Honeywell

MICRO SWITCH™ Standard Subminiature Snap-Action Z Series

Snap-Action Switches

DESCRIPTION

The industry-defining name in snap-action switches, Honeywell MICRO SWITCH™ standard subminiatures are designed for repeatability and enhanced product life. The MICRO SWITCH™ Z Series combines small size and light weight with ample electrical capacity, low cost, and enhanced life.

The MICRO SWITCH™ Z Series consists of six product families with unique features that can drop right into an application.

These reliable and rugged switches offer a variety of actuators, terminations, circuitry configurations, electrical ratings, contact materials, operating characteristics, and sealing allows them to be utilized in numerous potential applications.

Carefully manufactured and thoroughly inspected, the MICRO SWITCH™ Z Series standard subminiatures are a great value for applications requiring sensing presence or absence of an object.

FEATURES

- Small size and light weight switches lend themselves to numerous potential applications
- Choice of low energy or power-duty electrical ratings allow the switch to be specified in more types of applications
- Broad range of amp ratings (from 0.1 A to 10.1 A)
- Watertight IP67 sealing available on some listings allows the switch to be used where sealing and presence/absence detection is required
- UL/CSA, cUL, ENEC, and CE approvals

POTENTIAL APPLICATIONS

- **Industrial:** Appliances, communication equipment, computers, electromechanical timers, mechanical cam assemblies (timers), office equipment, electric tools, HVAC wall controls, instrumentation, valves, vending machines
- **Transportation:** Automotive, truck, and boat wire harnesses; sub-assemblies for convertible roofs; lock modules for tail-gate/trunk; tank and hood latch detection
- **Medical:** Medical and hospital beds, foot pedal controls, and chair lifts
- Applications where a pre-wired sealed on/off switch is required

MICRO SWITCH™ Standard Subminiature Snap-Action Z Series

SPECIFICATIONS

SERIES	**ZM (coil internal spring)**	**ZM1 (flat internal spring)**	**ZV (coil spring)**
Differentiator	Integral lever, no ENEC, and an internal coil spring	Integral lever, ENEC, and a flat internal spring	Snap-on lever, ENEC, and coil spring
Use	Use when ENEC is not required and the lever needs to be better secured to the switch	Used when added forces of a flat snap spring, ENEC, and a secured lever are required	Use when ENEC and a snap-on lever are required
Potential applications	alarms, computers, food processors, gas detectors, humidifiers, joysticks, money sorters, water pumps	air conditioners, consumer electronics, gas detectors, humidifiers, telephones, time recorders, toys	air conditioners, computers, consumer appliances, gas detectors, joysticks, money sorters, telephones, toys
Ampere rating	0.1 A, 5 A, 10.1 A	0.1 A, 3 A, 6 A, 10.1 A	0.1 A, 6 A, 10.1 A
Circuitry	SPDT, SPNO	SPDT, SPNO, SPNC	SPDT, SPNO, SPNC
Operating force	0.18 oz to 8.78 oz	12 gf to 355 gf	0.78 oz to 11.01 oz
Termination	Quick connect, solder, pcb	Quick connect, solder, pcb	quick connect, solder, pcb
Actuator	Pin plunger, straight, roller, sim. roller, L-shaped	Pin plunger, straight, roller, sim. roller, L-shaped	pin plunger, straight, roller, sim. roller
Voltage	125 Vac, 250 Vac, 30 Vdc	125 Vac, 250 Vac	125 Vac/125 Vdc 6(2) A 250 Vac
Agency approvals	UL, CE, CSA	UL, cUL, ENEC	UL, CE, CSA, ENEC
Agency file info	CE: 61058-1; UL: E12252; CSA: LR212438	UL: E12252; c-UL: E12252	CE: 61058-1; UL:12252; c-UL: E12252
Operating temperature	-40 °C to 120 °C [-40 °F to 248 °F]	-40 °C to 120 °C [-40 °F to 248 °F]	-40 °C to 120 °C [-40 °F to 248 °F]
Contacts	Silver, gold-plated silver, gold-plated brass, silver-tin-indium oxide	Silver, gold-plated silver, gold-plated brass, silver-tin-indium oxide	Silver, gold-plated silver, silver-tin-indium oxide
Housing	Polyamide (nylon)	Polyamide (nylon)	Polyamide (nylon)
Sealing	None		
Storage humidity	85 % RH max. at 40 °C [104 °F]		
Dielectric strength	1000 Vac (50 Hz to 60 Hz) between contacts, between terminals and ground, for one minute	1000 Vac (50 Hz to 60 Hz)/min	1000 Vac (50 Hz to 60 Hz) between contacts, between terminals and ground, for one minute
Contact resistance	300 mOhm max.	300 mOhm max.	300 mOhm max.
Insulation resistance	100 mOhm min. (at 500 Vdc/min)	100 mOhm min. (at 250 Vdc/min)	100 mOhm min. (at 500 Vdc/min)
Vibration	10 Hz to 55 Hz, displacement 0,75 mm (p-p)		
Expected mechanical life	10 million min.	10 million min. @ <10 A; 1 million min. @ 10 A	10 million min.
Electrical service life	Min. 1,000,000 operations on resistive load current 0.1 A at 125 Vac; 0.1 A at 30 Vdc; Min. 6,000 operations on resistive load 5 A at 125/250 Vac	Min. 10,000 operations	Min. 1,000,000 operations @ 0.1 A; Min 10,000 operations on resistive and motor load current 6(2) A 250 Vac
Electrical operating frequency	0.1 A – 120 operations/min other – 10 to 30 operations/min	10 to 30 operations/min	0.1 A – 120 operations/min; Other – 10 to 30 operations/min
Mechanical operation frequency	120 operations/min.		

Snap-Action Switches

SERIES	**ZW (water-tight)**	**ZD (water-tight)**	**ZX**
Differentiator	IP67 rating with lead wires; snap-on lever, coil spring, and ENEC	Smaller sized (like the ZX), sealed to IP67 (with leadwires only); plunger travel can be restricted, offers side-post quick mounting	Two-thirds the size of the ZM Series; unsealed, integral lever, and coil spring
Use	Use when a sealed position switch in a small and cost-effective package is required	Use for automotive applications due to sealing and quick mounting option	Use when a much smaller unsealed position switch is required
Potential applications	air conditioners, computers, consumer appliances, gas detectors, joysticks, money sorters, telephones, toys	automotive (operation systems and engine area interior), air conditioners, communication, electric toothbrushes, toys	calculators, computer mouse, cordless phones, electric knife & stapler, tester machines, walkie-talkies
Ampere rating	0.1 A. 5 A	0.1 A, 3 A	0.1 A. 3 A
Circuitry	SPDT, SPNO, SPNC	SPDT	SPDT
Operating force	1.94 oz to 7.16 oz	130 gf to 195 gf	0.53 oz to 5.3 oz
Termination	quick connect, solder, cable bottom exit, cable side exit	Solder, pcb straight, pcb left angle, pcb right angle, pre-wired	solder, pcb snap-in, pcb left angle, pcb right angle
Actuator	pin plunger, straight, roller, sim. roller	Pin plunger, straight, sim. roller	pin plunger, straight, roller, special
Voltage	125 Vac, 250 Vac	125 Vac, 12 Vdc	125 Vac , 48 Vdc
Agency approvals	UL, cUL, CE, ENEC	UL, cUL, CE, ENEC	UL, CE, CSA
Agency file info	CE: 61058-1; UL: E12252; c-UL: E12252	UL: E12252; c-UL: E12252	CE: 61058-1; UL:12252; CSA: LR212438
Operating temperature	-40 °C to 120 °C [-40 °F to 248 °F] (w/o wires) -40 °C to 105 °C [-40 °F to 221 °F] (w/ wires)	-40 °C to 120 °C [-40 °F to 248 °F]	-40 °C to 120 °C [-40 °F to 248 °F]
Contacts	silver, gold-plated silver	Silver, gold-plated silver	silver, gold-plated silver
Housing	PBT polyester thermoplastic	PBT polyester thermoplastic	Polyamide (nylon)
Sealing	IP67 (with leadwires only)	IP67 (with leadwires only)	None
Storage humidity	85 % RH max. at 40 °C [104 °F]		
Dielectric strength	1000 Vac (50 Hz to 60 Hz) between contacts and 1250 Vac (50 Hz to 60 Hz), between terminals and ground, for one minute	150 Vac (50 Hz to 60 Hz)/minute between contacts, 500 Vac (50 Hz to 60 Hz)/minute between live parts and dead metal parts	1000 Vac (50 Hz to 60 Hz) between contacts, between terminals and ground, for one minute
Contact resistance	30 mOhm max.	100 mOhm max.	100 mOhm max.
Insulation resistance	100 mOhm min. (at 500 Vdc/min)	100 mOhm min. (at 250 Vdc/min)	100 mOhm min. (at 500 Vdc/min)
Vibration	10 Hz to 55 Hz, displacement 0,75 mm (p-p)		
Expected mechanical life	2 million min.	500,000 min.	1 million min.
Electrical service life	Min. 10,000 operations	Min. 500,000 operations on resistive load current 10 mA; Min. 6000 operations on resistive load current 3 A	Min. 1,000,000 operations on resistive load current 0.1 A at 48 Vdc; Min. 10,000 operations on resistive load current 3 A at 125 Vac
Electrical operating frequency	10 to 30 operations/min	10 mA – 120 operations/min 3 A – 10 to 30 operations/min	0.1 A – 120 operations/min 3 A – 10 to 30 operations/min
Mechanical operation frequency	120 operations/min.		

MICRO SWITCH™ Standard Subminiature Snap-Action Z Series

ZM AND ZM1 STANDARD LEVER OPTIONS & DIMENSIONS mm/in

Lever/ Terminals	Dimensions	Lever/ Terminals	Dimensions
Pin plunger/ solder	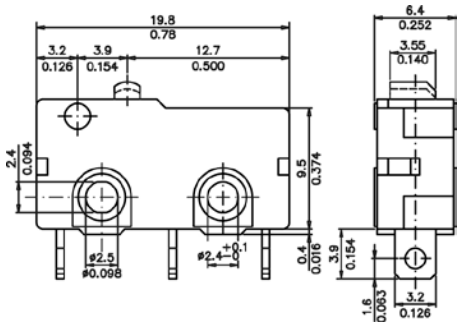 OP: 11,4 mm ±0,3 mm [0.449 in ± 0.012 in] DT: 0,2 mm [0.008 in max.]	Pin plunger/ quick connect	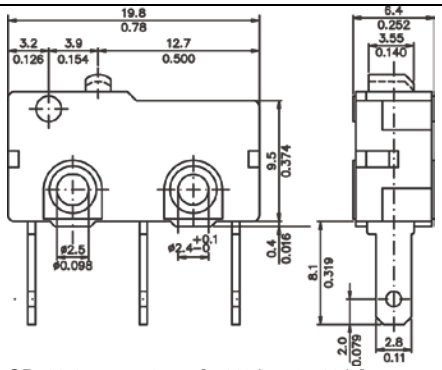 OP: 11,4 mm ±0,3 mm [0.449 in ± 0.012 in] DT: 0,2 mm [0.008 in max.]
Pin plunger/ PCB right	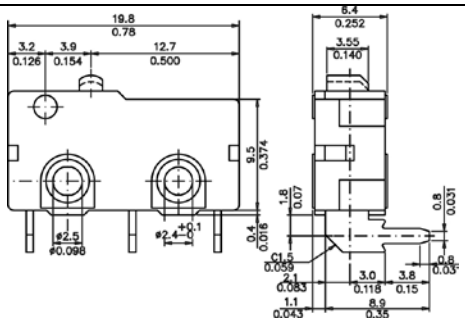 OP: 11,4 mm ±0,3 mm [0.449 in ± 0.012 in] DT: 0,2 mm [0.008 in max.]	Pin plunger/PCB	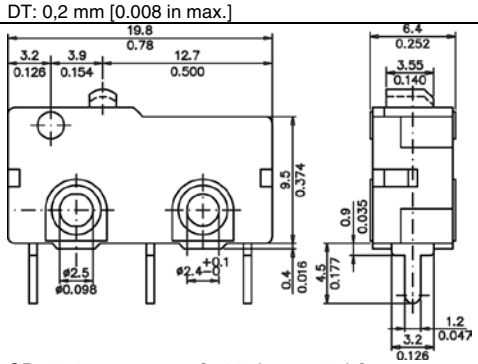 OP: 11,4 mm ±0,3 mm [0.449 in ± 0.012 in] DT: 0,2 mm [0.008 in max.]
Simulated roller/quick connect	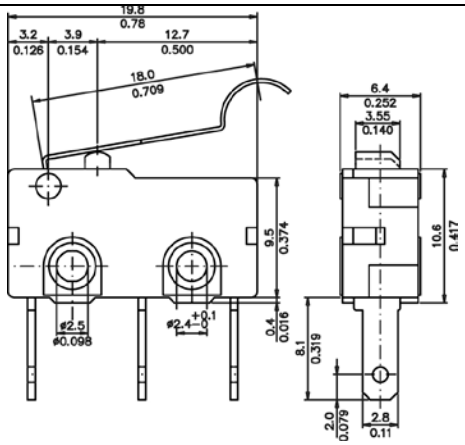 OP: 15,1 mm ±1,5 mm [0.591 in ± 0.059 in] DT: 0,9 mm [0.035 in max.]	Simulated roller/solder	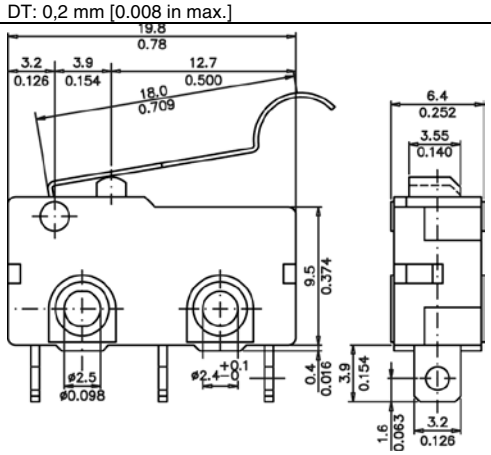 OP: 15,1 mm ±1,5 mm [0.591 in ± 0.059 in] DT: 0,9 mm [0.035 in max.]

Continued – **ZM AND ZM1 STANDARD LEVER OPTIONS & DIMENSIONS mm/in**

Lever/ Terminals	Dimensions	Lever/ Terminals	Dimensions
Roller/solder	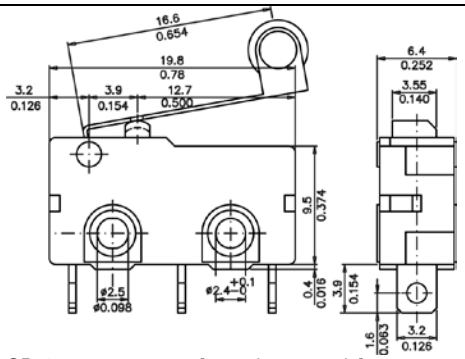 OP: 17,5 mm ±0,8 mm [0.689 in ± 0.032 in] DT: 0,81 mm [0.032 in max.]	Straight/ solder	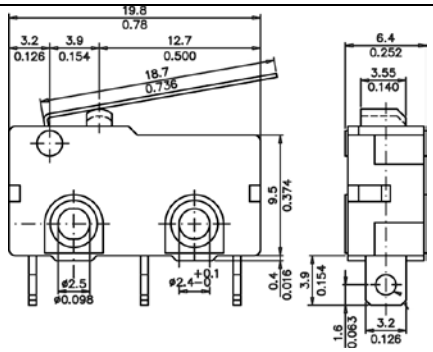 OP: 11,8 mm ±0,89 mm [0.465 in ± 0.035 in] DT: 0,81 mm [0.032 in max.]
Roller/ quick connect	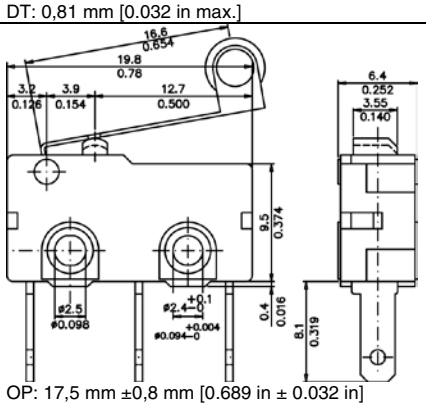 OP: 17,5 mm ±0,8 mm [0.689 in ± 0.032 in] DT: 0,81 mm [0.032 in max.]	Roller/PCB	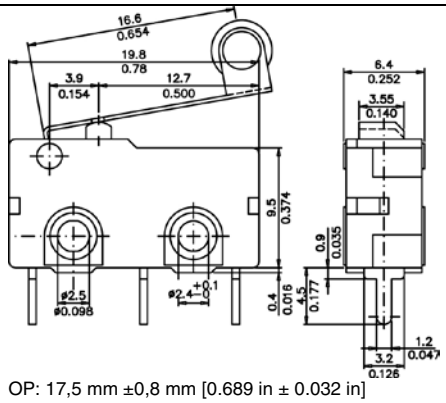 OP: 17,5 mm ±0,8 mm [0.689 in ± 0.032 in] DT: 0,81 mm [0.032 in max.]
Straight/PCB right	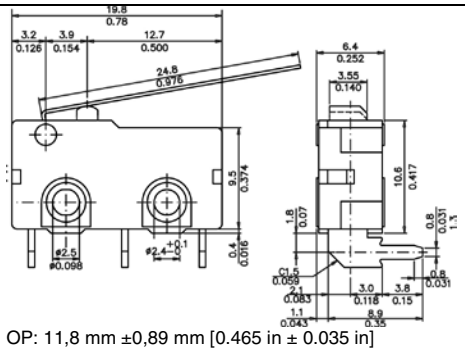 OP: 11,8 mm ±0,89 mm [0.465 in ± 0.035 in] DT: 0,81 mm [0.032 in max.]	Straight/PCB left	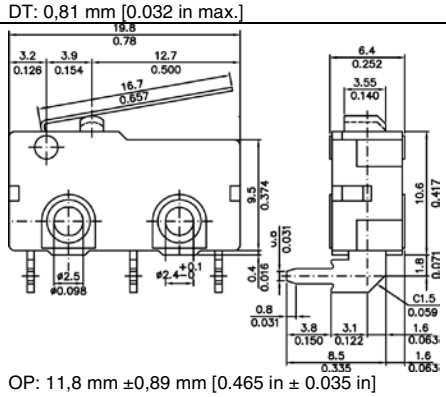 OP: 11,8 mm ±0,89 mm [0.465 in ± 0.035 in] DT: 0,81 mm [0.032 in max.]
Straight/ quick connect	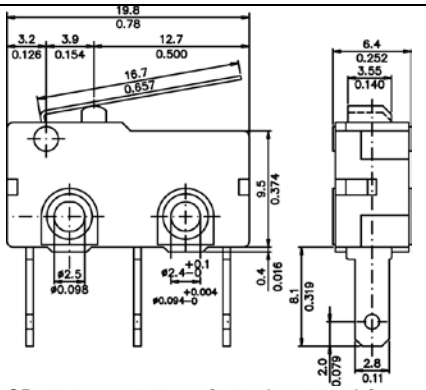 OP: 11,8 mm ±0,89 mm [0.465 in ± 0.035 in] DT: 0,81 mm [0.032 in max.]		

MICRO SWITCH™ Standard Subminiature Snap-Action Z Series

ZV STANDARD LEVER OPTIONS & DIMENSIONS mm/in

Lever/ Terminals	Dimensions	Lever/ Terminals	Dimensions
Pin plunger/ quick connect	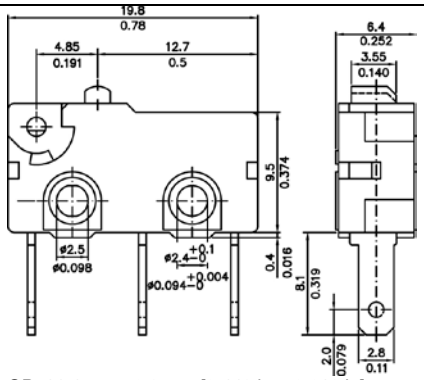 OP: 11,4 mm ±0,3 mm [0.449 in ± 0.012 in] DT: 0,2 mm [0.008 in max.]	Pin plunger/ solder	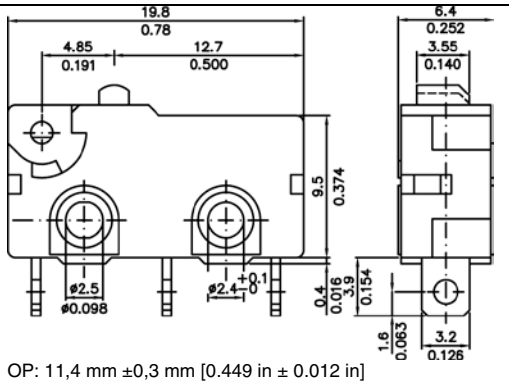 OP: 11,4 mm ±0,3 mm [0.449 in ± 0.012 in] DT: 0,2 mm [0.008 in max.]
Straight/ solder	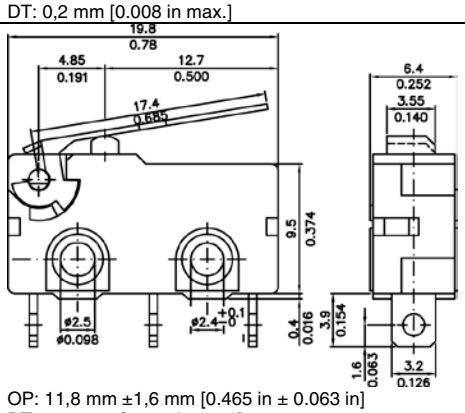 OP: 11,8 mm ±1,6 mm [0.465 in ± 0.063 in] DT: 0,81 mm [0.032 in max.]	Roller/solder	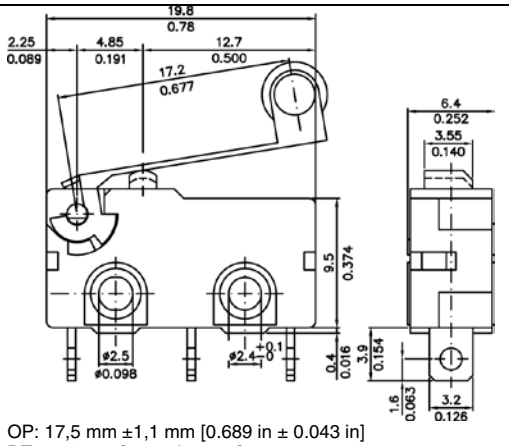 OP: 17,5 mm ±1,1 mm [0.689 in ± 0.043 in] DT: 0,81 mm [0.032 in max.]
Straight/ quick connect	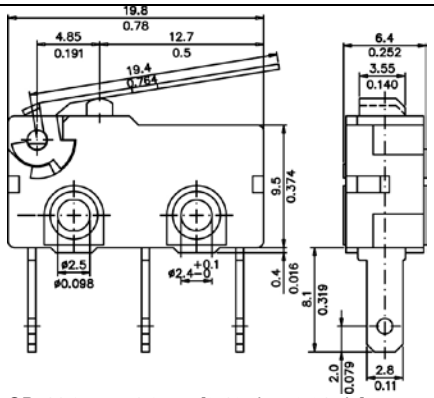 OP: 11,8 mm ±1,2 mm [0.465 in ± 0.047 in] DT: 0,81 mm [0.032 in max.]	Roller/ quick connect	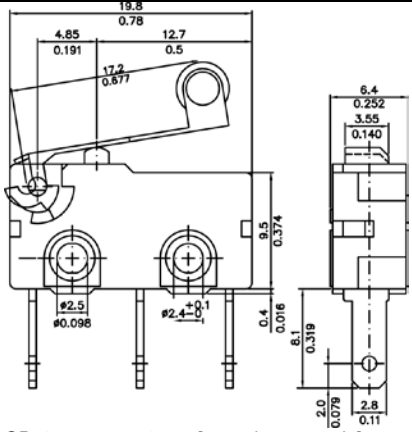 OP: 17,5 mm ±1,1 mm [0.689 in ± 0.043 in] DT: 0,81 mm [0.032 in max.]

ZW STANDARD LEVER OPTIONS & DIMENSIONS mm/in

Lever/Term.	Dimensions
Straight/ solder angled	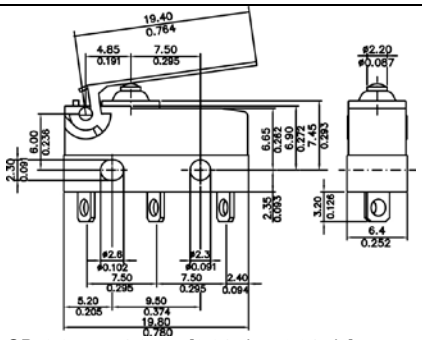 OP: 8,8 mm ±1,2 mm [0.347 in ± 0.047 in] DT: 0,71 mm [0.028 in max.]
Roller/cable bottom exit	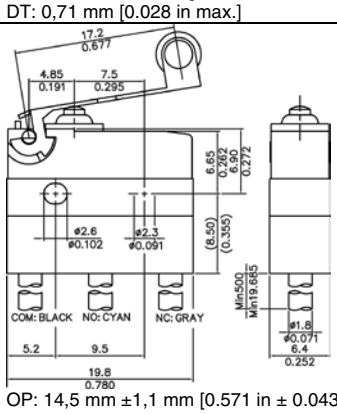 OP: 14,5 mm ±1,1 mm [0.571 in ± 0.043 in] DT: 0,6 mm [0.024 in max.]
Pin plunger/ solder angled	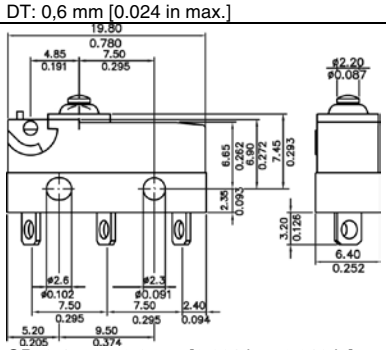 OP: 8,4 mm ±0,3 mm [0.331 in ± 0.012 in] DT: 0,2 mm [0.008 in max.]
Roller/quick connect	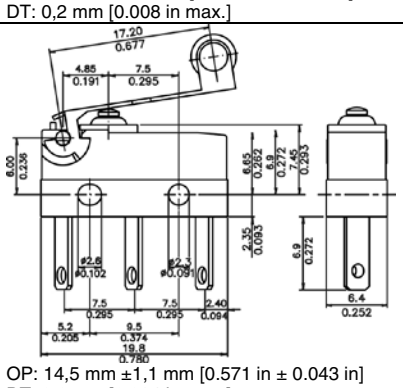 OP: 14,5 mm ±1,1 mm [0.571 in ± 0.043 in] DT: 0,6 mm [0.024 in max.]

ZD STANDARD LEVER OPTIONS & DIMENSIONS mm/in

Lever/ Terminals	Dimensions
Pin plunger/ solder terminals	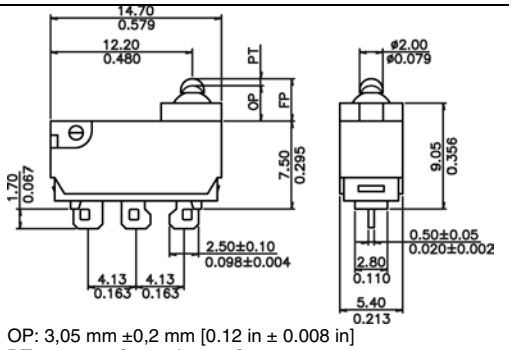 OP: 3,05 mm ±0,2 mm [0.12 in ± 0.008 in] DT: 0,30 mm [0.012 in max.]
Pin plunger/PCB straight terminals	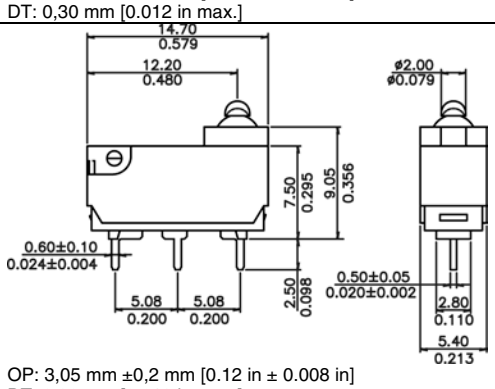 OP: 3,05 mm ±0,2 mm [0.12 in ± 0.008 in] DT: 0,30 mm [0.012 in max.]
Pin plunger/wire leads	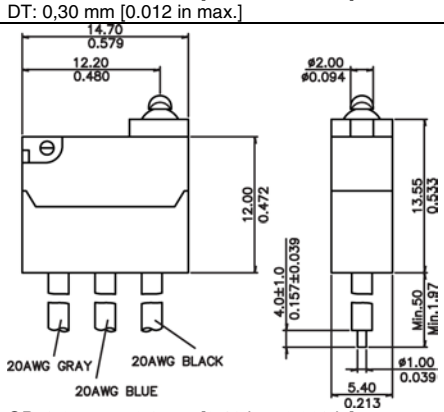 OP: 3,05 mm ±0,2 mm [0.12 in ± 0.008 in] DT: 0,30 mm [0.012 in max.]

MICRO SWITCH™ Standard Subminiature Snap-Action Z Series

ZX STANDARD LEVER OPTIONS & DIMENSIONS mm/in

Lever/ Terminals	Dimensions	Lever/ Terminals	Dimensions
Pin plunger/ solder	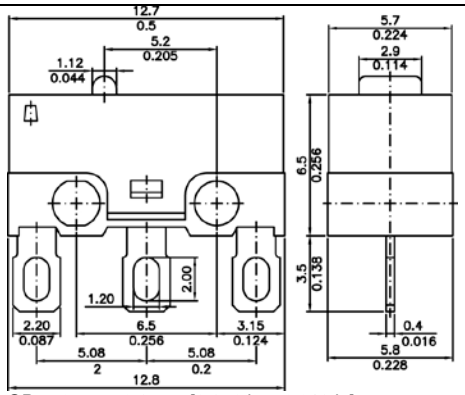 OP: 7,0 mm ±0,3 mm [0.276 in ± 0.012 in] DT: 0,30 mm [0.012 in max.]	Straight/ Solder	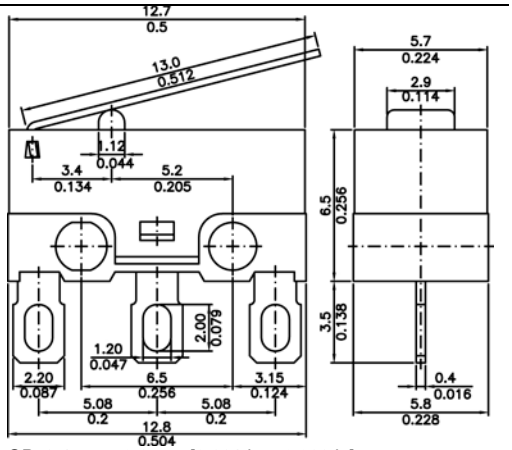 OP: 8,4 mm ±0,8 mm [0.331 in ± 0.032 in] DT: 1,3 mm [0.051 in max.]
Pin plunger/PCB	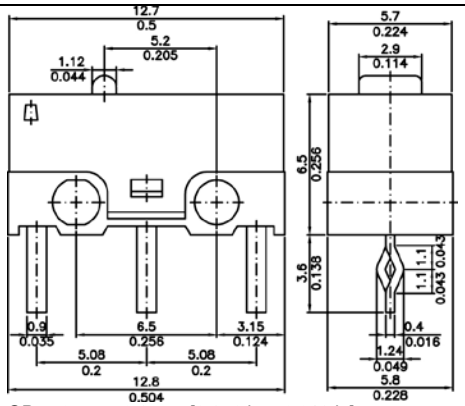 OP: 7,0 mm ±0,3 mm [0.276 in ± 0.012 in] DT: 0,30 mm [0.012 in max.]	Straight/PCB	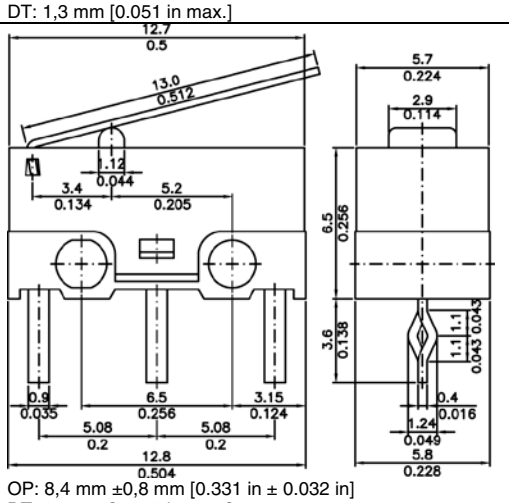 OP: 8,4 mm ±0,8 mm [0.331 in ± 0.032 in] DT: 1,3 mm [0.051 in max.]
Simulated roller/solder	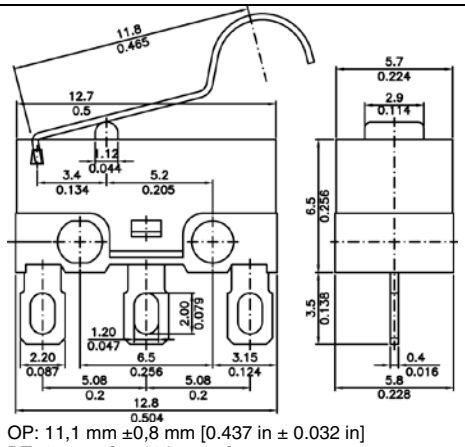 OP: 11,1 mm ±0,8 mm [0.437 in ± 0.032 in] DT: 1,3 mm [0.051 in max.]	Simulated roller/PCB	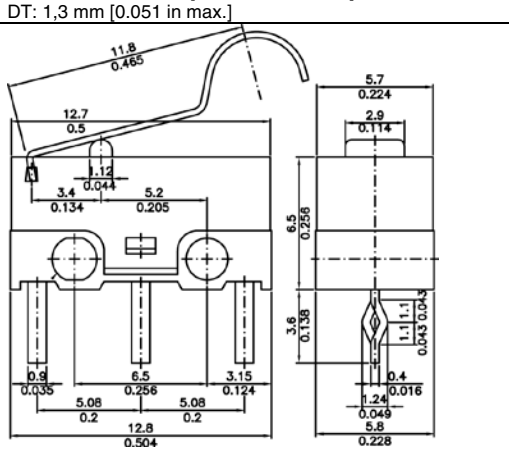 OP: 11,1 mm ±0,8 mm [0.437 in ± 0.032 in] DT: 1,3 mm [0.051 in max.]

ZM SERIES NOMENCLATURE TREE

ZM	50	E	10	A	01	

Switch type (Notes 1, 4)

ZM Series Subminiature	

Current rating

10	0.1 A: 125 Vac (gold-plated)
50	5 A: 125/250 Vac
90	10.1 A: 125/250 Vac (Note 2)

Operating force *(at pin plunger)*

B	60 g max.
D	104 g max.
E	146 g max.
G	249 g max.

ONLY

Terminal type

10	Solder straight
20	PCB straight
50	PCB right angle
60	PCB left angle
70	Quick connect 0.110 in
99	Special (Note 3)

Actuator type (Note 5) *(integral levers)*

A	Pin plunger
B	Short straight lever 16,7 [0.66]
C	Standard straight lever 18,7 [0.74]
D	Long straight lever 24,8 [0.98]
K	Longer straight lever 35,2 [1.39]
J	Longest straight lever 55,2 [2.17]
F	Roller lever 16,6 [0.65]
H	Small simulated roller lever 17,9 [0.71]
E	Standard simulated roller lever 18,0 [0.71]
M	Large simulated roller lever 21,1 [0.83]
L	L-shaped lever 31,5 [1.24]
S	Special lever (Note 3)

Circuitry

01	SPDT UL, CE, CSA
03	SPNO UL, CE, CSA
04	SPNC UL, CE, CSA

Special Designator

A special designator letter is used only when terminal type is "99" or actuator type is "S" to specify that the termination or the actuator of the switch is special. Review product specification to determine the exact differences.

NOTES

(1) Nomenclature is for identification purposes only, not all combinations are possible. Variations not set up would require minimum volumes to establish.
(2) Switches with 10.1 A rating are only available with "G" operating force.
(3) Terminal type "99" or actuator type "S" designates a special and therefore requires a special designator letter at the end of the listing.
(4) Establishing new nomenclature may require notification to UL and European approvals agencies.
(5) Lever length dimension is measured as follows: straight lever - from the center line of the pivot to the end of the plunger; roller lever or simulated roller lever - from the center line of the pivot point to the center line of the roller diameter.

ZM1 SERIES NOMENCLATURE TREE

ZM1	50	C	10	A	01	

Switch type (Note 1)

ZM1 Series Subminiature	

Current rating

10	0.1 A: 125 Vac (gold-plated)
50	3 A: 125/250 Vac
60	6 A: 125/250 Vac
90	10.1 A: 125/250 Vac (Note 2)

Operating force *(at pin plunger)*

C	150 g max.

Terminal type

10	Solder straight
20	PCB straight
50	PCB right angle
60	PCB left angle
70	Quick connect 0.110 in
99	Special (Note 3)

Actuator type *(integral levers)*

A	Pin plunger
B	Short straight lever 14,6 [0.57]
C	Standard straight lever 16,6 [0.65]
D	Long straight lever 22,7 [0.89]
E	Standard simulated roller lever
F	Roller lever
H	Small simulated roller lever
J	Longest straight lever 52,9 [2.08]
K	Long straight lever 33,1 [1.30]
L	L-shaped lever
M	Large simulated roller lever
S	Special lever (Note 3)

Circuitry

01	SPDT UL, cUL, ENEC
03	SPNO UL, cUL, ENEC
04	SPNC UL, cUL, ENEC

Special Designator

A special designator letter is used only when terminal type is "99" or actuator type is "S" to specify that the termination or the actuator of the switch is special. Review product specification to determine the exact differences.

NOTES

(1) Nomenclature is for identification purposes only, not all combinations are possible. Variations not set up would require minimum volumes to establish.
(2) Switches with 10.1 A rating are only available with "G" operating force.
(3) Terminal type "99" or actuator type "S" designates a special and therefore requires a special designator letter at the end of the listing.

MICRO SWITCH™ Standard Subminiature Snap-Action Z Series

ZV SERIES NOMENCLATURE TREE

ZV	50	D	10	A	01	

Switch type (Notes 1, 4)

ZV Series Subminiature	

Current rating

10	0.1 A: 125 Vac
50	6 A: 125/250 Vac
90	10.1 A: 125/250 Vac (Note 2)

Operating force *(at pin plunger)*

B	60 g max.
D	104 g max.
E	146 g max.
G	249 g max. (ONLY)
H	312 g max. (ONLY)

Terminal type

10	Solder straight
20	PCB straight
50	PCB right angle
60	PCB left angle
70	Quick connect 0.110 in
99	Special (Note 3)

Actuator type *(levers mounted externally)*

A	Pin plunger
B	Short straight lever 17,4 [0.69]
C	Standard straight lever 19,4 [0.76]
D	Long straight lever 25,5 [1.00]
E	Simulated roller lever 18,65 [0.73]
F	Roller lever 17,2 [0.68]
H	Small simulated roller lever 18,6 [0.73]
P	Plastic lever 25,7 [1.012]
S	Special lever (Note 3)

Circuitry

01	SPDT UL, cUL, ENEC
03	SPNO UL, cUL, ENEC
04	SPNC UL, cUL, ENEC

Special Designator

A special designator letter is used only when terminal type is "99" or actuator type is "S" to specify that the termination or the actuator of the switch is special. Review product specification to determine the exact differences.

NOTES

(1) Nomenclature is for identification purposes only, not all combinations are possible. Variations not set up would require minimum volumes to establish.
(2) Switches with 10.1 A rating should only use "G" or "H" operating force.
(3) Terminal type "99" or actuator type "S" designate a special termination and therefore requires a special designator letter at the end of the listing.
(4) Establishing new nomenclature may require notification to UL and European approvals agencies.

ZW SERIES NOMENCLATURE TREE

ZW	50	F	15	A	D	1	

Switch type (Notes 1, 3)

ZW Series Sealed Subminiature	

Current rating

10	0.1 A: 125/250 Vac (gold-plated)
50	5 A: 125/250 Vac 6 A: 125/250 Vac (silver)

Operating force *(at pin plunger)*

E	150 g max.
F	203 g max. (ONLY)

Terminal type

15	Solder (angled)
20	PCB straight
70	Quick connect 0.110 in x 0.20 in
90	Cable-bottom exit 500 mm (UL1007 dia 1,8 [0.07])
91	Cable-side exit (opposite plunger) 500 mm (UL1007 dia 1,8 [0.07])
92	Cable-side exit (plunger side) 500 mm (UL1007 dia 1,8 [0.07])
99	Special (Note 2)

Actuator type *(levers mounted externally)*

A	Pin plunger
B	Short straight lever 17,4 [0.69]
C	Standard straight lever 19,4 [0.76]
D	Long straight lever 25.5 [1.00]
F	Roller lever 17,2 [0.68]
H	Small simulated roller lever 18,5 [0.73]
J	Longest straight lever 55,9 [2.2]
E	Simulated roller lever
S	Special lever (Note 2)

Construction

D	Dust tight - IP00, no wires
W	Water tight - IP67, 19.7 in wires, 20ga

Circuitry

1	SPDT UL, cUL, ENEC
3	SPNO only Wired versions
4	SPNC only Wired versions

Special Designator

A special designator letter is used only when terminal type is "99" or actuator type is "S" to specify that the termination or the actuator of the switch is special. Review product specification to determine the exact differences.

NOTES

(1) Nomenclature is for identification purposes only, not all combinations are possible. Variations not set up would require minimum volumes to establish.
(2) Terminal type "99" or actuator type "S" designates a special and therefore requires a special designator letter at the end of the listing.
(3) Establishing new nomenclature may require notification to UL and European approvals agencies.

ZD SERIES (NO WIRES) NOMENCLATURE TREE

ZD	20	S	10	A	0	1	

Switch type (Notes 1, 3)

ZD Series Subminiature	

Current rating

20	10 mA: 12 Vdc (gold-plated)
30	3 A: 12 Vdc/125 Vac (silver)

Operating force *(at pin plunger)*

S	130 g max.

Terminal type

10	Solder straight
20	PCB straight
50	PCB right angle
60	PCB left angle
99	Special (Note 2)

Actuator type

A	Pin plunger
C	Straight lever 15 mm
H	Simulated roller lever 18,6 mm
S	Special (Note 2)

Circuitry

0	SPDT UL, cUL, ENEC

Pillar and Travel

1	No pillar short travel
2	Left pillar short travel
3	Right pillar short travel
4	No pillar long travel
5	Left pillar long travel
6	Right pillar long travel

Special Designator

A special designator letter is used only when terminal type is "99" or actuator type is "S" to specify that the termination or the actuator of the switch is special. Review product specification to determine the exact differences.

NOTES

(1) Nomenclature is for identification purposes only, not all combinations are possible. Variations not set up would require minimum volumes to establish.
(2) Terminal type "99" or actuator type "S" designates a special and therefore requires a special designator letter at the end of the listing.
(3) Ratings: Sealing rated IP00

ZD SERIES (WITH WIRES) NOMENCLATURE TREE

ZD	20	S	A	0	1	E	A	Blank or 001
Switch type (Notes 1, 2)	Current rating	Operating force (at pin plunger)	Actuator type	Circuitry	Pillar and Travel	AWG type	UL number	Serial code
ZD Series Subminiature IP67 Sealed with Lead Wires	**20** 10 mA: 12 Vdc (gold-plated)	**S** 130 g max.	**A** Pin plunger	**0** SPDT UL, cUL, ENEC	**1** No pillar short travel	**E** 20	**A** UL1007	Special designator
	30 3 A: 12 Vdc/125 Vac (silver)		**C** Straight lever 15 mm	**3** SPNO UL, cUL, ENEC	**2** Left pillar short travel	**F** 22		
			H Simulated roller lever 18,6 mm	**4** SPNC UL, cUL, ENEC	**3** Right pillar short travel	**G** 24		
			S Special (Note 2)		**4** No pillar long travel	**H** 26		
					5 Left pillar long travel			
					6 Right pillar long travel			
					7 No pillar, with mounting hole tab			

NOTES
(1) Nomenclature is for identification purposes only, not all combinations are possible.
Variations not set up would require minimum volumes to establish.
(2) Terminal type "99" or actuator type "S" designates a special and therefore requires a special designator letter at the end of the listing.

ZX SERIES NOMENCLATURE TREE

ZX	10	E	10	A	01	
Switch type (Notes 1, 3)	Current rating	Operating force	Terminal type	Actuator type (integral levers)	Circuitry	Special Designator
ZX Series Subminiature	**10** 0.1 A: 48 Vdc (gold-plated)	**C** 90 g max.	**10** Solder straight	**A** Pin plunger	**01** SPDT UL,CSA	A special designator letter is used only when terminal type is "99" or actuator type is "S" to specify that the termination or the actuator of the switch is special. Review product specification to determine the exact differences.
	40 3 A: 125 Vac (silver)	**E** 150 g max.	**20** PCB straight	**B** Short straight lever 10,0 [0.39]		
			30 PCB snap-in	**C** Standard straight lever 13,0 [0.51]		
			50 PCB right angle	**E** Simulated roller lever 11,8 [0.47]		
			60 PCB left angle	**G** Small simulated roller lever 10,0 [0.39]		
			99 Special (Note 2)	**H** Small simulated roller lever 15,0 [0.59]		
				J Longest straight lever 30,0 [1.18]		
				S Special lever (Note 2)		

NOTES
(1) Nomenclature is for identification purposes only, not all combinations are possible.
Variations not set up would require minimum volumes to establish.
(2) Terminal type "99" or actuator type "S" designates a special and therefore requires a special designator letter at the end of the listing.
(3) Establishing new nomenclature may require notification to UL and European approvals agencies.

⚠ WARNING

PERSONAL INJURY

DO NOT USE these products as safety or emergency stop devices or in any other application where failure of the product could result in personal injury.

Failure to comply with these instructions could result in death or serious injury.

⚠ WARNING

MISUSE OF DOCUMENTATION

- The information presented in this product sheet is for reference only. Do not use this document as a product installation guide.
- Complete installation, operation, and maintenance information is provided in the instructions supplied with each product.

Failure to comply with these instructions could result in death or serious injury.

WARRANTY/REMEDY

Honeywell warrants goods of its manufacture as being free of defective materials and faulty workmanship. Honeywell's standard product warranty applies unless agreed to otherwise by Honeywell in writing; please refer to your order acknowledgement or consult your local sales office for specific warranty details. If warranted goods are returned to Honeywell during the period of coverage, Honeywell will repair or replace, at its option, without charge those items it finds defective. **The foregoing is buyer's sole remedy and is in lieu of all other warranties, expressed or implied, including those of merchantability and fitness for a particular purpose. In no event shall Honeywell be liable for consequential, special, or indirect damages.**

While we provide application assistance personally, through our literature and the Honeywell web site, it is up to the customer to determine the suitability of the product in the application.

Specifications may change without notice. The information we supply is believed to be accurate and reliable as of this printing. However, we assume no responsibility for its use.

SALES AND SERVICE

Honeywell serves its customers through a worldwide network of sales offices, representatives and distributors. For application assistance, current specifications, pricing or name of the nearest Authorized Distributor, contact your local sales office or:

E-mail: info.sc@honeywell.com

Internet: www.honeywell.com/sensing

Phone and Fax:

Asia Pacific	+65 6355-2828
	+65 6445-3033 Fax
Europe	+44 (0) 1698 481481
	+44 (0) 1698 481676 Fax
Latin America	+1-305-805-8188
	+1-305-883-8257 Fax
USA/Canada	+1-800-537-6945
	+1-815-235-6847
	+1-815-235-6545 Fax

Sensing and Control
Honeywell
1985 Douglas Drive North
Golden Valley, MN 55422
www.honeywell.com/sensing

Honeywell

004954-1-EN IL50 GLO Printed in USA
July 2010
Copyright © 2010 Honeywell International Inc. All rights reserved.