Energy Management Power Analyzer Type WM14-96 "Basic Version"

CARLO GAVAZZI

- Optional dual pulse output
- Alarms (visual only) V_{LN}, An
- Optional galvanically insulated measuring inputs

- Class 1 (active energy)
- Class 2 (reactive energy)
- Accuracy ±0.5 F.S. (current/voltage)
- Power analyzer
- Display of instantaneous variables: 3x3 digit
- Display of energies: 8+1 digit
- System variables and phase measurements: W, W_{dmd}, var, VA, VA_{dmd}, PF, V, A, An, A_{dmd}, Hz
- A_{max}, $A_{dmd\ max}$, $W_{dmd\ max}$ indication
- Energy measurements: kWh and kvarh
- Hour counter (5+2 DGT)
- TRMS meas. of distorted sine waves (voltages/currents)
- Power supply: 24V, 48V, 115V, 230V, 50-60Hz; 18 to 60VDC
- Protection degree (front): IP65
- Front dimensions: 96x96mm
- Optional RS422/485 serial port

Product Description

3-phase power analyzer with built-in programming key-pad. Particularly recommended for displaying the main electrical variables. Housing for panel mounting, (front) protection degree IP65, and optional RS485 serial port or dual pulse output. Parameters programmable by means of CptBSoft.

How to order

WM14-96 AV5 3 D PG

- Model
- Range code
- System
- Power supply
- Option

How to order

CptBSoft

CptBSoft (compatible only with S or SG options): software to program the working parameters of the power analyzer and to read the energy and the instantaneous variables.

Type Selection

Range codes

AV5: 380/660V_{L-L}/5(6)AAC
VL-N: 185 V to 460 V
VL-L: 320 V to 800 V

AV6: 120/208V_{L-L}/5(6)AAC
VL-N: 45 V to 145 V
VL-L: 78 V to 250 V

Phase current: 0.03A to 6A
Neutral current: 0.09 to 6A

System

3 : 1-2-3-phase, balanced/unbalanced load,with or without neutral

Power supply

A: 24VAC -15+10%, 50-60Hz
B: 48VAC -15+10%, 50-60Hz
C: 115VAC -15+10%, 50-60Hz
D: 230VAC -15+10%, 50-60Hz
3: 18 to 60VDC (not available in case of SG or PG options)

Options

X: None
S: RS485 port
SG: RS485+galvanic insulated measurig inputs
PG: Dual pulse output + galvanically insulated measuring inputs.

Input specifications

Rated inputs	
Current "X-S options"	3 (non insulated each other)
Current "SG-PG options"	3 (insulated each other)
Voltage	4
Accuracy (display, RS485) (@25°C ±5°C, R.H. ≤60%)	with CT=1 and VT=1 AV5: 1150W-VA-var, FS:230VLN, 400VLL; AV6: 285W-VA-var, FS:57VLN, 100VLL
Current	0.25 to 6A: ±(0.5% FS +1DGT) 0.03A to 0.25A: ±(0.5% FS+7DGT)
Neutral current	0.25 to 6A: ±(1.5% FS +1DGT) 0.09A to 0.25A: ±(0.5% FS+7DGT)
Phase-phase voltage	±(1.5% FS +1 DGT)
Phase-neutral voltage	±(0.5% FS + 1 DGT)
Active and Apparent power,	0.25 to 6A: ±(1% FS +1DGT); 0.03A to 0.25A: ±(1% FS +5DGT)
Reactive power	0.25 to 6A: ±(2% FS +1DGT); 0.03A to 0.25A: ±(2% FS +5DGT)
Active energy "X-S option"	Class 2 (start up "I": 30mA)
Reactive energy "X-S option"	Class 3 (start up "I": 30mA)
Active energy "SG-PG opt."	Class 1 (start up "I": 30mA)
Reactive energy "SG-PG opt."	Class 2 (start up "I": 30mA)
Frequency	±0.1Hz (48 to 62Hz)
Additional errors	
Humidity	≤0.3% FS, 60% to 90% RH
Temperature drift	≤ 200ppm/°C
Sampling rate	1400 samples/s @ 50Hz 1700 samples/s @ 60Hz
Display refresh time	700ms
Display	
Type	LED, 14mm
Read-out for instant. var.	3x3 DGT
Read-out for energies	3+3+3 DGT (Max indication: 999 999 99.9)

CARLO GAVAZZI

Input specifications (cont.)

Display (cont.)	
Read-out for hour counter	1+3+3 DGT (Max. indication: 9 999 9.99)
Measurements	Current, voltage, power, power factor, frequency, energy, TRMS measurement of distorted waves.
Coupling type	Direct
Crest factor	< 3, max 10A peak
Input impedance	**(X-S options)**
380/660V_{L-L} (AV5)	1 MΩ ±5%
120/208V_{L-L} (AV6)	453 KΩ ±5%
Current	≤ 0.02Ω
Input impedance	**(PG-SG options)**
380/660V_{L-L} (AV5)	1 MΩ ±1%
120/208V_{L-L} (AV6)	1 MΩ ±1%
Current	≤ 0.02Ω
Frequency	48 to 62 Hz
Overload protection	
Continuos voltage/current	1.2 F.S.
For 500ms: voltge/current	2 Un/36A

RS485 Serial Port Specifications

RS422/RS485 (on request)	
Type	Multidrop bidirectional (static and dynamic variables)
Connections	2 or 4 wires, max. distance 1200m, termination directly on the instrument
Addresses	1 to 255, key-pad selectable
Protocol	MODBUS/JBUS
Data (bidirectional)	
Dynamic (reading only)	System, phase variables and energies
Static (writing only)	All configuration parameters
Data format	1 bit di start , 8 data bit, no parity, 1 stop bit
Baud-rate	9600 bit/s

CptBSoft software: parameter programming and reading data

CptBSoft	Multi language software to program the working parameters of the power analyzer and to read the energies and the instantaneous variables. The program runs under Windows 95/98/98SE/2000/ NT/XP.
Working mode	Two different working modes can be selected: - management of a local RS485 network; - management of communication from a single instrument to PC (RS232);
Data access	By means of RS485 serial port.

Dual pulse output

Digital outputs (on request)	
Pulse outputs	
Number of outputs	2 (one for kWh one for kvarh)
Number of pulses	From 0.01 to 999 in compliance with the following formula: [**Psys max** (kW or kvar)***pulses** (pulses/kWh or kvarh)] **<14400**
Output type	Relay min current: 0.05A@250VAC/30VDC max current: 5A@250VAC/30VDC
	Electrical life: min $2*10^5$ cycles Mechanial life: $5*10^6$ cycles
Pulse duration	≥100ms <120ms (ON) ≥100ms (OFF) According to EN622053-31
Insulation	By means of relays, 4000 V_{RMS} outputs to measuring inputs, 4000 V_{RMS} output to supply input. Insulation between the two outputs: 1000V_{RMS}

CARLO GAVAZZI

Software functions

Password	Numeric code of max. 3 digits; 2 protection levels of the programming data
1st level	Password “0”, no protection
2nd level	Password from 1 to 999, all data are protected
System selection	3-phase with/without n, unbal. 3-phase balanced 3-phase ARON, unbalanced 2-phase Single phase
Transformer ratio	
CT	1 to 999
VT	1.0 to 99.9
Filter	
Operating range	0 to 100% of the input display scale
Filtering coefficient	1 to 16
Filter action	Measurements, alarms, serial out. (fundamental var: V, A, W and their derived ones).
Displaying	Up to 3 variables per page
3-phase system with neutral	Page 1: V L1, V L2, V L3 Page 2: V L12, V L23, V L31 Page 3: A L1, A L2, A L3 Page 4: A L1 dmd, A L2 dmd, A L3 dmd Page 5: An, An Alarm Page 6: W L1, W L2, W L3 Page 7: PF L1, PF L2, PF L3 Page 8: var L1, var L2, var L3 Page 9: VA L1, VA L2, VA L3 Page 10: VA Σ, W Σ, var Σ Page 11: VA dmd, W dmd, Hz Page 12: W dmd max (*) Page 13: Wh (*) Page 14: varh (*) Page 15: VL-L Σ, PF Σ, VLN Alarm Page 16: A max (*) Page 17: A dmd max (*) Page 18: hour counter (*) (*) = These variables are stored in EEPROM when the instrument is switched off
Alarms	Programmable, for the VLΣ and An (neutral current). Note: the alarm is only visual, by means of LED on the front of the instrument.
Reset	Independent alarm (VLΣ, An) max: A dmd, W dmd all energies (Wh, varh) and hour counter

Power Supply Specifications

Auxiliary power supply	230VAC -15 +10%, 50-60Hz 115VAC -15 +10%, 50-60Hz 48VAC -15 +10%, 50-60Hz 24VAC -15 +10%, 50-60Hz 18 to 60VDC
Power consumption	AC: 4.5 VA DC: 4W

General Specifications

Operating temperature	0 to +50°C (32 to 122°F) (RH < 90% non condensing)
Storage temperature	-30 to +60°C (-22 to 140°F) (RH < 90% non condensing)
Installation category	Cat. III (IEC 60664, EN60664)
Insulation (for 1 minute)	4000VAC, 500VDC between mesuring inputs and power supply. 500VAC/DC between mesuring inputs and RS485. 4000VAC, 500VDC between power supply and RS485
Dielectric strength	4000 VAC (for 1 min)
EMC	
Emissions	EN50084-1 (class A) residential environment, commerce and light industry

CARLO GAVAZZI

General Specifications (cont.)

EMC (cont.) Immunity	EN61000-6-2 (class A) industrial environment.
Pulse voltage (1.2/50µs)	EN61000-4-5
Safety standards	IEC60664, EN60664
Approvals	CE, (cURus, CSA only “X” and “S” options)
Connections 5(6) A Max cable cross sect. area	Screw-type 2.5 mm^2

Housing Dimensions (WxHxD)	96 x 96 x 63 mm
Material	ABS self-extinguishing: UL 94 V-0
Mounting	Panel
Protection degree	Front: IP65 (standard), NEMA4x, NEMA12 Connections: IP20
Weight	Approx. 400 g (pack. incl.)

Display pages

Display variables in 3-phase systems (in a 3-phase system with neutral)

No	1st variable	2nd variable	3rd variable	Note
1	V L1	V L2	V L3	
2	V L12	V L23	V L31	Decimal point blinking on the right of the display
3	A L1	A L2	A L3	
4	A L1 dmd	A L2 dmd	A L3 dmd	dmd = demand (integration time selectable from 1 to 30 minutes)
5	An	AL.n		AL.n if neutral current alarm is active
6	W L1	W L2	W L3	Decimal point blinking on the right of the display if generated power
7	PF L1	PF L2	PF L3	
8	var L1	var L2	var L3	Decimal point blinking on the right of the display if generated power
9	VA L1	VA L2	VA L3	
10	VA system	W system	var system	
11	VA dmd (system)	W dmd (system)	Hz (system)	dmd = demand (integration time selectable from 1 to 30 minutes)
12		W dmd MAX		Maximum sys power demand
13	Wh (MSD)	Wh	Wh (LSD)	The total indication is given in max 3 groups of 3 digits.
14	varh (MSD)	varh	varh (LSD)	The total indication is given in max 3 groups of 3 digits.
15	V LL system	AL.U	PF system	AL.U= is activated only if one of VLN is not within the set limits.
16	A MAX			max. current among the three phases
17	A dmd max			max. dmd current among the three phases
18	h			hour counter

MSD: most significant digit
LSD: least significant digit

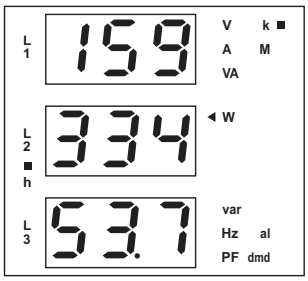

1) Example of kWh visualization:

This example is showing 15 933 453.7 kWh

2) Example of kvarh visualization:

This example is showing 3 553 944.9 kvarh

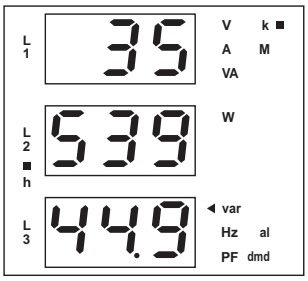

CARLO GAVAZZI

Waveform of the signals that can be measured

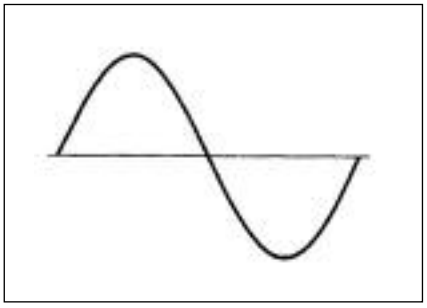

Figure A
Sine wave, undistorted

Fundamental content	100%
Harmonic content	0%
A_{rms} =	1.1107 | $\overline{A}$ |

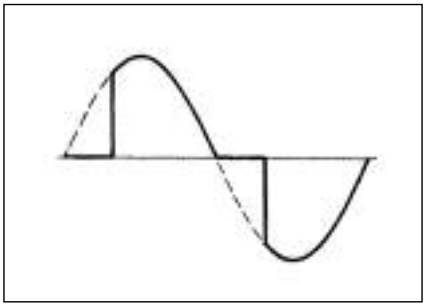

Figure B
Sine wave, indented

Fundamental content	10...100%
Harmonic content	0...90%

Frequency spectrum: 3rd to 16th harmonic
Additional error: <1% FS

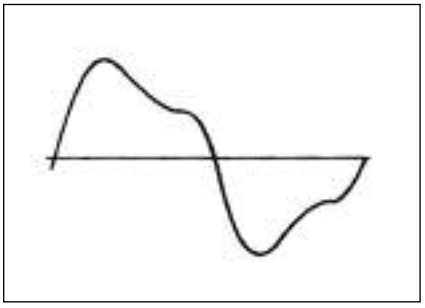

Figure C
Sine wave, distorted

Fundamental content	70...90%
Harmonic content	10...30%

Frequency spectrum: 3rd to 16th harmonic
Additional error: <0.5% FS

Accuracy

kWh, accuracy (RDG) depending on the current

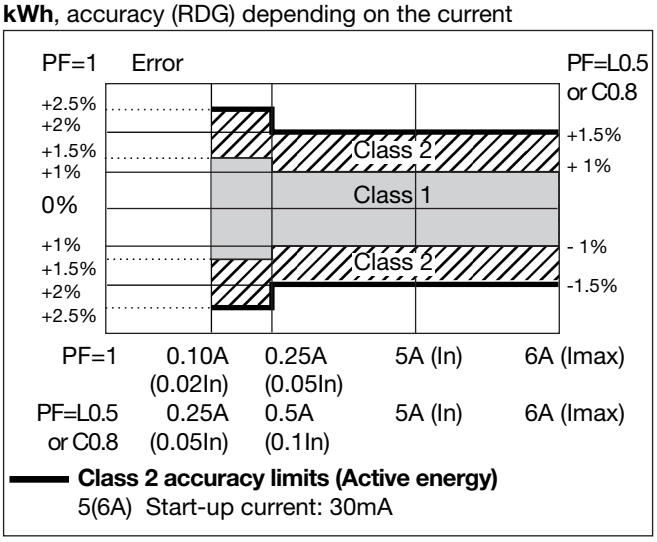

kvarh, accuracy (RDG) depending on the current

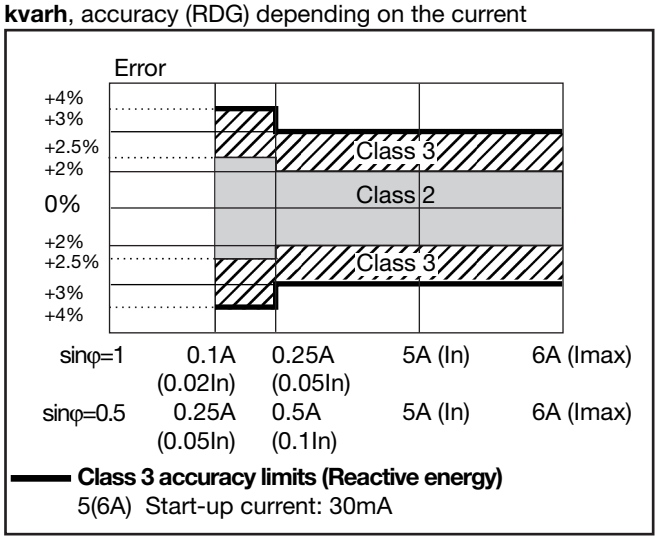

: this graph is only referred to instrument models with the “SG or PG” option.

: this graph is only referred to instrument models with the “X or S” option.

Used calculation formulas

Phase variables

Instantaneous effective voltage

$$V_{1N} = \sqrt{\frac{1}{n} \cdot \sum_{1}^{n} (V_{1N})_i^2}$$

Instantaneous active power

$$W_1 = \frac{1}{n} \cdot \sum_{1}^{n} (V_{1N})_i \cdot (A_1)_i$$

Instantaneous power factor

$$\cos\phi_1 = \frac{W_1}{VA_1}$$

Instantaneous effective current

$$A_1 = \sqrt{\frac{1}{n} \cdot \sum_{1}^{n} (A_1)_i^2}$$

Instantaneous apparent power

$$VA_1 = V_{1N} \cdot A_1$$

Instantaneous reactive power

$$VAr_1 = \sqrt{(VA_1)^2 - (W_1)^2}$$

System variables

Equivalent 3-phase voltage

$$V_{\Sigma} = \frac{V_1 + V_2 + V_3}{3} * \sqrt{3}$$

3-phase reactive power

$$VAr_{\Sigma} = (VAr_1 + VAr_2 + VAr_3)$$

3-phase active power

$$W_{\Sigma} = W_1 + W_2 + W_3$$

3-phase apparent power

$$VA_{\Sigma} = \sqrt{W_{\Sigma}^2 + VAr_{\Sigma}^2}$$

3-phase power factor

$$\cos\phi_{\Sigma} = \frac{W_{\Sigma}}{VA_{\Sigma}}$$

Neutral current

$$An = \overline{A}_{L1} + \overline{A}_{L2} + \overline{A}_{L3}$$

CARLO GAVAZZI

Used calculation formulas (cont.)

$$kWh_i = \int_{t_1}^{t_2} P_i(t)\,dt \cong \Delta t \sum_{n_1}^{n_2} P_{n,i}$$

$$kVarh_i = \int_{t_1}^{t_2} Q_i(t)\,dt \cong \Delta t \sum_{n_1}^{n_2} Q_{n,i}$$

Energy metering

Where:

i = considered phase (L1, L2 or L3)

P = active power

Q = reactive power

t_1, t_2 = starting and ending time points of consumption recording

n = time unit

Δt = time interval between two successive power consumptions

n_1, n_2 = starting and ending discrete time points of consumption recording

Wiring diagrams

Fig. 1

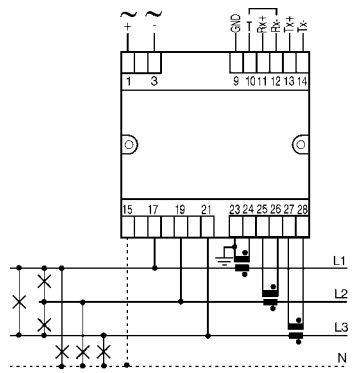

CT connection

Fig. 2

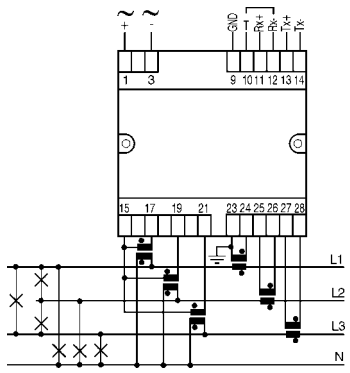

3CT and 3VT connection

Fig. 3

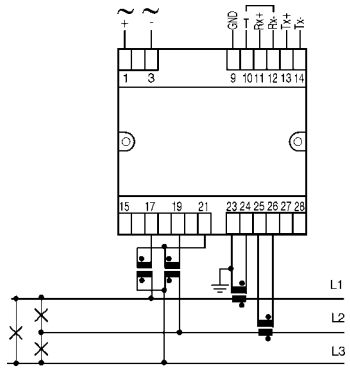

ARON and VT connection

Fig. 4

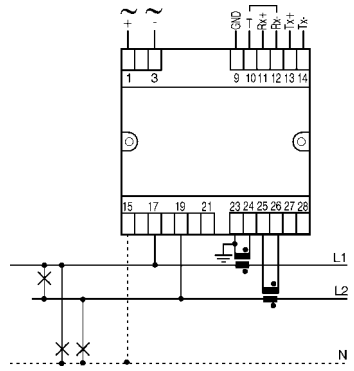

2-phase connection

Fig. 5

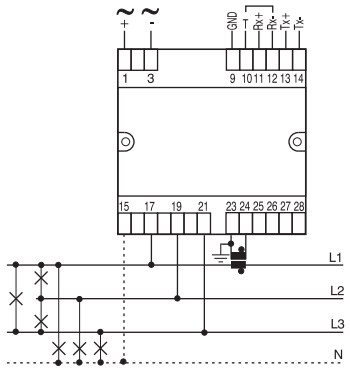

3-phase load balanced connection

Fig. 6

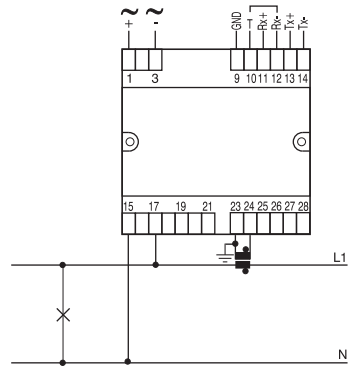

1-phase connection

NOTE: Only for **"PG"** and **"SG"** options: the current measuring inputs are galvanically insulated and therefore they can be connected to ground singly.

NOTE: For all models except for **"PG"** or **"SG"** the current inputs can be connected to the lines ONLY by means of current transformers. The direct connection is not allowed.

ATTENTION: only one ammeter input can be connected to earth, as shown in the electrical diagrams.

RS485 port connections

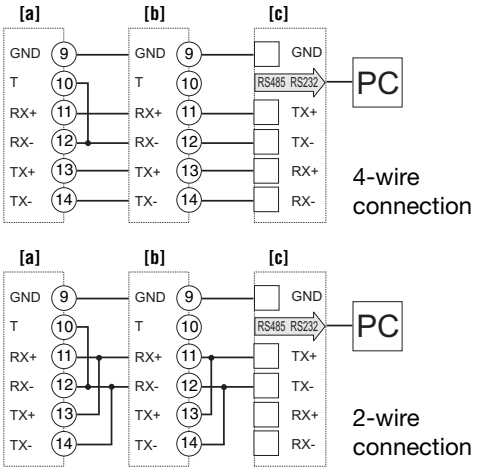

Fig. 7: **a**-Last instrument; **b**-1...n Instrument **c**-RS485/232 serial converter

Dual pulse output connections

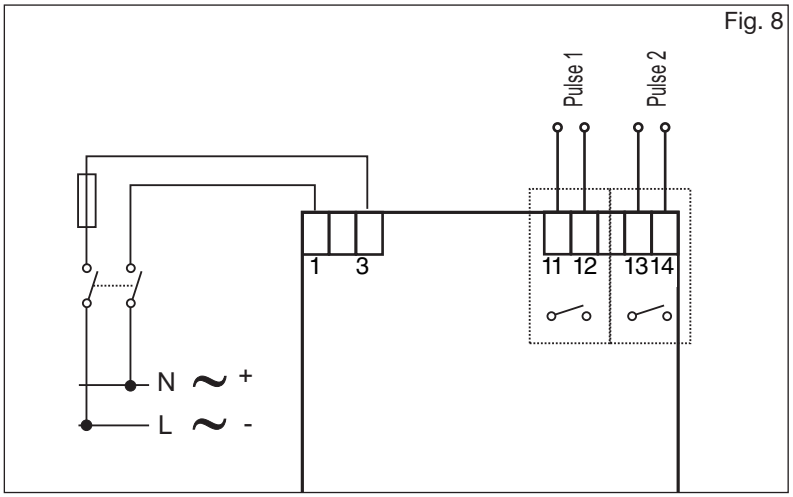

Front Panel Description

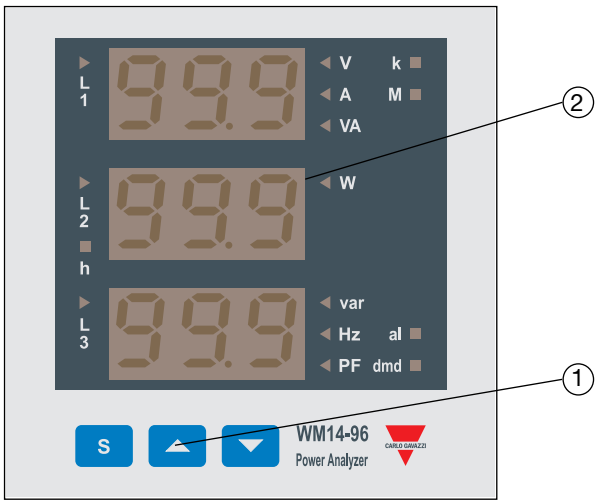

1. **Key-pad**
   To program the configuration parameters and the display of the variables.

   S
   Key to enter programming and confirm selections;

   ▲ ▼
   Keys to:
   - programme values;
   - select functions;
   - display measuring pages.

2. **Display**
   LED-type with alphanumeric indications to:
   - display configuration parameters;
   - display all the measured variables.
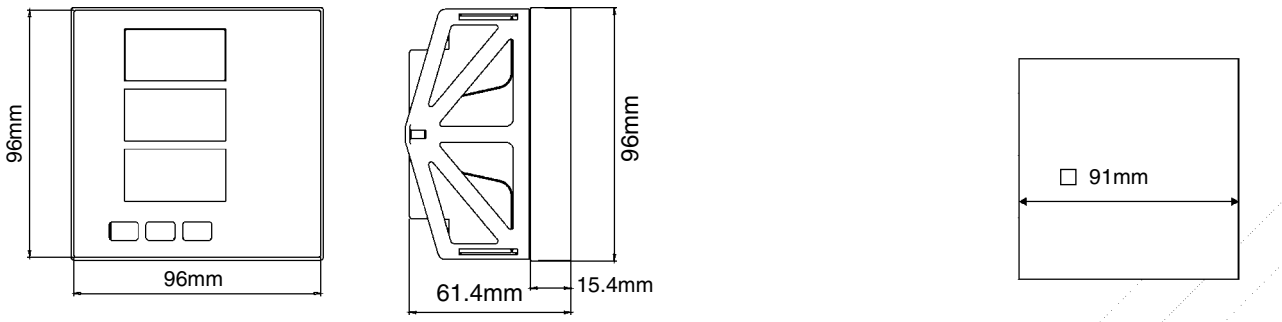
Dimensions and Panel Cut-out