EC diagonal compact fan

ebm-papst Mulfingen GmbH & Co. KG
Bachmühle 2 · D-74673 Mulfingen
Phone +49 7938 81-0
Fax +49 7938 81-110
info1@de.ebmpapst.com
www.ebmpapst.com

Limited partnership · Headquarters Mulfingen
County court Stuttgart · HRA 590344

General partner: Elektrobau Mulfingen GmbH · Headquarters Mulfingen
County court Stuttgart · HRB 590142

Nominal data

Type	**W1G180-AB11-32**
Motor	**M1G074-BF**

Nominal voltage	VDC	48
Nominal voltage range	VDC	32 .. 60

Type of data definition		fa
Speed	min^{-1}	3200
Power input	W	35
Current draw	A	0.82
Min. ambient temperature	°C	- 25
Max. ambient temperature	°C	60

ml = max. load · me = max. efficiency · fa = running at free air · cs = customer specs · cu = customer unit
Subject to alterations

EC diagonal compact fan

Technical features

Mass	1.89 kg
Size	180 mm
Surface of rotor	Coated in black
Material of impeller	Plastic PA66, fibreglass-reinforced
Material of wall ring	Die-cast aluminium, coated in black
Number of blades	5
Direction of air flow	"V"
Direction of rotation	Counter-clockwise, seen on rotor
Type of protection	IP 20
Insulation class	"B"
Humidity class	F0
Max. permissible ambient motor temp. (transp./ storage)	+80 °C
Min. permissible ambient motor temp. (transp./storage)	-40 °C
Mounting position	Any
Condensate discharge holes	None
Operation mode	S1
Motor bearing	Ball bearing
Technical features	- Control input 0-10 VDC / PWM - Tach output - Motor current limit - Soft start
EMC interference immunity	Acc. to EN 61000-6-2 (industrial environment)
EMC interference emission	Acc. to EN 55022 (Class B)
Motor protection	Reverse polarity and locked-rotor protection
Cable exit	Lateral
Product conforming to standard	EN 60950-1
Approval	UL; CSA

ebm-papst Mulfingen GmbH & Co. KG · Bachmühle 2 · D-74673 Mulfingen · Phone +49 7938 81-0 · Fax +49 7938 81-110 · info1@de.ebmpapst.com · www.ebmpapst.com

Product drawing

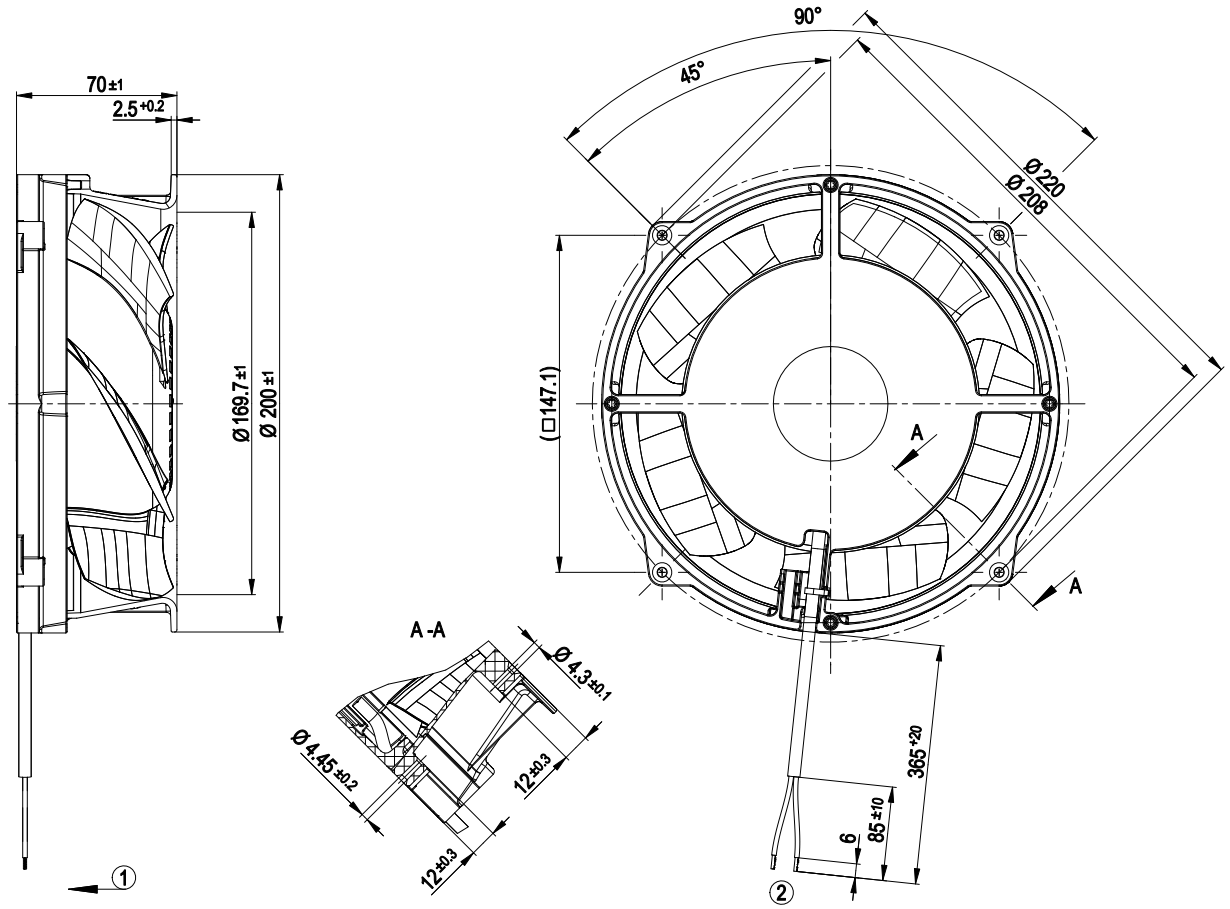

1	Direction of air flow "V"
2	Connection line PVC, AWG 20, 2x brass lead tips crimped

ebm-papst Mulfingen GmbH & Co. KG · Bachmühle 2 · D-74673 Mulfingen · Phone +49 7938 81-0 · Fax +49 7938 81-110 · info1@de.ebmpapst.com · www.ebmpapst.com

Connection screen

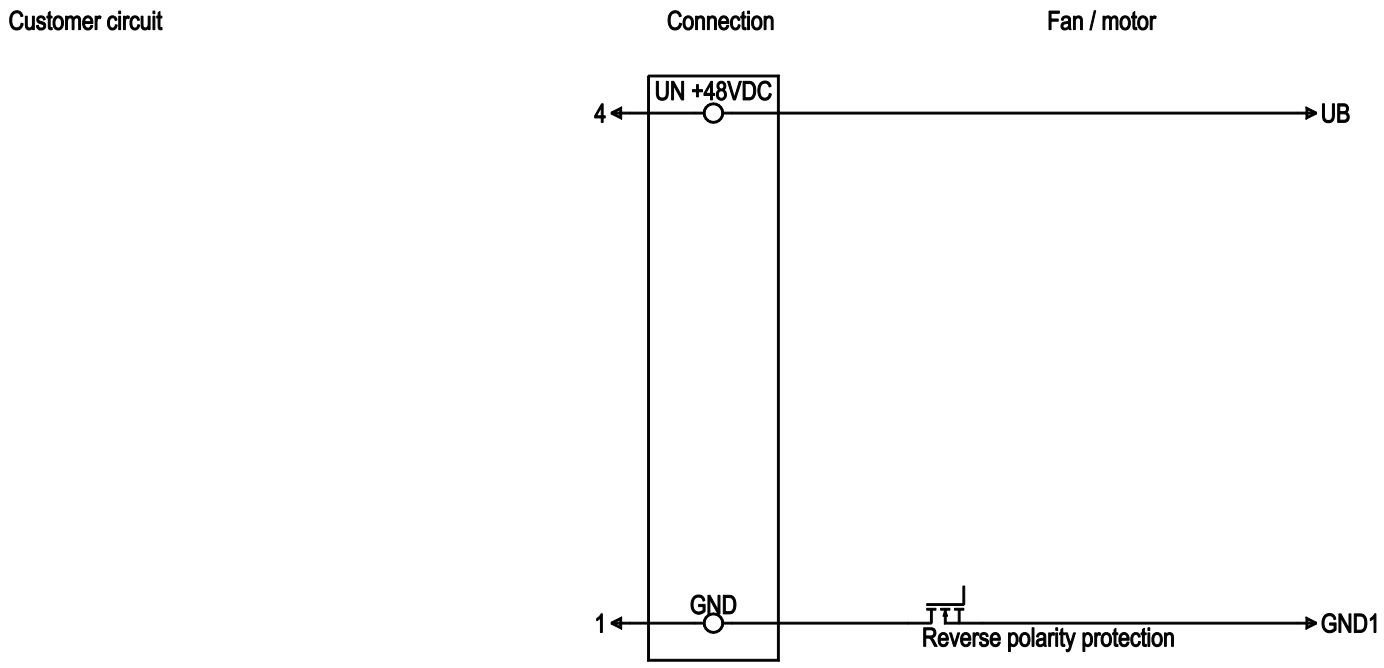

Line	No.	Signal	Colour	Function / assignment
	1	Un +48 VDC	red	Power supply 48 VDC, residual ripple 3.5 %
	4	GND	blue	Reference mass

ebm-papst Mulfingen GmbH & Co. KG · Bachmühle 2 · D-74673 Mulfingen · Phone +49 7938 81-0 · Fax +49 7938 81-110 · info1@de.ebmpapst.com · www.ebmpapst.com

EC diagonal compact fan

Charts: Air flow

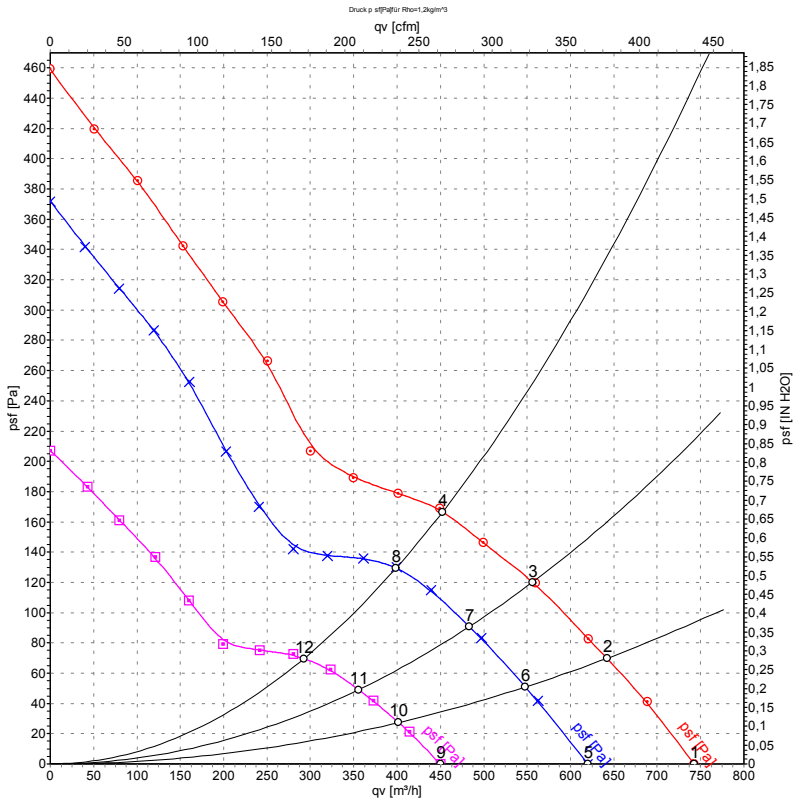

Measurement: LU-108248
Measurement: LU-108246
Measurement: LU-104438

Air performance measured as per ISO 5801 Installation category A. For detailed information on the measuring set-up, please contact ebm-papst. Suction-side noise levels: LwA measured as per ISO 13347 / LpA measured with 1m distance to fan axis. The values given are valid under the measuring conditions mentioned above and may vary according to the actual installation situation. With any deviation from the standard set-up, the specific values have to be checked and reviewed with the unit installed.

Measured values

	U	n	P_e	I	qv	p_{sf}
	V	min^{-1}	W	A	m^3/h	Pa
1	60	3760	56	1.05	740	0
2	60	3600	58	1.13	640	70
3	60	3490	59	1.17	555	121
4	60	3480	59	1.18	450	168
5	48	3200	35	0.82	620	0
6	48	3135	39	0.90	550	50
7	48	3085	41	0.96	485	90
8	48	3075	42	0.97	400	130
9	32	2340	15	0.53	450	0
10	32	2305	16	0.57	400	28
11	32	2280	17	0.60	355	49
12	32	2275	17	0.61	290	70

ebm-papst Mulfingen GmbH & Co. KG · Bachmühle 2 · D-74673 Mulfingen · Phone +49 7938 81-0 · Fax +49 7938 81-110 · info1@de.ebmpapst.com · www.ebmpapst.com