SC-08-44J

Aliases (UALSC0844J0000)

Common Mode Chokes - Power, KEMET, SC-J, Through-Hole, Common Mode, 4,400 uH

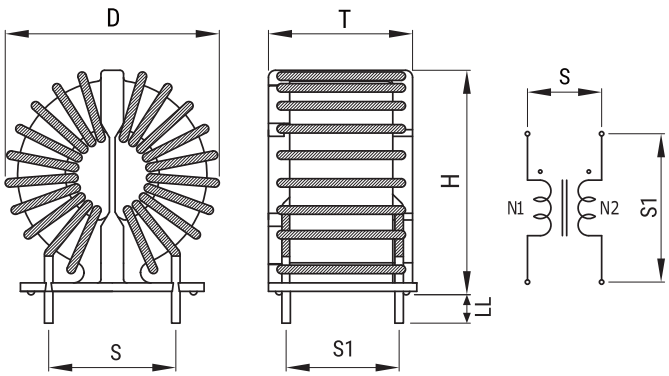

Click here for the 3D model.

General Information	
Series	SC-J
Style	Through-Hole
RoHS	Yes
Notes	Lead Spacing (S/S1) Are For Reference Only.
Miscellaneous	Temperature Rise Maximum: 50 K.
Core	Mn-Zn Ferrite

Dimensions	
D	35mm MAX
T	23mm MAX
H	33mm MAX
LL	5mm +/-2mm
S	18mm NOM
S1	16mm NOM
Wire Size	1.2mm

Specifications	
Voltage AC	250 VAC
Inductance	4.4 mH
Rated Current	8 A
Temperature Range	-40/+120°C
DC Resistance	25 mOhms

Packaging Specifications	
Packaging	Tray
Packaging Quantity	200
Typical Component Weight	46.1 g

Statements of suitability for certain applications are based on our knowledge of typical operating conditions for such applications, but are not intended to constitute - and we specifically disclaim - any warranty concerning suitability for a specific customer application or use. This Information is intended for use only by customers who have the requisite experience and capability to determine the correct products for their application. Any technical advice inferred from this Information or otherwise provided by us with reference to the use of our products is given gratis, and we assume no obligation or liability for the advice given or results obtained.

© 2006 - 2026 YAGEO