TL series

Subminiature washable toggle switches

DISTINCTIVE FEATURES

Process sealed
Single piece case
Front and rear sealing
Wide variety of contact materials
Same PCB layout as TP, TR and TG subminiature switches

ENVIRONMENTAL SPECIFICATIONS

- Operating temperature : -30 °C to +85 °C (-22 °F to +185 °F)
- Moisture : 21 days 95 % (NFC 20-603 - IEC 68-2-3)

ELECTRICAL SPECIFICATIONS

- Max. current/voltage rating with resistive load :
  - gold plated contacts : 0.4 VA 20 V max. AC or DC
  - silver plated contacts : 0.5 A 48 V max. AC or DC
- Minimum load : 10 mA 50 mV - 10 µA 5 VDC
- Contact resistance : 20 mΩ max.
- Insulation resistance : 1,000 MΩ min. at 500 VDC
- Dielectric strength :
  1,000 Vrms 50 Hz min. between terminals and frame
  500 Vrms 50 Hz min. between terminals
- Electrical life at full load :

Contacts	Number of cycles	
	2 positions	3 positions
Gold plated	60,000	30,000
Silver plated	20,000	10,000

GENERAL SPECIFICATIONS

- Strength of terminals : pull-out force - 10 N max.
- Cleaning : solvents or water + detergent
- Wave soldering : 260 °C (500 °F) - 5 sec.

The company reserves the right to change specifications without notice.

TL series

Subminiature washable toggle switches

MATERIALS

- Case : PBT
- Actuator : brass, nickel plated
- Contacts and terminals :
  0 : brass, gold plated
  1 : brass, silver plated
  3 : brass, gold plated (1,27 micron gold)
  8 : contact brass, gold plated + tin plated terminals
  9 : contact brass, gold plated (1,27 micron gold) + tin plated terminals
- Terminal seal : epoxy

APEM products may be recycled at end-of-life for the re-claiming of valuable metal components.

TERMINALS

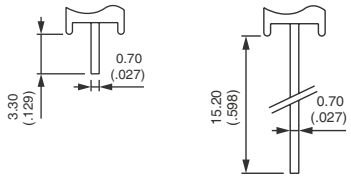

ELECTRICAL FUNCTIONS

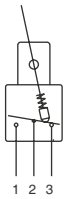

PCB MOUNTING

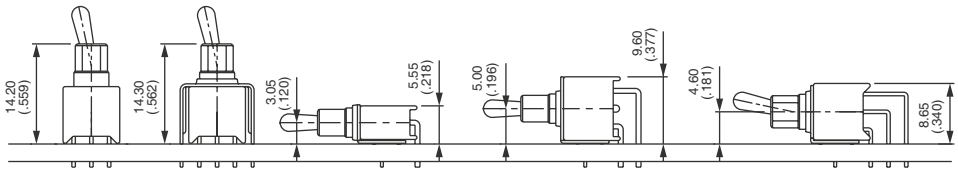

TL series

Subminiature washable toggle switches

BUILD YOUR PART NUMBER

BASIC PART NUMBER

TL

SERIES

NUMBER OF POLES

3	Single pole
4	Double pole

ELECTRICAL FUNCTIONS

6	ON	-	ON
9	ON	OFF	ON
7	MOM	OFF	MOM
8	ON	OFF	MOM
2	ON	-	MOM

TERMINALS

P0	Straight PC
Y0	Bracket mounting
W0	Right angle, horizontal mounting
WW	Right angle, vertical mounting

OPTIONS

CONTACT AND TERMINAL MATERIALS

0	Brass, gold plated
1	Brass, silver plated
3	Brass, gold plated (1.27 micron gold)
8	Contact brass, gold plated + tin plated terminals
9	Contact brass, gold plated (1.27 micron gold) + tin plated terminals (SP only)

LEVER STYLES / CASE COLORS

With blue case		With black case	
00	Short lever, nickel plated	50	Short lever, nickel plated
01	Short lever, black	51	Short lever, black
02	Long lever, nickel plated	52	Long lever, nickel plated
03	Long lever, black	53	Long lever, black
04	Medium lever, nickel plated	54	Medium lever, nickel plated
05	Medium lever, black	55	Medium lever, black
40	Short insulated lever	56	Cylindrical lever, nickel plated
30	Long insulated lever	94	Short insulated lever
		90	Long insulated lever

SPECIAL OPTIONS

00	No special requirement
07	Trimmed terminals - length 3.2 (.125)
08	Extended terminals
18	Switch without ground plate
20	Ground plate with 2 pins
25	Trimmed terminals - length 5 (.196)
50	Crimped ground plate pins

ABOUT THIS SERIES

On the following pages, you will find successively basic part numbers of switches and options in the same order as in above chart.

Notice : please note that not all combinations of above numbers are available. Refer to the following pages for further information.

TL series

Subminiature washable toggle switches

STRAIGHT PC TERMINALS : TL..P0

Single pole	Double pole	III	II	I
TL36P0	TL46P0	ON	-	ON
TL39P0	TL49P0	ON	OFF	ON
TL37P0	TL47P0	MOM	OFF	MOM
TL38P0	TL48P0	ON	OFF	MOM
TL32P0	TL42P0	ON	-	MOM

Shown with standard lever

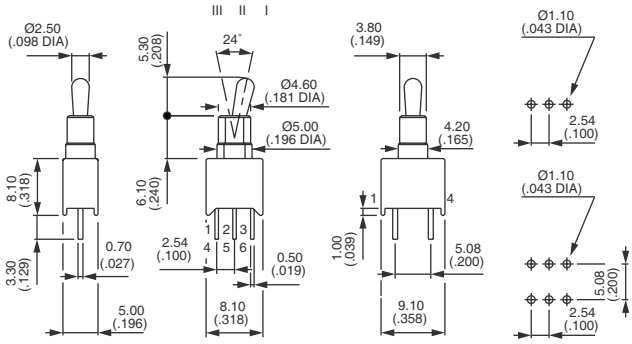

STRAIGHT PC TERMINALS BRACKET MOUNTING : TL..Y0

Single pole	Double pole	III	II	I
TL36Y0	TL46Y0	ON	-	ON
TL39Y0	TL49Y0	ON	OFF	ON
TL37Y0	TL47Y0	MOM	OFF	MOM
TL38Y0	TL48Y0	ON	OFF	MOM
TL32Y0	TL42Y0	ON	-	MOM

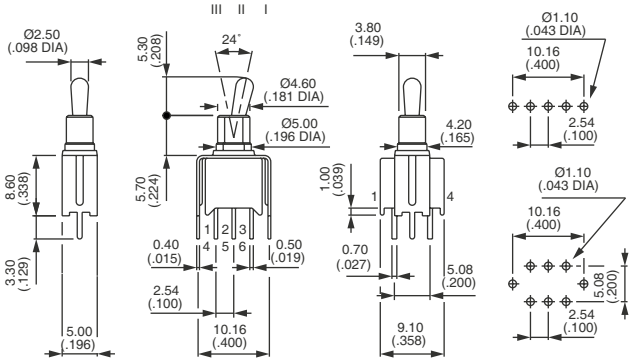

RIGHT ANGLE TERMINALS HORIZONTAL MOUNTING : TL..W0

Single pole	Double pole	III	II	I
TL36W0	TL46W0	ON	-	ON
TL39W0	TL49W0	ON	OFF	ON
TL37W0	TL47W0	MOM	OFF	MOM
TL38W0	TL48W0	ON	OFF	MOM
TL32W0	TL42W0	ON	-	MOM

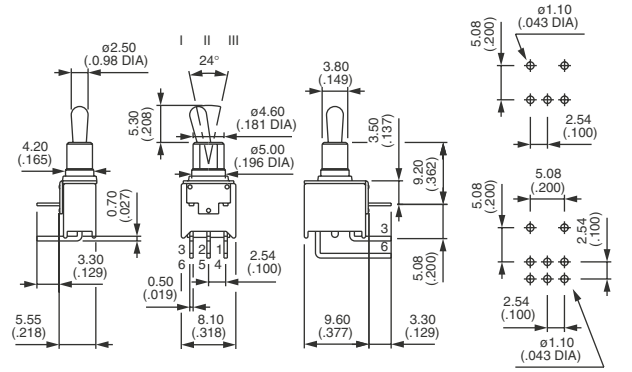

RIGHT ANGLE TERMINALS VERTICAL MOUNTING : TL..WW

Single pole	Double pole	III	II	I
TL36WW	TL46WW	ON	-	ON
TL39WW	TL49WW	ON	OFF	ON
TL37WW	TL47WW	MOM	OFF	MOM
TL38WW*	TL48WW*	ON	OFF	MOM
TL32WW*	TL42WW*	ON	-	MOM

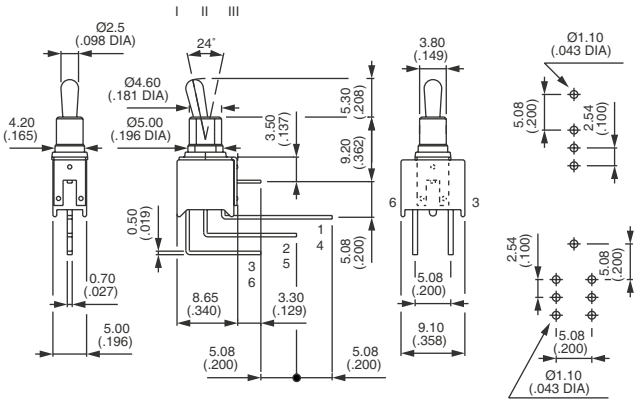

*Functions 2 and 8 : reversed connection available. On request.

TL series

Subminiature washable toggle switches

CONTACT AND TERMINAL MATERIALS

BASIC P/N

0	Brass, gold plated
1	Brass, silver plated
3	Brass, gold plated (1.27 micron gold)
8	Contact brass, gold plated + tin plated terminals
9	Contact brass, gold plated (1.27 micron gold) + tin plated terminals (single pole only)

LEVER AND CASE STYLES

BASIC P/N

SHORT - STANDARD

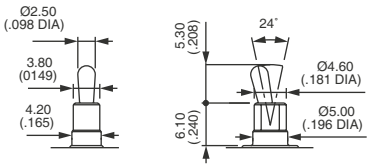

CASE / LEVER	Blue	Black
Nickel plated	00	50
Black	01	51

LONG

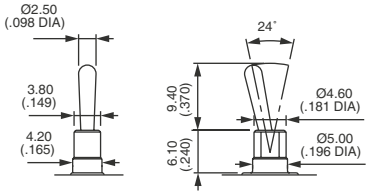

CASE / LEVER	Blue	Black
Nickel plated	02	52
Black	03	53

MEDIUM

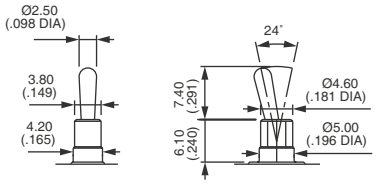

CASE / LEVER	Blue	Black
Nickel plated	04	54
Black	05	55

CYLINDRICAL

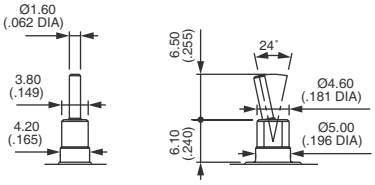

CASE / LEVER	Blue	Black
Nickel plated	-	56

INSULATED LEVERS

Protected against electrostatic discharges (ESD) up to 10 KV.

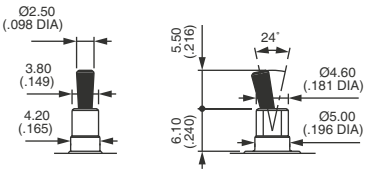

CASE / LEVER	Blue	Black
Black	40	94

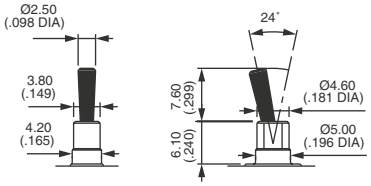

CASE / LEVER	Blue	Black
Black	30	90

TL series

Subminiature washable toggle switches

SPECIAL OPTIONS

BASIC P/N

00	No special requirement
07	**Trimmed terminals -** length 3,2 mm (.125) for TL..WW models only
08	**Extended terminals** for TL..W0 models only
18	Switch **without ground plate** for TL..WW models only
20	**Ground plate with 2 pins** for TL..WW models only
25	**Trimmed terminals** - length 5 mm (.196) for all models, except TL..WW
50	**Crimped ground plate pins**. Retains switch on PCB during handling and wave soldering. For models TL..W0, TL..WW and TL..Y0 single and double pole.

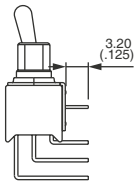

07

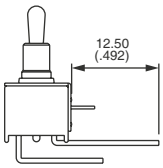

08

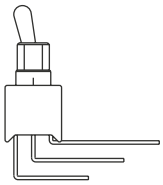

18

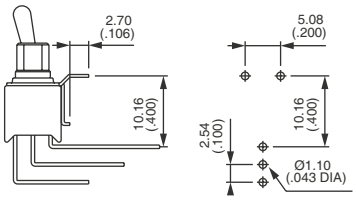

20

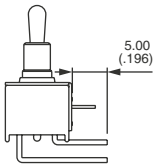

25

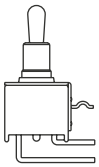

50