TE1500B330RJ ✔ ACTIVE

CGS | CGS TE

TE Internal #: 3-1879455-1

330 ohm, Wire Wound, 5 %, Power Resistor, 1500 W, 2 Terminations, ±440 ppm/°C, Solder Lug, Loose Piece - Box, 119 mm [4.685 in] Height, CGS TE

View on TE.com >

Passive Components > Resistors > Chassis Mount Resistors > Wirewound Resistor: Mineral, 2.5 Kw

Resistor Type: **Power Resistor**

Resistance Class: **Up to 1kΩ**

Resistance Value: **330 Ω**

Power Rating: **1500 W**

Element Type: **Wire Wound**

All Wirewound Resistor: Mineral, 2.5 Kw (607)

Features

Product Type Features

Resistor Type	Power Resistor
Element Type	Wire Wound

Configuration Features

Number of Resistors	1

Electrical Characteristics

Operating Voltage	2500 V
Resistance Class	Up to 1kΩ
Resistance Value	330 Ω
Power Rating	1500 W
Passive Component Tolerance	5 %

Termination Features

Number of Terminations	2
Chassis Mount Resistor Termination Type	Solder Lug

Mechanical Attachment

Panel Mount Feature Type	Mounting Brackets

Dimensions

Product Height	119 mm[4.685 in]
Product Length	465 mm[18.307 in]
Product Width	60 mm[2.362 in]

Usage Conditions

Operating Temperature Range	-55 – 155 °C[-67 – 311 °F]
Temperature Coefficient	±440 ppm/°C

Packaging Features

Packaging Method	Loose Piece - Box

Product Compliance

For compliance documentation, visit the product page on TE.com>

EU RoHS Directive 2011/65/EU	Compliant
EU ELV Directive 2000/53/EC	Compliant
China RoHS 2 Directive MIIT Order No 32, 2016	有害物质含量符合标准要求 No Restricted Substance(s) Above Threshold
EU REACH Regulation (EC) No. 1907/2006	Current ECHA Candidate List: JUNE 2025 (250) Candidate List Declared Against: JUNE 2025 (250) Does not contain REACH SVHC
Halogen Content	Low Halogen - Br, Cl, F < 900 ppm per homogenous material. Also BFR/CFR/PVC Free
Solder Process Capability	Not applicable for solder process capability

Product Compliance Disclaimer

This information is provided based on reasonable inquiry of our suppliers and represents our current actual knowledge based on the information they provided. This information is subject to change. The part numbers that TE has identified as EU RoHS compliant have a maximum concentration of 0.1% by weight in homogenous materials for lead, hexavalent chromium, mercury, PBB, PBDE, DBP, BBP, DEHP, DIBP, and 0.01% for cadmium, or qualify for an exemption to these limits as defined in the Annexes of Directive 2011/65/EU (RoHS2). Finished electrical and electronic equipment products will be CE marked as required by Directive 2011/65/EU. Components may not be CE marked. Additionally, the part numbers that TE has identified as EU ELV compliant have a maximum concentration of 0.1% by weight in homogenous materials for lead, hexavalent chromium, and mercury, and 0.01% for cadmium, or qualify for an exemption to these limits as defined in the Annexes of Directive 2000/53/EC (ELV). Regarding the REACH Regulation, the information TE provides on SVHC in articles for this part number is based on the latest European Chemicals Agency (ECHA) 'Guidance on requirements for substances in articles' posted at this URL: https://echa.europa.eu/guidance-documents/guidance-on-reach

Compatible Parts

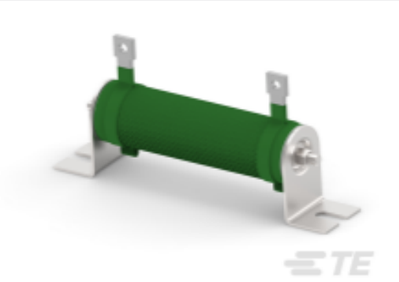

TE Part # CAT-C339-T2201
Wirewound Resistor: Mineral, 2.5 Kw

Also in the Series | CGS TE

Chassis Mount Resistors(667)

RJ14 Connectors(4)

RJ22 Connectors(2)

RJ25 Connectors(4)

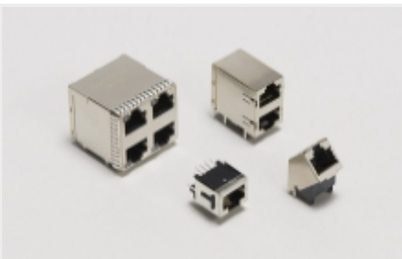

RJ45 Connectors(23)

Customers Also Bought

TE Part #DT04-2P
REC, 2P, GRY, N

TE Part #DT06-2S
PLG, 2P, GRY, N

TE Part #CAT-D48-ST273
DEUTSCH Connector Solid Contacts

TE Part #CAT-D487-W416
Wedgelocks: DEUTSCH DT

TE Part #114017-ZZ
SEALING PLUG, SIZE 12/16, WHT

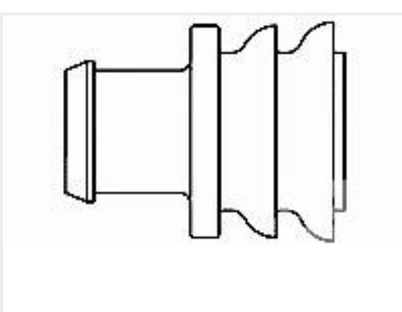

TE Part #281934-2
SINGLE WIRE SEAL

TE Part #CAT-AM71-CH8172
AMP SUPERSEAL 1.5MM, CONNECTOR HOUSING

Documents

Product Drawings

TE 1500W 330R 5% Bracket

English

CAD Files

3D PDF

3D

Customer View Model

ENG_CVM_CVM_3-1879455-1_A.2d_dxf.zip

English

Customer View Model

ENG_CVM_CVM_3-1879455-1_A.3d_igs.zip

English

Customer View Model

ENG_CVM_CVM_3-1879455-1_A.3d_stp.zip

English

By downloading the CAD file I accept and agree to the Terms and Conditions of use.

Datasheets & Catalog Pages

4-1773460-6_RESISTIVE_SOLUTIONS_RAIL

English

1309350_PASSIVE_COMPONENT

English

High Power Wire wound Resistor Type TE Series

English

8-1773459-4_POWER_FILTERING_AND_RESISTIVE_SOLUTIONS_FOR_ELEVATORS_AND_ESCALATORS

English