WM50

Multichannel power analyzer for single, two and three-phase systems

Description

WM50 is a multichannel power analyzer for single, two and three-phase systems.
Using TCD12 split core current sensors, it can monitor up to 96 single phase loads or any combination of single and three-phase loads or two and single-phase loads for a maximum of 96 channels.
The system can be set up, measurements viewed and up to 16 alarms managed from WM50 and UCS.
Main unit functions can be expanded with a maximum of two of the following available modules: digital input/output module, analog input module and communication module.

Benefits

- **Low measurement cost per channel**. You can monitor up to 96 current channels with a single analyzer thanks to the specific 12-channel current sensors.
- **Reduced installation time and errors.** It is equipped with detachable terminals for all connections. It connects to 12-channel current sensors with proprietary cables. The clips supplied with the sensors ensure that cables are always in order during installation.
- **Scalability**. WM50 can be integrated with accessory modules to expand its control and communication capacity.
- **Disturbance immunity.** Digital communications between current sensors and WM50 ensure excellent disturbance immunity.
- **Granular analysis.** It provides total and single load measurements (up to 96 current channels).
- **Clarity.** The wide backlit LCD display clearly shows the measurements and the configuration parameter values.
- **Quick configuration.** The proprietary UCS configuration software (desktop or mobile version) is free and permits quick system configuration and diagnostics. An optical port is available for quick analyzer configuration using OptoProg (CARLO GAVAZZI).

Applications

WM50 with TCD12 current sensors is connected directly on output from the circuit breaker present in switchboards for simultaneous monitoring of multiple single or three-phase loads in low voltage systems.
In a data center, WM50 can monitor up to 96 channels and thus ensures that an entire Power Distribution Unit (PDU) is monitored.
In other contexts, with critical loads such as hospitals, food storage or industrial production systems, WM50 guarantees high reliability and extreme measurement precision.

Architecture

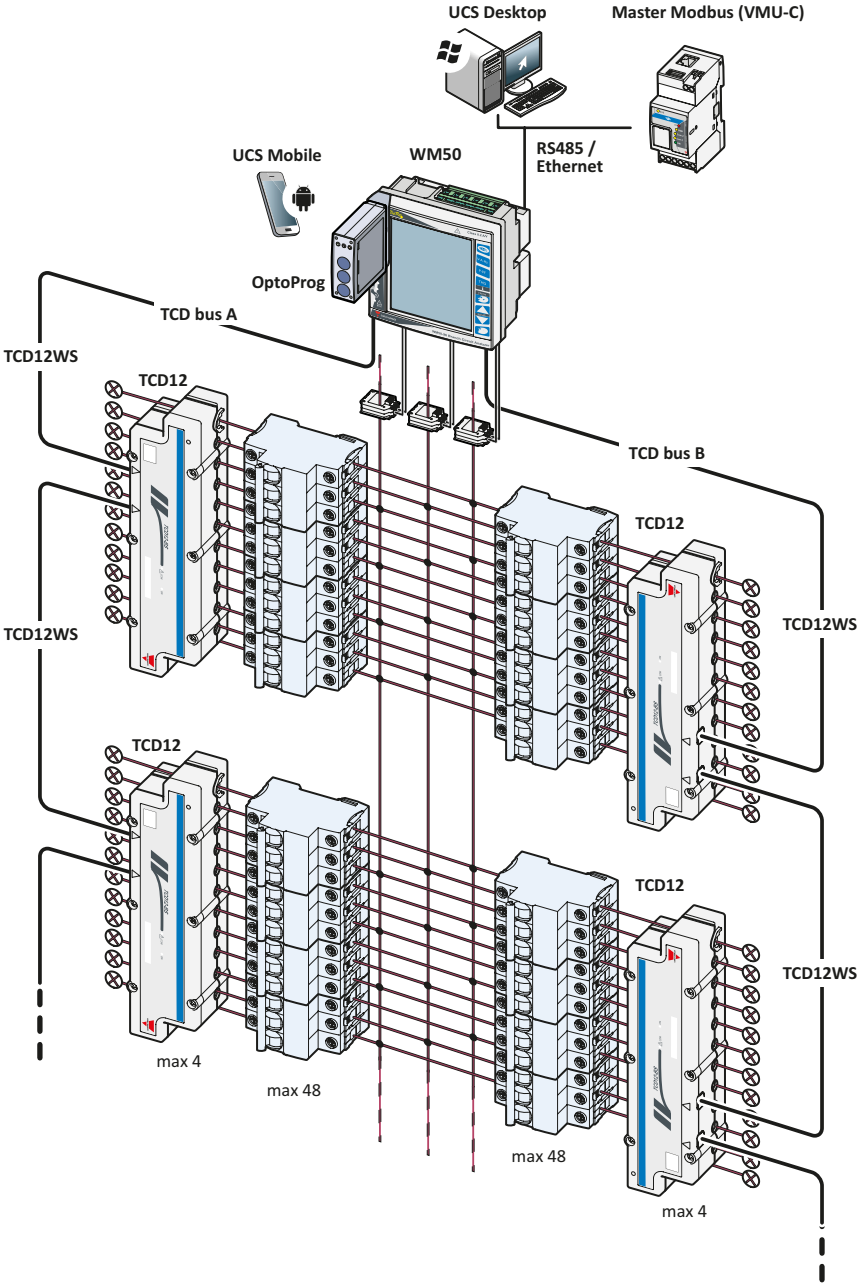

Main functions

- Monitor up to 96 single phase loads or a combination of three-phase and single-phase loads or two-phase and single-phase loads for a maximum or 96 channels
- Measure main electrical variables and voltage and current harmonic distortions in a three, two or single-phase system
- View total and partial active and reactive energy consumption (exported and imported)
- View up to three water, gas and heat totalizers
- Manage up to 16 alarms
- View up to six different energy consumption tariffs
- Manage six digital inputs and up to six digital outputs (via optional accessory module)

- Manage three analog inputs (via optional accessory module)
- Transmit data to other systems (via optional accessory module)
- Log measurements and events

Components

Module	Description
WM50	Main unit, measures and displays the main line electrical variables via current sensors. With LCD display and touch keypad, it lets you set measurements parameters, configure accessory modules and manage up to 16 alarms. It communicates with TCD12 current sensors via pre-installed MABC module to monitor up to 96 channels.
Accessory modules (optional)	Connected to the main unit via local bus, the following expand WM50 functions.

Compatible accessory modules

Type	Module description	Part number
Digital inputs/outputs	Six digital inputs and six static outputs	M F I6 O6
	Six digital inputs and four relay outputs	M F I6 R4
Analog inputs	Three analog inputs (neutral current, temperature probe, 20 mA input)	M A T P N
Communication	Modbus RTU communication on RS485/RS232	M C 485232
	Modbus TCP/IP communication on Ethernet	M C ETH

Possible configurations

WM50 with MABC	WM50 with MABC + 1 module	WM50 with MABC + 2 modules
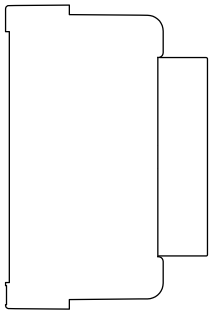	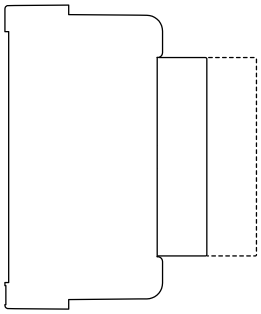	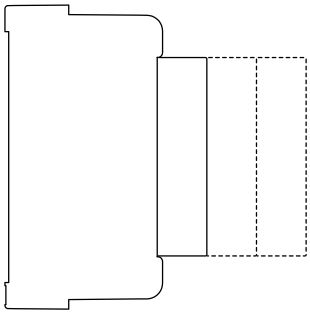

WARNING: maximum 1 module per type. A digital input/output module cannot be connected with an analog input module.

Features

General

Material	Front: ABS, self-extinguishing V-0 (UL 94); PC, self-extinguishing V-2 (UL94) Back and accessory modules: PA66, self-extinguishing V-0 (UL 94)
Protection degree	Front: IP65 NEMA 4x NEMA 12 Terminals: IP20
Terminals	Type: detachable Maximum section: 2.5 mm^2 Torque: 0.5 Nm
Overvoltage category	Cat. III
Pollution degree	2
Noise rejection (CMRR)	100 dB, from 42 to 62 Hz
MTBF/MTTF	Minimum 80 years
Insulation	double electrical insulation on areas accessible to the user. For insulation between inputs and outputs, see "Input and output insulation"

Input and output insulation

Type	Power supply	Voltage meas-urement inputs	Current meas-urement inputs	Digital outputs/ inputs	Analog inputs	RS485 serial port	Ethernet port	TCD12 bus port	Func-tional ground connec-tor
Power supply	-	Double **	Rein-forced	Double **	Double **	Double **	Double **	Base	Base
Voltage meas-urement inputs	Double **	-	Rein-forced	Double **	Double **	Double **	Double **	Base	Base
Current meas-urement inputs	Rein-forced	Rein-forced	-	Rein-forced	Rein-forced	Rein-forced	Rein-forced	Rein-forced	Rein-forced
Digital outputs/ inputs	Double **	Double **	Rein-forced	-	NP	Double **	Double **	Base	Base
Analog inputs	Double **	Double **	Rein-forced	NP	-	Double **	Double **	Base	Base
RS485 serial port	Double **	Double **	Rein-forced	Double **	Double **	-	NP	Base	Base
Ethernet port	Double **	Double **	Rein-forced	Double **	Double **	NP	-	Base	Base
TCD12 bus port	Base	Base	Rein-forced	Base	Base	Base	Base	-	Base
Function-al ground connec-tor	Base	Base	Rein-forced	Base	Base	Base	Base	Base	-

NP: combination not possible
Note **: 2.5 kV ac 1 min (4 kV pk 1.2/50 µS) and limiter impedance.

Environmental

Operating temperature	From -25 to +40 °C/from -13 to +104 °F
Storage temperature	From -30 to +70 °C/from -22 to +158 °F

NOTE: R.H. < 90 % non-condensing @ 40 °C / 104 °F.

Compatibility and conformity

Directives	2014/35/EU (Low Voltage) 2014/30/EU (Electro Magnetic Compatibility) 2011/65/EU (Electric-electronic equipment hazardous substances)
Standards	Electromagnetic compatibility (EMC) - emissions and immunity: EN61000-6-2, EN61000-6-3 (V ac power supply)EN61000-6-4 (V dc power supply) Electrical safety: EN61010-1 Metrology: EN62053-22EN62053-23 Pulse outputs: IEC62053-31, DIN43864
Approvals	

Main unit

Description

Main unit with LCD display and touch keypad to view measurements, configure the system and manage up to 16 alarms.
Supplied with pre-assembled MABC for communications with TCD12 current sensors.
It can be integrated with maximum two additional modules: one digital input/output or analog input module and one communication module.
It can be quickly configured with OptoProg or UCS.

Main features

- Channel/load measurement: A, THD current, W/var/VA, PF, kWh
- Main line measurements: V L-L, V L-N, A, W/var/VA, PF, Hz, THD V, THD A, TDD A, single harmonics
- Imported and exported active and reactive main line energy meters
- Calculate the minimum, maximum, average and maximum average values for all main line measurements
- Channel/load energy precision: class 2
- Main line energy precision: class 0.5S
- Manage three totalizers
- 16 virtual alarms
- Event and data log in internal database (without the need for additional modules or external datalogger)
- Internal clock
- Optical port
- Backlit LCD display and touch keypad
- Detachable terminals
- Sealable terminal caps
- Configuration via UCS or WM50 keypad

Main functions

- Manage up to eight TCD12 current sensors for a maximum of 96 channels
- Measure main electrical variables and main line voltage and current harmonic distortions
- Measure main line energy consumption
- Measure total load operating hours
- Manage up to 16 alarms
- Display main electrical variables on single channels and connected loads (via communications)
- Display single channel energy consumption and loads (via communications)

Structure

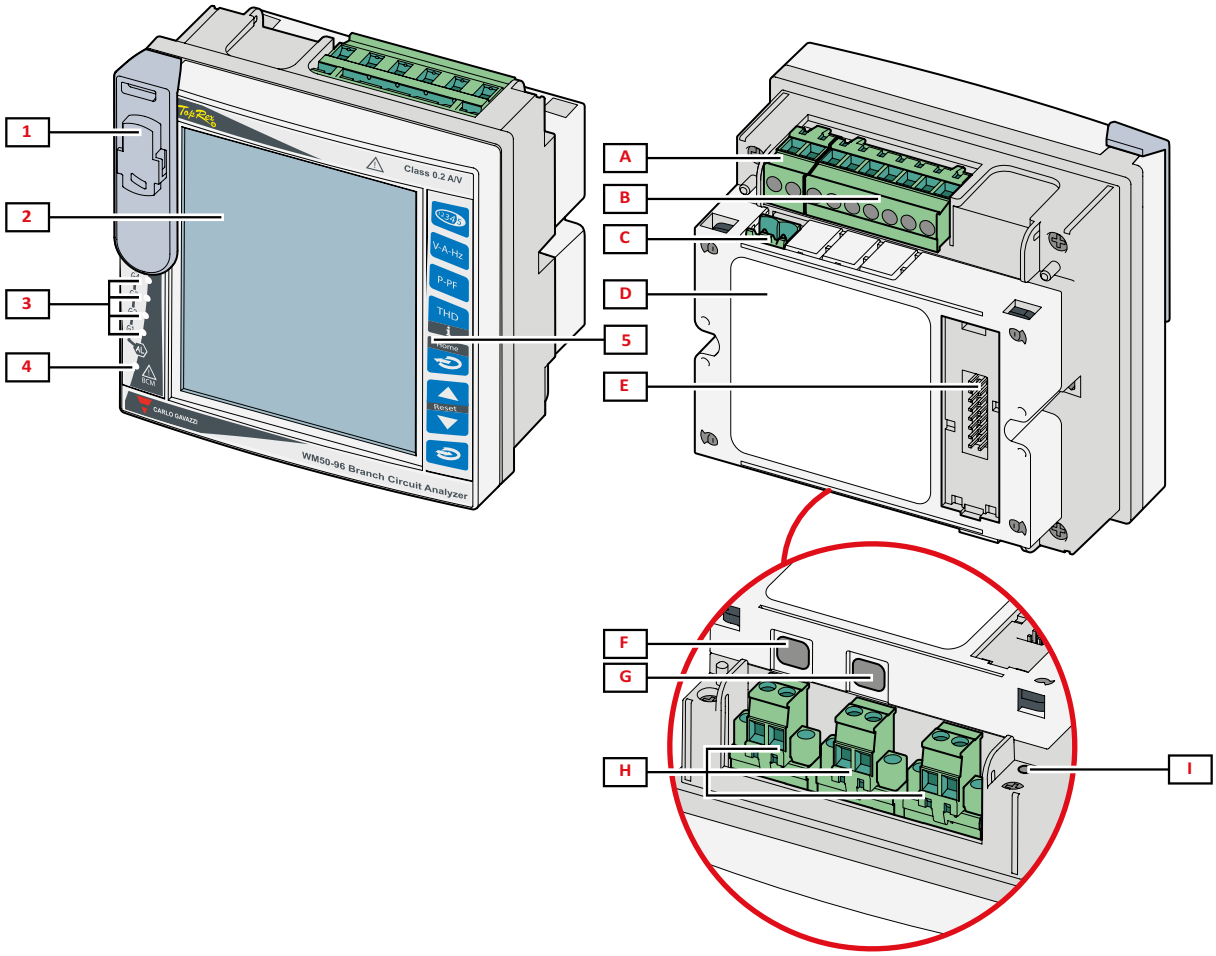

Area	Description
1	Optical port and plastic support for OptoProg (CARLO GAVAZZI) connection
2	Backlit LCD display
3	Alarm LEDs
4	MABC module status LED
5	Touch keypad
A	Detachable power supply terminal block
B	Detachable voltage input terminal block
C	Detachable functional grounding terminal block
D	MABC module (irremovable) for communications with TCD12 current sensors
E	Local bus port for accessory modules
F	B port for TCD12 bus
G	A port for TCD12 bus
H	Detachable current input terminal block
I	Power supply status LED

Features

General

Mounting	Panel mounting
Weight	540 g (packaging included)

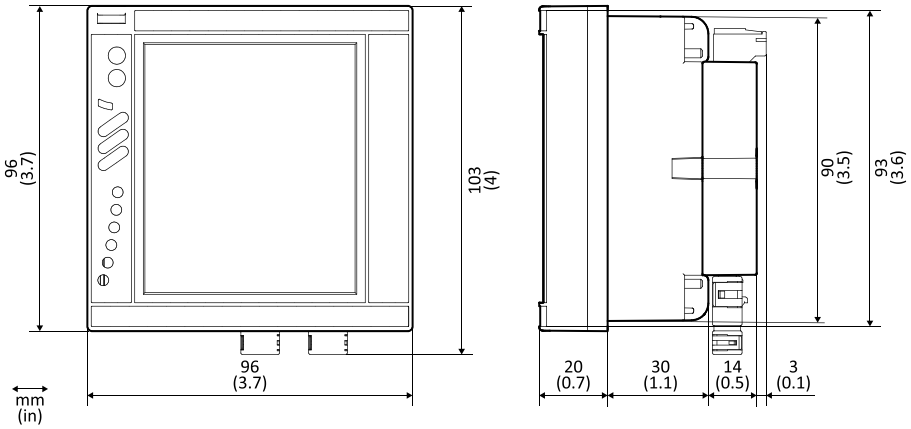

Electrical specifications

Electrical system	
Managed electrical system	Single-phase (2-wire). Two-phase (3-wire). Three-phase (4-wire)
Voltage inputs	
Voltage connection	Direct
VT/PT transformation ratio	-
Rated voltage L-N (from Un min to Un max)	From 120 to 277 V
Rated voltage L-L (from Un min to Un max)	From 208 to 480 V
Voltage tolerance	-20%, + 15%
Overload	Continuous: 1.2 Un max For 500 ms: 2 Un max
Input impedance	>1.6 MΩ
Frequency	50/60 Hz
Current inputs	
Current connection	Via CT
CT transformation ratio	From 1 to 2000
Rated current (In)	5 A
Minimum current (Imin)	0.05 A
Maximum current (Imax)	6 A
Start-up current (Ist)	5 mA
Overload	Continuous: Imax For 500 ms: 20 Imax
Input impedance	< 0.2 VA

Power Supply

Auxiliary power supply	From 100 to 277 V ac/dc ± 10%
Consumption	≤20 VA (ac), 9 W (dc)

Measurements

Method	TRMS measurements of distorted waveforms
Sampling	3200 samples/s @50 Hz 3840 samples/s @60 Hz

Available measurements

WM50 calculates and displays both main line and single channel and load measurements.
All measurements are displayed by UCS or via Modbus communications (Carlo Gavazzi VMU-C monitoring system or other data acquisition system). Main line measurements are also available on screen.

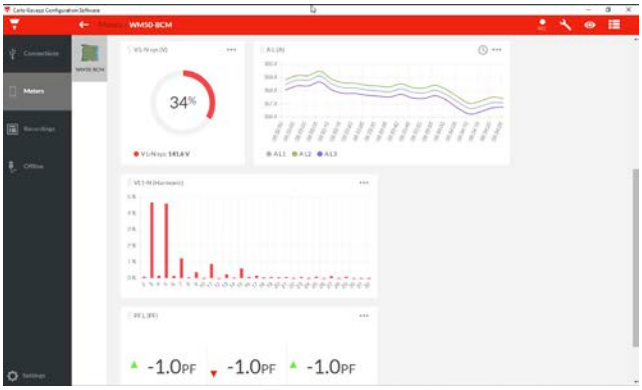

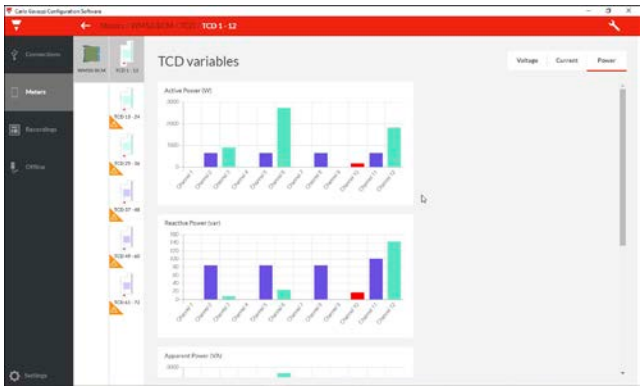

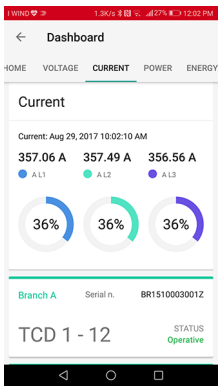

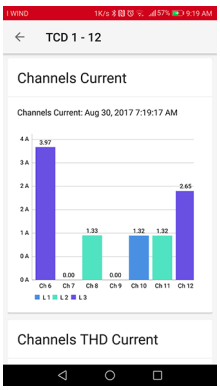

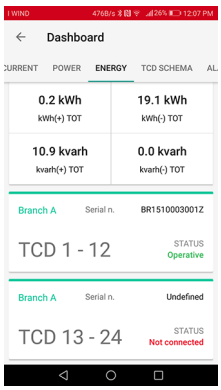

Main line measurements

Note: the following values are available for all measurements: minimum, maximum, average (dmd) and maximum average (max dmd). The available variables depend on the type of system set.

Active energy/|Reactive energy	Total, partial and by tariff
	Imported
	Exported
Totalizers	Up to three totalizers
	Gas
	Cold water
	Hot water
	Heat
	Protection trips
Current	Neutral Phase System
Voltage	Phase-phase
	Phase-neutral
	System
	Phase-phase asymmetry
	Phase-neutral asymmetry
Total harmonic distortion (THD)	Up to 32nd harmonic. Total, even and odd
	Phase current
	Phase-phase voltage
	Phase-neutral voltage
	NOTE: also single harmonics from UCS.
Total demand distortion (TDD)	Phase current
Power	Reactive, active, apparent. Phase System
Power factor	Phase System
Frequency	System
Voltage asymmetry	Phase-phase Phase-neutral

Channel and load measurements (TCD12)

Note: the single channel and load variable can be selected via UCS to manage alarms with differentiated thresholds for each channel/load and view daily minimum and maximum values and real-time minimum, maximum and average values (dmd).

Single channel	Current
	Current THD (up to 15th harmonics)
	Active/reactive/apparent power
	Power factor
	Active energy
Load	Voltage
	Each phase current
	Each phase current THD (up to 15th harmonics)
	Active/reactive/apparent power
	Power factor
	Active energy

Measurement accuracy

Current	
From 0.05 In to Imax	±(0.2% rdg + 2dgt)
From 0.01 In to 0.05 In	±(0.5% rdg + 2dgt)

Phase-phase voltage	
From Un min -20% to Un max + 15%	±(0.5% rdg +1dgt)

Phase-neutral voltage	
From Un min -20% to Un max + 15%	±(0.2% rdg +1dgt)

Active and apparent power	
From 0.05 In to Imax (PF=0.5L, 1, 0.8C)	±(0.5% rdg +1dgt)
From 0.01 In to 0.05 In (PF=1)	±(1% rdg +1dgt)

Reactive power	
From 0.1 In to Imax (sinϕ=0.5L, 0.5C) **From 0.05 In to Imax (sinϕ=1)**	±(1% rdg + 1 dgt)
From 0.05 In to 0.1 In (sinϕ=0.5L, 0.5C) **From 0.02 In to 0.05 In (PF=1)**	±(1.5% rdg + 1 dgt)
Power factor	±[0.001+0.5%(1 – PF rdg)]
Active energy	Class 0.5S (EN62053-22)
Reactive energy	Class 2 (EN62053-23)
THD	±1%

Frequency	
From 45 to 65 Hz	±0.1 Hz

Channel and load measurement accuracy (TCD12)

Current	
From 0.1 Ib to Imax	±(0.5% rdg + 2dgt)
From 0.05 Ib to 0.1 Ib	±(1% rdg + 2dgt)

Active and apparent power	
From 0.1 Ib to Imax (PF=1) **From 0.2 Ib to Imax (PF=0.5L, 0.8C)**	±(2% rdg +1dgt)
From 0.05 In to 0.1 Ib (PF=1) **From 0.1 Ib to 0.2 Ib (PF=0.5L, 0.8.5C)**	±(2.5% rdg +1dgt)

Reactive power	
From 0.1 Ib to Imax (sinϕ=1)	±(3% rdg + 2 dgt)
From 0.2 Ib to Imax (sinϕ=0.5L, 0.5C)	±(3% rdg + 1 dgt)
Power factor	±[0.001+0.5%(1 – PF rdg)]
Active energy	Class 2 (EN62053-21)
THD	±1%

Display

Type	Backlit LCD
Refresh time	250 ms
Description	5 rows: 1st: 10 digits (7.5 mm) 2nd, 3rd, 4th, 5th: 4 digits (14 mm)
Variable readout	Instantaneous: 4 digits, min: 0.001, max: 9 999 M Energy meters and totalizers: 10 digits, min: 0.01, max: 9 999 999 999

LED

G1, G2, G3, G4	Alarm status and TCD12 configuration diagnostics
BCM	TCD12 monitoring status
Back	Power supply status

Main line electrical variable database

Content	Minimum, maximum and average values of main line variables selected by the user
Data recorded for each record	Record ID Time stamp * Type (min, max, average) Variable Value
Features	Log interval: from 1 to 60 min Maximum number of records saved: from 10,000 to 260,000 according to the number of monitored variables Memory management: FIFO

Daily channel and load maximum/minimum database

Content	Daily minimum and maximum values of TCD12 variable set in advanced monitoring
Data recorded for each record	Record ID Time stamp * Value
Features	Log interval: daily Maximum number of records saved: 366 Memory management: FIFO

Main unit event database

Content	Main unit events and alarms
Data recorded for each record	Record ID Time stamp * Type (on, off, configuration change, programming login, new minimum, maximum, maximum among average values reached, value reset, meter/totalizer reset, database reset, digital input/output status change) Variable associated with the event
Features	Number of events: 10 000 Memory management: FIFO

TCD12 event database

Content	TCD12 events and alarms
Data recorded for each record	Record ID Time stamp * Type (single channel alarm, load alarm, TCD12 configuration change or load configuration change) Other information according to event type: single channel alarm: channel alarm load alarm: load alarm TCD12 configuration change: set channel, phase pattern and associated phase, selected advanced monitoring variable, energy meter reset and/or minimum and maximum values load configuration change: set load, selected advanced monitoring variable
Features	Number of events: 10 000 Memory management: FIFO

Optical port

Compatible accessories	OptoProg
Configuration parameters	Baud rate (9.6 / 19.2 / 38.4 / 115.2 kbps) Parity (None/ Odd/ Even)
Configuration mode	Via keypad or UCS software

Special functions

- 16 virtual alarms (up, down, in window or out of window)
- Filter to stabilize variable measurements with high fluctuations
- Integration interval start synchronization to calculate the average value via internal clock or via digital input
- Home page customization on the single row level
- Total load operating hour meter
- Main unit and TCD12 event log in internal database
- Main line and single channel data log in internal database
- Minimum, maximum, average and maximum average value reset
- Energy and rate meter reset
- Totalizer reset
- Optical port for configuration via OptoProg
- Password protected settings menu

Connection Diagrams

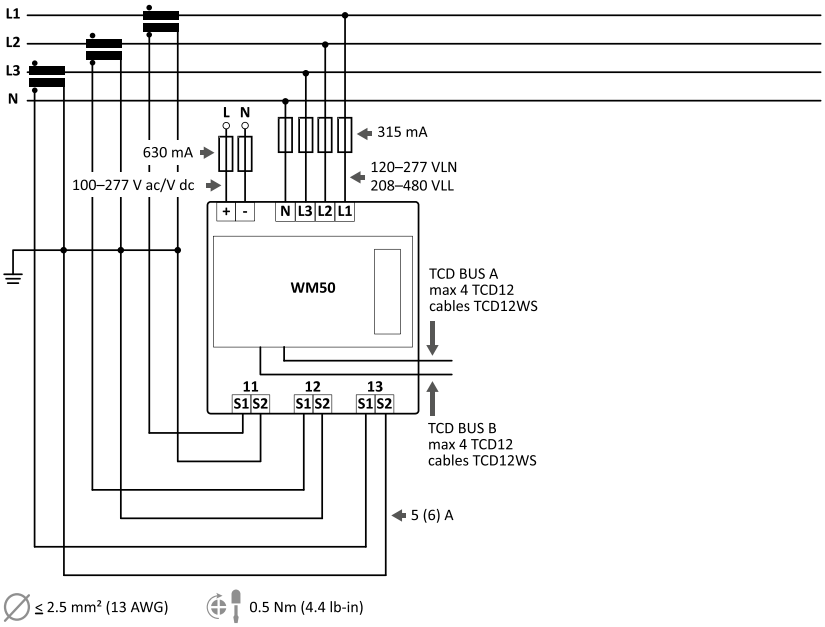

Fig. 1 *Three-phase system with neutral (4-wire).*

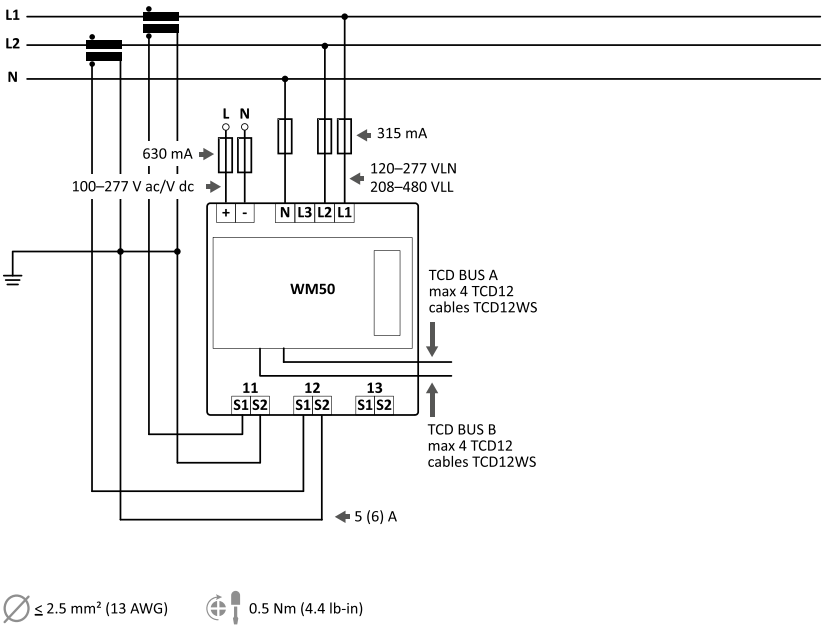

Fig. 2 *Two-phase system with neutral (3-wire)*

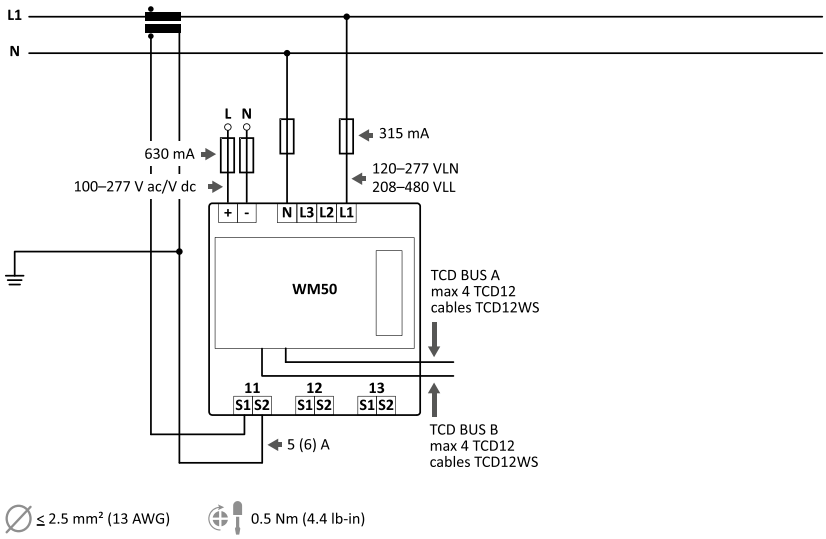

Fig. 3 *Single-phase system with neutral (2-wire)*

References

How to order

WM50 AV5 3 H BC

Further reading

Information	Where to find it
Instruction manual - WM50	www.productselection.net/MANUALS/UK/WM50_im_use.pdf
Installation instruction - WM50	www.productselection.net/MANUALS/UK/WM50_im_inst.pdf

CARLO GAVAZZI compatible components

Purpose	Component name/part number	Notes
Single channel current measurement accessories	TCD12	Split core current sensors for bus cable, see "TCD12 current sensor"
Main line current measurement accessories	CTD1X, CTD2X, CTD3X, CTD4X	Solid core current transformers (1 or 5 A secondary current, 40 to 1600 A primary current) for cable or bus bar. See relevant datasheet
	CTD1Z, CTD2Z, CTD3Z	Solid core current transformers (5 A secondary current, 40 to 600 A primary current) for cable or bus bar. See relevant datasheet
	CTD5S, CTD6S, CTD8S, CTD9S, CTD10S	Split core current transformers (5 A secondary current, 100 to 3200 A primary current) for bus bar. See relevant datasheet
	CTD8V, CTD8V, CTD9V, CTD9H, CTD10V, CTD10H	Solid core current transformers (1 or 5 A secondary current, 150 to 3200 A primary current) for bus bar. See relevant datasheet
	CTD8Q	Solid core current transformers (1 or 5 A secondary current, 1000 to 4000 A primary current) for bus bar. See relevant datasheet
Manage six digital inputs and up to six digital outputs	MFI6O6 MFI6R4	See "Digital input and output modules"
Manage six analog inputs	MATPN	See "Analog input module"
Transmit data to other devices or connect WM50 to UCS	M C 485232 M C ETH	See "Communication modules"
System connection to UCS	OptoProg	See relevant datasheet
Setting up and running WM50 and TCD12 diagnosis from PC	UCS desktop	Application available for free download at: www.productselection.net
Setting up and running WM50 and TCD12 diagnosis from mobile device	UCS Mobile	Application available for free download at Google Play Store
Monitor data from several analyzers	VMU-C	See relevant datasheet
RS485/USB conversion	SIU-PC3	See relevant datasheet

Digital input and output modules

Main features

- Up to six digital outputs (static or relay)
- Three possible functions for each output
- From two to six functions possible for each input, according to the input
- Configuration via UCS or WM50 keypad
- Easy mounting on main unit
- Detachable terminals
- Local bus connection to main unit

Description

WM family analyzer accessory module that connects to the main unit and can manage six digital inputs and six static outputs or four relay outputs.
Expands WM50 monitoring and control capacity, specifically allows tariff management, pulse counting, pulse transmission proportional to energy consumption, output control.

Input and output functions

- Manage up to six rates
- Count connected device pulses
- Synchronize the average value calculation interval
- Reset alarms
- Read digital input status
- Control digital inputs via alarm association
- Control digital inputs via Modbus commands
- Transmit proportional pulses to active or reactive, imported or exported energy consumption

Structure

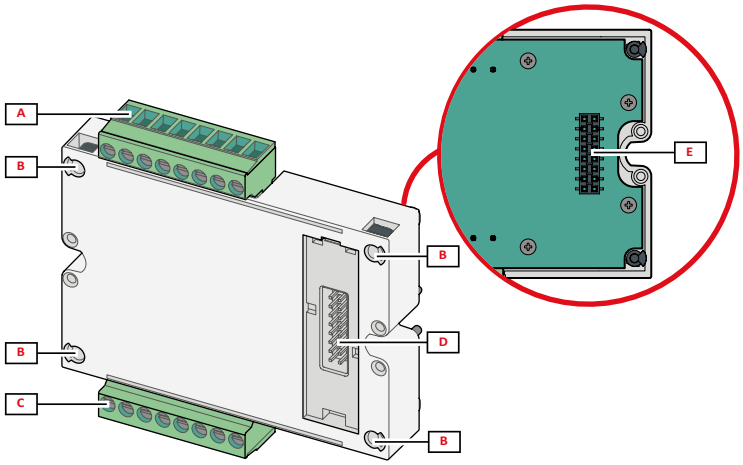

Area	Description
A	Detachable digital input terminal block
B	Main unit fastening pins
C	Detachable digital output terminal block
D	Local bus port for communication module
E	Local bus port for main unit

Features

General

Mounting	On main unit
Weight	80g
Power supply	Self power supply via local bus

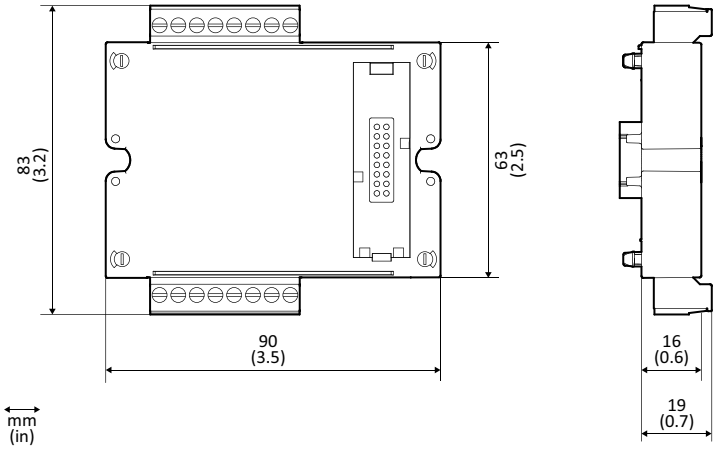

MFI606 module

Inputs	
Number of inputs	6
Input type	Voltage free
Features	Open contact voltage: ≤ 3.3 V dc Closed contact current: < 1 mA dc Open contact resistance: ≥ 50 kΩ Closed contact resistance: ≤ 300 Ω
Configuration parameters	Input function: remote input status reading/rate management/pulse count/alarm reset/average value calculation interval synchronization (dmd) Pulse type and pulse weight ("pulse counting" function only)
Configuration mode	Via keypad or UCS software
Outputs	
Number of inputs	6
Input type	Opto-mosfet
Features	V_{ON}: 2.5 V dc, 100 mA max V_{OFF}: 42 V dc max
Configuration parameters	Output function: alarm/remote control/pulse Normal output status ("alarm" function only) Pulse weight, transmitted energy type, test transmission settings ("pulse" function only)
Configuration mode	Via keypad or UCS software

MFI6R4 module

Inputs	
Number of inputs	6
Input type	Voltage free
Features	Open contact voltage: ≤ 3.3 V dc Closed contact current: < 1 mA dc Open contact resistance: ≥ 50 kΩ Closed contact resistance: ≤ 300 Ω
Configuration parameters	Input function: remote input status reading/rate management/pulse count/alarm reset/average value calculation interval synchronization (dmd) Pulse type and pulse weight ("pulse counting" function only)
Configuration mode	Via keypad or UCS software
Outputs	
Number of inputs	4
Input type	SPDT relay
Features	AC1: 5 A @ 250 V ac AC15: 1 A @ 250 V ac
Configuration parameters	Output function: alarm/remote control/pulse Normal output status ("alarm" function only) Pulse weight, transmitted energy type, test transmission settings ("pulse" function only)
Configuration mode	Via keypad or UCS software

Connection Diagrams

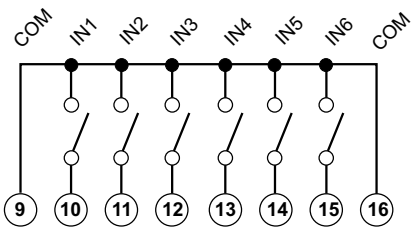

Fig. 4 *M F I6 O6, M F I6 R4: inputs*

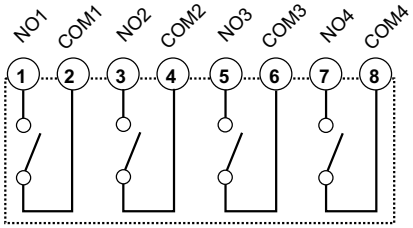

Fig. 5 *M F I6 R4: SPDT relay outputs*

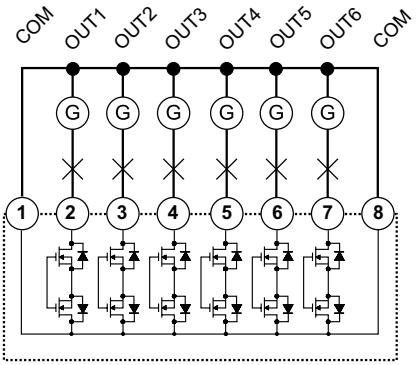

Fig. 6 *M F I6 O6: opto-mosfet outputs*

References

How to order

Code	Description
M F I6 R4	Six digital inputs, four SPDT relay outputs
M F I6 O6	Six digital inputs, six opto-mosfet outputs

Further reading

Information	Document	Where to find it
Module configuration	Instruction manual - WM50	www.productselection.net/MANUALS/UK/WM50_im_use.pdf
Installation and wiring diagram	Instruction WM Manual Modules	www.productselection.net/MANUALS/UK/WM40 MODULES_im.pdf

CARLO GAVAZZI compatible components

Purpose	Component name/code key	Notes
Power the module via analyzer	WM20 WM30 WM40 WM50	See relevant datasheet

Analog input module

Main features

- Three analog inputs
- Configuration via UCS or WM50 keypad
- Easy mounting on main unit
- Detachable terminals
- Local bus connection to main unit

Main functions

- Measure neutral current
- Read the input temperature from PT100 or PT1000 probe
- Read an analog signal from -20 mA to 20 mA in input from another sensor

Description

WM family analyzer accessory module that connects to the main unit and can measure neutral current, compatible probe temperature and other analog signal.

Structure

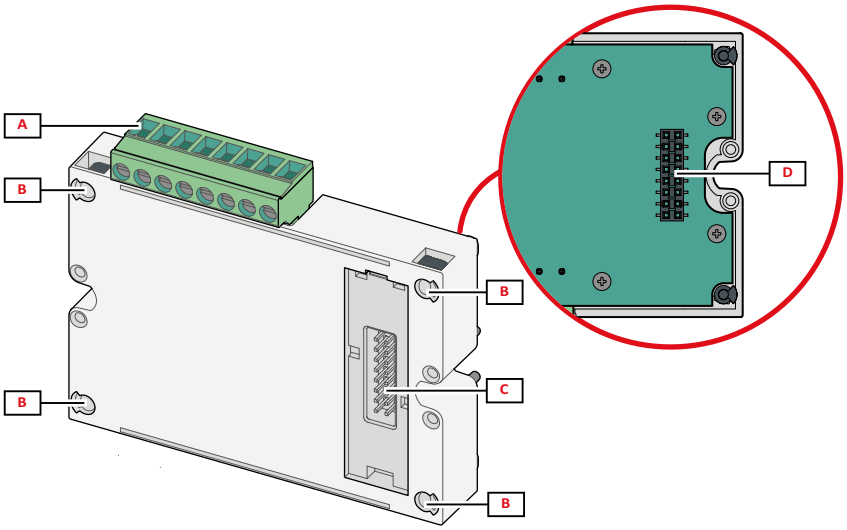

Area	Description
A	Detachable analog input terminal block
B	Main unit fastening pins
C	Local bus port for communication module
D	Local bus port for main unit

Features

General

Mounting	On main unit
Weight	80g
Power supply	Self power supply via local bus

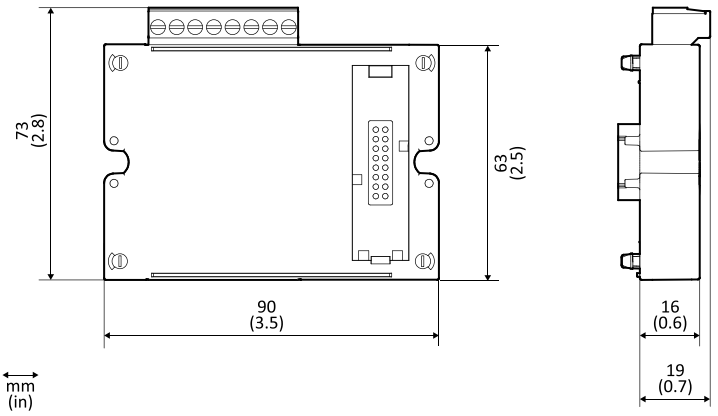

Analog input

Input type	From -20 to 20 mA dc
Accuracy	from 0% to 25% full scale: ±(0.2% rdg + 2dgt) from 25% to 110% full scale: ±(0.1% rdg + 2dgt)
Overload	Continuous: 50 mA dc For 1 s: 150mA dc
Temperature drift	≤ 150ppm/°C
Input impedance	< 12 Ω
Configuration parameters	Minimum and maximum value Value displayed for minimum and maximum value
Configuration mode	Via keypad or UCS software

Temperature probe input

Probe type	Two or three-wire PT100 or PT1000
Measurement range	from -60 to 300 °C (from -76 to 572 °F) with PT100 probe; from -60 to 300 °C (from -76 to 572 °F) with PT1000 probe
Accuracy	±(0,5% rdg + 5dgt)
Compensation	up to 10 Ω
Temperature drift	≤ 150ppm/°C
Configuration parameters	Unit of measure Probe type
Configuration mode	Via keypad or UCS software

Neutral current input

Rated current (In)	1 A
Accuracy	±(0,5% rdg + 2dgt) from 0.01 In to 0.05 In; ±(0,2% rdg + 2dgt) from 0.05 In to 1.2 In.
Overload	Continuous: 1.2 In For 500 ms: 10 In
Temperature drift	≤ 150ppm/°C
Input impedance	0.5 Ω
Configuration parameters	Current transformer ratio
Configuration mode	Via keypad or UCS software

Connection Diagrams

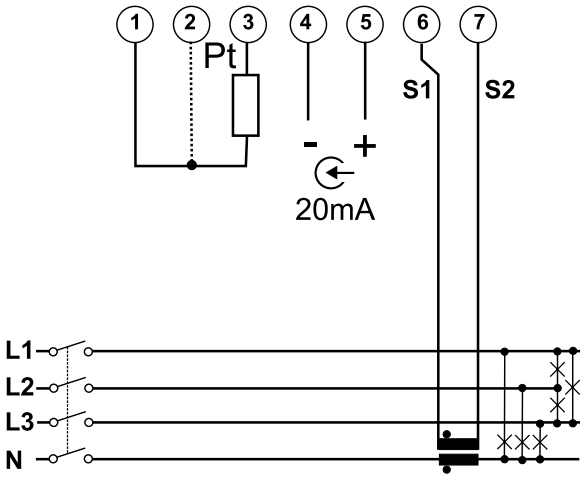

References

How to order

M A T P N

Further reading

Information	Document	Where to find it
Module configuration	Instruction manual - WM50	www.productselection.net/MANUALS/UK/WM50_im_use.pdf
Installation and wiring diagram	Instruction WM Manual Modules	www.productselection.net/MANUALS/UK/WM40 MODULES_im.pdf

CARLO GAVAZZI compatible components

Purpose	Component name/code key	Notes
Power the module via analyzer	WM20 WM30 WM40 WM50	See relevant datasheet

Communication modules

Main features

- Modbus protocol
- Configuration via UCS or WM50 keypad

Main functions

- Transmit data remotely
- WM50 connection to UCS
- Easy mounting on main unit
- Local bus connection to main unit

Description

WM family analyzer accessory module that connects to the main unit and can connect WM50 to UCS to configure WM50 and TCD12 current sensors and remotely transmit data using Modbus protocol.

Structure

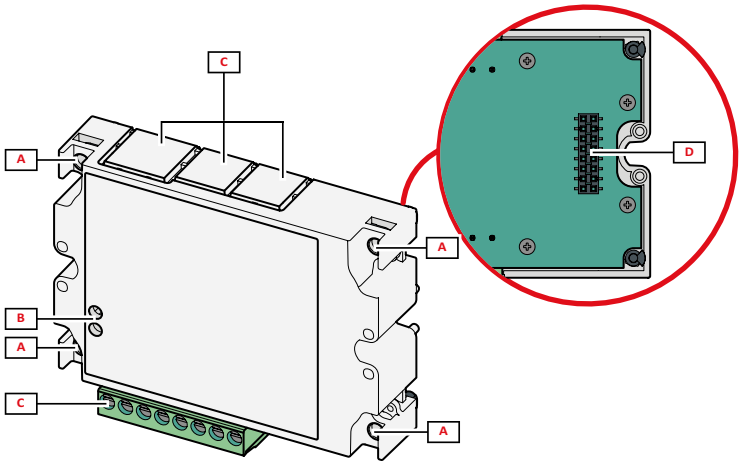

NOTE: the image refers to the M C 485 232 module.

Area	Description
A	Main unit fastening pins
B	M C 485232 only. Communication status LED
C	Communication port area
D	Local bus port for main unit or digital input/output module or analog input module

Features

General

Mounting	On main unit
Weight	80g
Power supply	Self power supply via local bus

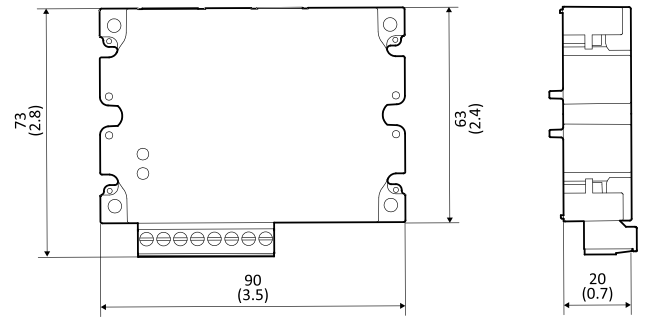

Fig. 7 *M C 485 232*

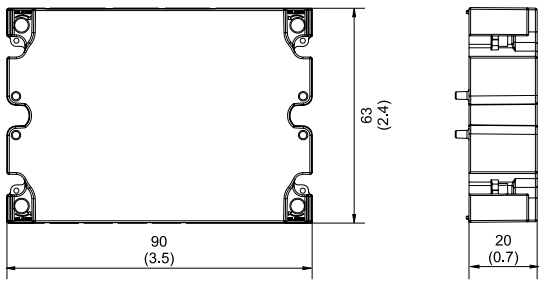

Fig. 8 *M C ETH*

mm
(in)

M C 485232 module

RS485 port	
Protocols	Modbus RTU
Devices on the same bus	Max 160 (1/5 unit load)
Communication type	Multidrop, bidirectional
Connection type	2 wires, maximum distance 1000 m
Configuration parameters	Modbus address (from 1 to 247) Baud rate (9,6/ 19,2/ 38,4/ 115,2 kbps) Parity (None/ Odd/ Even)
Configuration mode	Via keypad or UCS software

RS232 port	
Protocols	Modbus RTU
Communication type	Bidirectional
Connection type	3 wires, maximum distance 15 m
Configuration parameters	Modbus address (from 1 to 247) Baud rate (9,6/ 19,2/ 38,4/ 115,2 kbps) Parity (None/ Odd/ Even)
Configuration mode	Via keypad or UCS software

NOTE: the RS485 and RS232 ports are alternative.

LED	
Meaning	Communication status: Yellow: receiving Green: transmitting

M C ETH module

Ethernet port	
Protocols	Modbus TCP/IP
Client connections	Maximum 5 simultaneously
Connection type	RJ45 connector (10 Base-T, 100 Base-TX), maximum distance 100 m
Configuration parameters	IP address Subnet mask Gateway TCP/IP port
Configuration mode	Via keypad or UCS software

Connection Diagrams

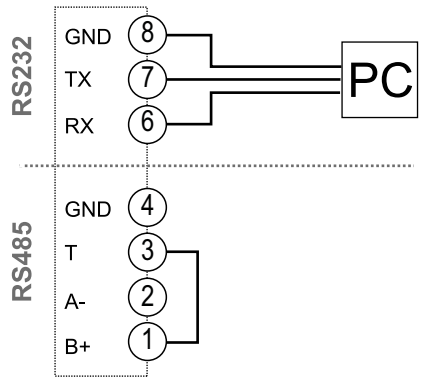

Fig. 9 *M C 485232. RS232 serial port.*

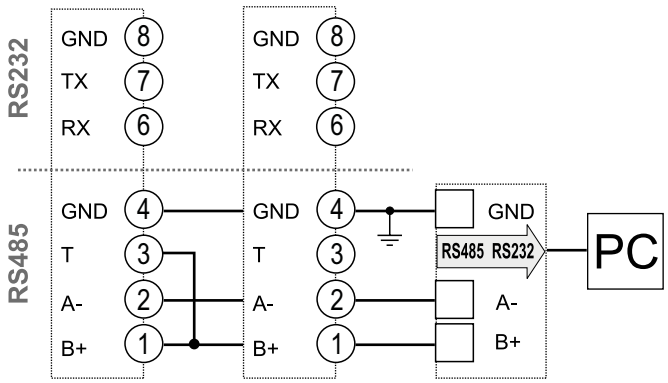

Fig. 10 *M C 485232. RS485 serial port.*

NOTE: additional meters with RS485 are connected in daisy chain. The serial output must only be terminated on the last network meter connecting terminals B+ and T.

References

How to order

Code	Description
MC 485232	Modbus RTU communication on RS485/RS232
MC ETH	Modbus TCP/IP communication on Ethernet

Further reading

Information	Document	Where to find it
Module configuration	Instruction manual - WM50	www.productselection.net/MANUALS/UK/WM50_im_use.pdf
Installation and wiring diagram	Instruction WM Manual Modules	www.productselection.net/MANUALS/UK/WM40 MODULES_im.pdf

CARLO GAVAZZI compatible components

Purpose	Component name/code key	Notes
Power the module via analyzer	WM20 WM30 WM40 WM50	The analog input module only works connected to an analyzer. See relevant datasheet

TCD12

Description

12-channel split core current sensor for power analyzer WM50.
This manages primary current up to 32 A and the value is read automatically by the WM50 to eliminate the need for configuration and calibration by the user.
It is equipped with proprietary connectors for simple connection to the analyzer.
Up to eight TCD12s can be connected per WM50 and set via UCS.

Main features

- 12 split core current transformers
- Up to four TCD12s in series for each WM50 TCD12 bus port
- Primary current 32 A
- Hole diameter: 8.5 mm
- Distance between hole centers: 17.5 mm
- Connection to WM50 or other TCD12 with proprietary cables
- Mounting on panel or DIN rail
- Cable fastening clips during installation
- Fastening screws to avoid accidental opening and guarantee measurement precision
- Configuration via UCS

Main functions

- Measure current and other electrical variables on up to 12 channels
- Measure power and energy per single channel without the need for additional voltage references
- Send data to WM50

Structure

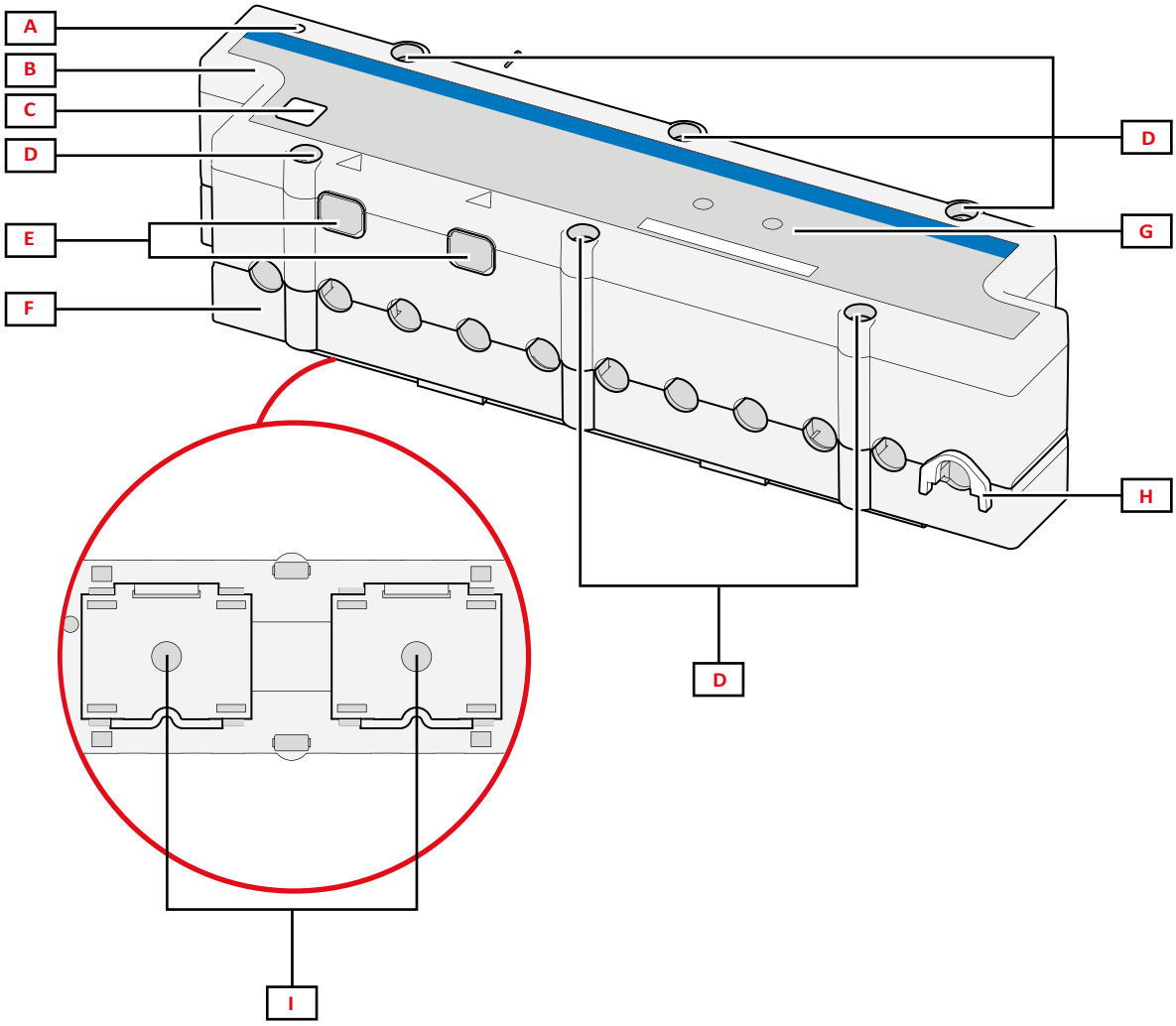

Area	Description
A	Indicator of the channel considered by default as the first one of the managed channel group. The order can be reversed during configuration.
B	Top
C	Device identification marking area
D	Top and bottom fastening screws
E	Connection port with WM50 or other TCD12 via TCD12WS cable
F	Bottom
G	Status LED: COM: communications ON: power supply
H	Removable clips for cable fastening
I	Removable adapters for DIN rail mounting

Features

General

Material	PPO, self-extinguishing V-0 (UL 94)
Protection degree	Front: IP50
Connection to WM50	With TCD12WS cables
Overvoltage category	Cat. III
Pollution degree	2
MTBF/MTTF	Minimum 15 years
Insulation	60 s, 1500 V ac (with TCD12WS cables connected)
Power supply	Self power supply via TCD bus
Mounting	On back panel by two screws On DIN rail by mounting adapters
Weight	350 g (packaging included)

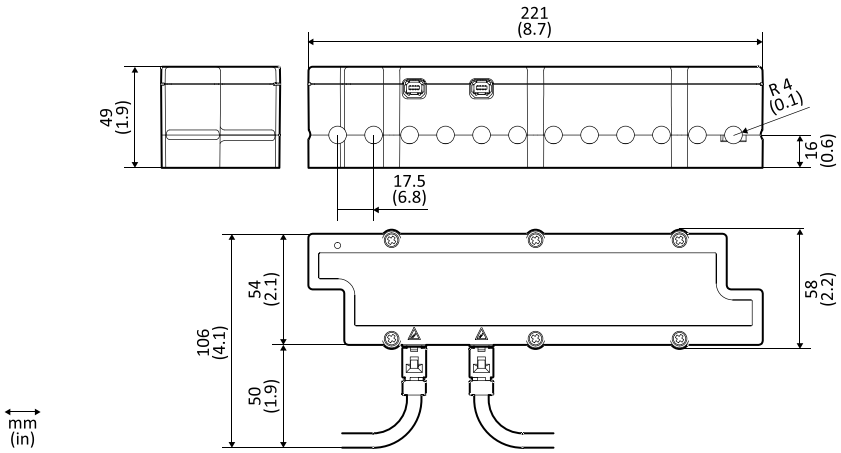

Environmental specifications

Operating temperature	From -25 to +40 °C/from -13 to +104 °F
Storage temperature	From -30 to +70 °C/from -22 to +158 °F

NOTE: R.H. < 90 % non-condensing @ 40 °C / 104 °F.

Electrical specifications

Current connection	Bus cable
CT transformation ratio	-
Rated current (In)	32 A
Base current (Ib)	10 A
Minimum current (Imin)	0.5 A
Maximum current (Imax)	40 A
Start-up current (Ist)	40 mA
Overload	Continuous: 2 Imax For 500 ms: 20 Imax
Input impedance	-

LED

COM (yellow)	Communication status with WM50
ON (green)	Power supply status

Compatibility and conformity

Directives	2014/35/EU (Low Voltage) 2014/30/EU (Electro Magnetic Compatibility) 2011/65/EU (Electric-electronic equipment hazardous substances)
Standards	Electromagnetic compatibility (EMC) - emissions and immunity: EN61000-6-2, EN61000-6-3 (V ac power supply)EN61000-6-4 (V dc power supply) Electrical safety: EN61010-1 Metrology: EN62053-22EN62053-23 Pulse outputs: IEC62053-31, DIN43864
Approvals	CE c UL us LISTED

Connection Diagrams

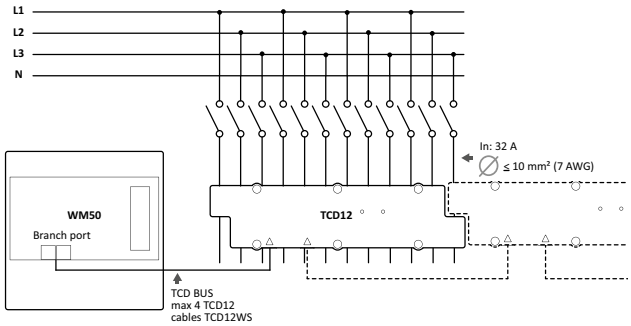

Fig. 11 *Three-phase system with neutral (4-wire).*

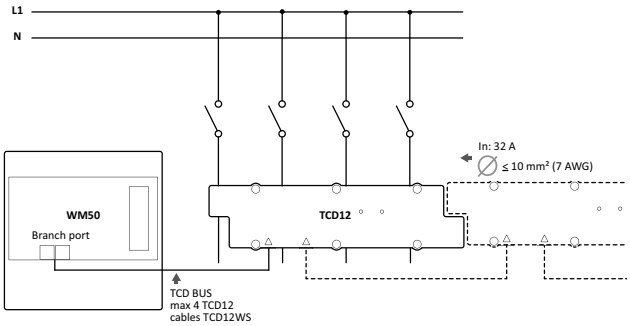

Fig. 12 *Single-phase system with neutral (2-wire)*

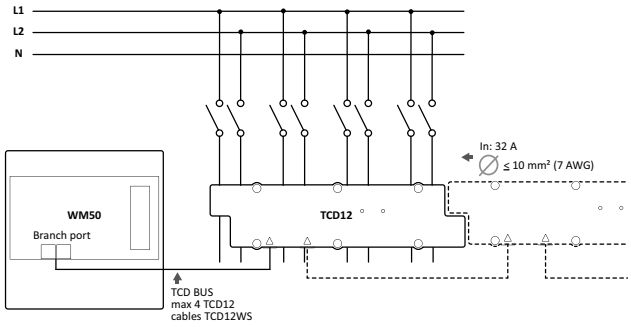

Fig. 13 *Two-phase system with neutral (3-wire)*

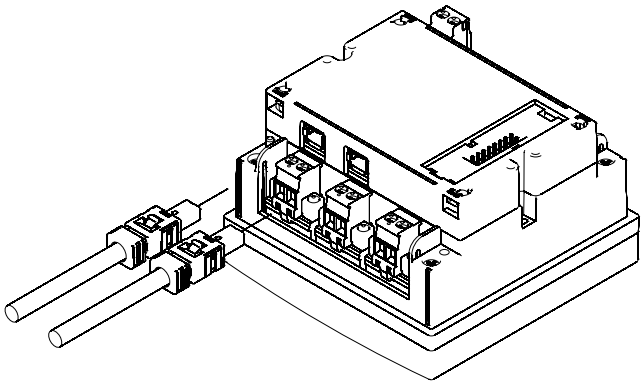

Fig. 14 *Connection with WM50*

References

How to order

Code	Options	Description
TCD12BS32AX	-	12-channel current sensor
TCD12WSS2TI ☐	Enter the part number, replacing the symbol ☐ with the cable length (3 digits). Lengths available: 30, 50, 100, 200, 300, 500 cm.	Connection cables with WM50 or other TCD12

Further reading

Information	Document	Where to find it
Installation	Installation instruction - TCD12	www.productselection.net/MANUALS/UK/TCD12_im.pdf
TCD12 configuration	Instruction manual - WM50	www.productselection.net/MANUALS/UK/WM50_im_use.pdf

CARLO GAVAZZI compatible components

Purpose	Component name/part number	Notes
Measure and display connected load data	WM50	See relevant datasheet

COPYRIGHT ©2017
Content subject to change. Download the PDF: www.productselection.net