STD03Y-H ✔ ACTIVE

Agastat 7000

TE Internal #: 361720-000

Yellow Pre-Printed Marker, Snap-On, Size STD 03, Printed Marking H, Black Print, Straight Cut, Polyoxymethylene, Agastat 7000

View on TE.com >

Identification & Labeling > Pre-Printed Markers > STD Snap-On Markers

Marker Style: **Snap-On**

Marker Size: **STD 03**

Compatible Cable Diameter Range: **1.9 – 2.6 mm [.075 – .102 in]**

Primary Product Color: **Yellow**

Marker Cut: **Straight**

All STD Snap-On Markers (957)

Features

Body Features

Marker Style	Snap-On
Marker Size	STD 03
Primary Product Color	Yellow
Primary Product Material	Polyoxymethylene

Dimensions

Compatible Cable Diameter Range	1.9 – 2.6 mm[.075 – .102 in]

Printer/Label Features

Marker Cut	Straight
Marking Details	H

Packaging Features

Packaging Method	Strip
Packaging Quantity	300

Other

Printed Marking Color	Black

Product Compliance

For compliance documentation, visit the product page on TE.com>

EU RoHS Directive 2011/65/EU	Compliant
EU ELV Directive 2000/53/EC	Compliant
China RoHS 2 Directive MIIT Order No 32, 2016	有害物质含量符合标准要求 No Restricted Substance(s) Above Threshold
EU REACH Regulation (EC) No. 1907/2006	Current ECHA Candidate List: JUNE 2025 (250) Candidate List Declared Against: JAN 2025 (247) Does not contain REACH SVHC
Halogen Content	BFR/CFR/PVC Free, but Br/Cl >900 ppm in other sources.
Solder Process Capability	Not applicable for solder process capability

Product Compliance Disclaimer

This information is provided based on reasonable inquiry of our suppliers and represents our current actual knowledge based on the information they provided. This information is subject to change. The part numbers that TE has identified as EU RoHS compliant have a maximum concentration of 0.1% by weight in homogenous materials for lead, hexavalent chromium, mercury, PBB, PBDE, DBP, BBP, DEHP, DIBP, and 0.01% for cadmium, or qualify for an exemption to these limits as defined in the Annexes of Directive 2011/65/EU (RoHS2). Finished electrical and electronic equipment products will be CE marked as required by Directive 2011/65/EU. Components may not be CE marked. Additionally, the part numbers that TE has identified as EU ELV compliant have a maximum concentration of 0.1% by weight in homogenous materials for lead, hexavalent chromium, and mercury, and 0.01% for cadmium, or qualify for an exemption to these limits as defined in the Annexes of Directive 2000/53/EC (ELV). Regarding the REACH Regulation, the information TE provides on SVHC in articles for this part number is based on the latest European Chemicals Agency (ECHA) 'Guidance on requirements for substances in articles' posted at this URL: https://echa.europa.eu/guidance-documents/guidance-on-reach

Compatible Parts

TE Part # 321874-000
STD03W-0

Also in the Series | Agastat 7000

Pre-Printed Markers(957)

Time Delay Relays(39)

Customers Also Bought

TE Part #114017-ZZ
SEALING PLUG, SIZE 12/16, WHT

TE Part #CAT-D48-ST273
DEUTSCH Connector Solid Contacts

TE Part #CAT-D487-W416
Wedgelocks: DEUTSCH DT

TE Part #DT06-2S
PLG, 2P, GRY, N

TE Part #DT04-2P
REC, 2P, GRY, N

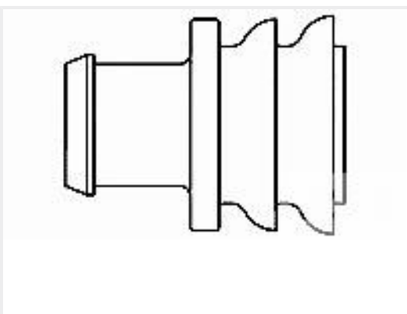

TE Part #281934-2
SINGLE WIRE SEAL

TE Part #CAT-AM71-CH8172
AMP SUPERSEAL 1.5MM, CONNECTOR HOUSING

Documents

Product Drawings

STD03Y-H

English

Datasheets & Catalog Pages

STD and STB Technical Datasheet

English

STD/STB-type Snap-on Pre-printed Wire & Cable Markers

English

IDENTIFICATION SELECTION GUIDE

English

Cable Identification Product Shelf Life

English

Product Specifications

RW-2538 STD and STB work instruction

English