Table 1:

P/N.	connector	Cable	White Print
SSL12-P2LP0-MXXFXX	White	White	Without
SSL12-P2LP0-MXXHXX	Black	Black	With

REV.	ECN NO.	DATE	SIGN	DESCRIPTION
A	Initial Release	2017-05-16	Fisher Wang	Rev. 01 to A
B	C210960	2021-06-25	Carl Dong	△B x1

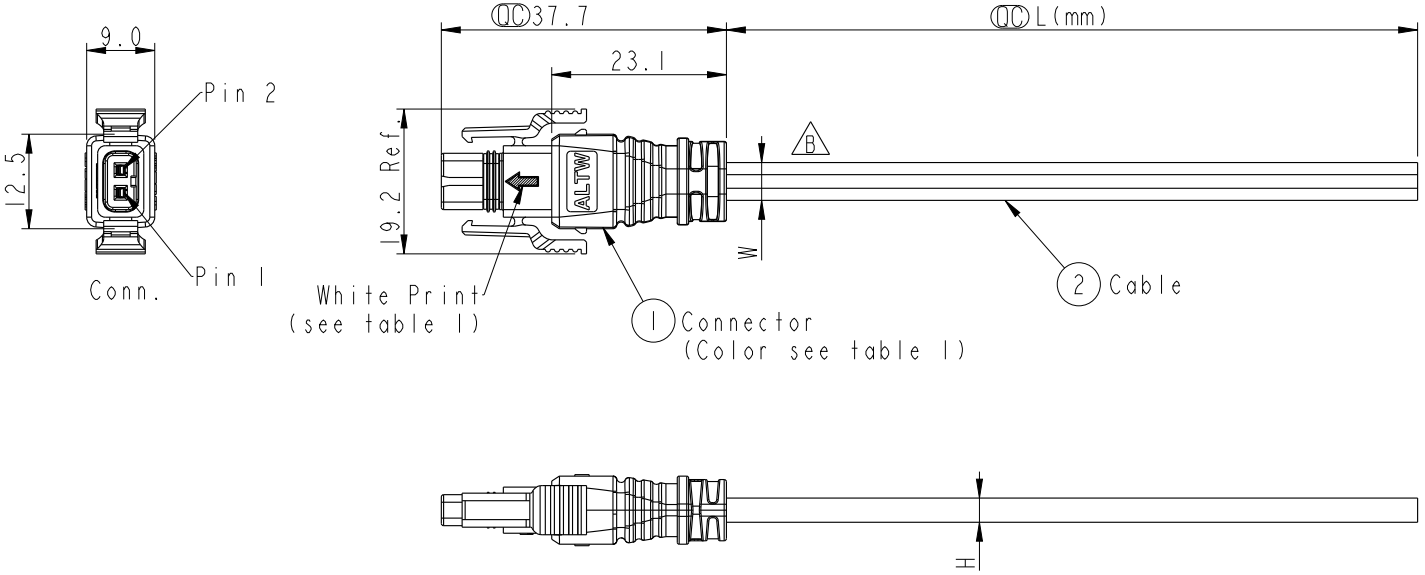

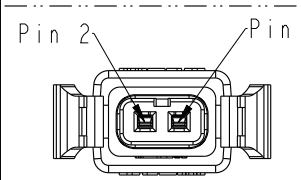

Conn	Wire Color
2	Red 紅
1	Brown 棕

Pin Out

SSL12-P2LP0-MXX X XX

XX: 1M~99M
01: 1M
02: 2M
:
99: 99M

F: White
H: Black

18: 18AWG(W=5.3,H=3.4)
20: 20AWG(W=5.0,H=3.2)

Cable Length Tolerance:

01M:	±40mm
02M~06M:	±60mm
06M~10M:	±100mm
11M~30M:	±200mm
31M~99M:	±500mm

Notes:
* QC Important Dimension To Check.
* Current Rating:5A
* Voltage Rating:300V DC/AC
* Waterproof Rate:IP68(mating)
  1M Depth Of Water In 24 Hours.
* Housing: Thermoplastic, UL94V-0,
  color see table 1.
* Terminal:Copper Alloy, Gold Plated.
* Gasket:Silicone, Gray.
* Seals: Silicone, Gray.
* Cable:UL21996, Flat Cable, UV Resistance,
  color see table 1.
* Temperature Range: -40~+105℃

UNIT:mm

±0.5

TITLE: SSL1.2 2P,PLUG CONN+FLAT CABLE

SCALE: Free | SIZE: A4 | SHEET 1 OF 1

REV. B | WC-REV. A.7 | QC:Inspection item

Amphenol LTW
安費諾亮泰企業股份有限公司

ITEM NO	DRAWN BY: Fisher Wang	DATE: 2017-05-16
DWG NO: SSL12-P2LP0-MXXXXX	CHECKED BY: Victor Hung	DATE: 2017-05-16
CUSTOMER: ALTW	APPROVED BY: Kevin Hu	DATE: 2017-05-16

THIS DOCUMENT IS SUBJECT TO CHANGE WITHOUT NOTICE. IT IS CONFIDENTIAL AND A PROPERTY OF Amphenol LTW. DISCLOSURE TO THIRD PARTY HAS TO BE AUTHORIZED BY Amphenol LTW.