REV.	ECN NO.	DATE	SIGN	DESCRIPTION
A	Initial Release	2017-05-17	Fisher Wang	Rev. 01 to A
B	C210960	2021-06-25	Carl Dong	B x1

Table 1:

P/N.	connector	Cable	White Print
SSL12-J4LJ0-0XXFXX	White	White	Without
SSL12-J4LJ0-0XXHXX	Black	Black	With

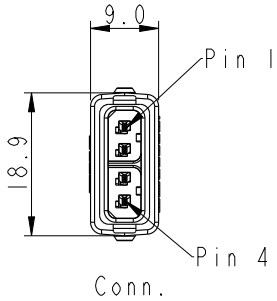

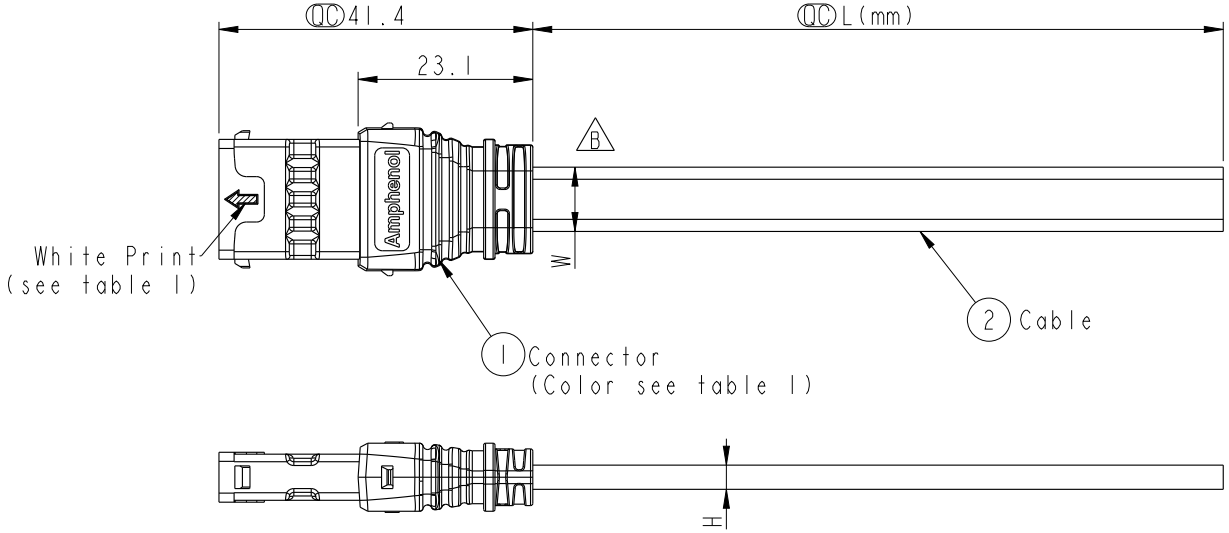

ALTW
CONFIDENTIAL
2017-05-17
R&D DEPT.

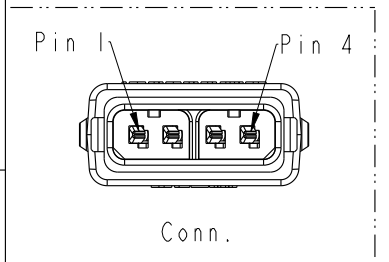

Conn	Wire Color
4	Yellow 黃
3	Orange 橘
2	Red 紅
1	Brown 棕

Pin out

SSL12-J4LJ0-0XX X XX

- XX: 1M~99M
  - 01: 1M
  - 02: 2M
  - :
  - 99: 99M
- F: White
- H: Black
- 18: 18AWG(W=9.2,H=3.4)
- 20: 20AWG(W=8.5,H=3.2)

Cable Length Tolerance:

01M:	±40mm
02M~06M:	±60mm
06M~10M:	±100mm
11M~30M:	±200mm
31M~99M:	±500mm

Notes:
* QC Important Dimension To Check.
* Current Rating:5A
* Voltage Rating:300V DC/AC
* Waterproof Rate:IP68(mating) 1M Depth Of Water In 24 Hours.
* Housing: Thermoplastic, UL94V-0, color see table 1.
* Terminal:Copper Alloy, Gold Plated.
* Seals: Silicone, Gray.
* Cable:UL21996, Flat Cable, UV Resistance, color see table 1.
* Temperature Range: -40~+105℃

UNIT:mm

±0.5

TITLE: SSL1.2 4P, JACK CONN+FLAT CABLE			
SCALE: Free	SIZE: A4	SHEET 1 OF 1	
REV.: B	WC-REV.: A.4	QC: Inspection item	

Amphenol LTW
安費諾亮泰企業股份有限公司

ITEM NO		DRAWN BY: Fisher Wang	DATE: 2017-05-17
DWG NO: SSL12-J4LJ0-0XXXXX		CHECKED BY: Victor Hung	DATE: 2017-05-17
CUSTOMER: ALTW		APPROVED BY: Kevin Hu	DATE: 2017-05-17

THIS DOCUMENT IS SUBJECT TO CHANGE WITHOUT NOTICE. IT IS CONFIDENTIAL AND A PROPERTY OF Amphenol LTW. DISCLOSURE TO THIRD PARTY HAS TO BE AUTHORIZED BY Amphenol LTW.