Honeywell

High Sensitivity Latching Digital Hall-effect Sensor ICs: *32312441*

SS360NT, SS360ST, SS360ST-10K, SS460S, SS460S-T2, SS460S-T3 SS460S-LP

Issue F

Datasheet

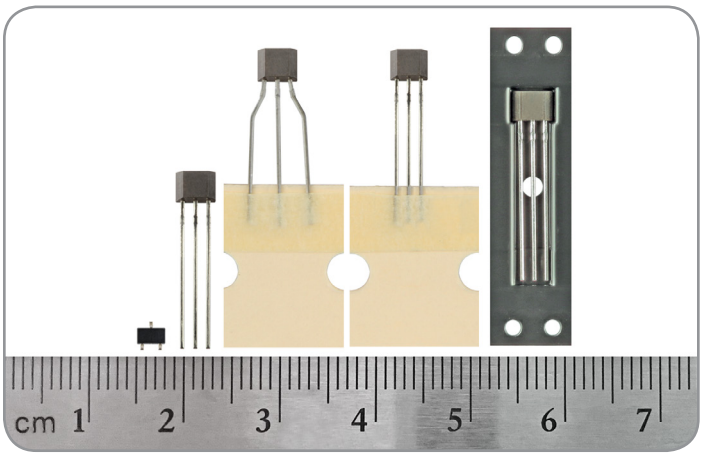

DESCRIPTION

The SS360NT, SS360ST, SS360ST-10K, SS460S, SS460S-T2, SS460S-T3, and SS460S-LP High Sensitivity Latching Digital Hall-Effect Sensor ICs are small, sensitive and versatile devices that are operated by the magnetic field from a permanent magnet or an electromagnet. They are designed to respond to alternating North and South poles. The SS360NT is turned on by a North pole while the SS360ST, SS460S, SS460S-T2, SS460S-T3, and SS460S-LP are turned on by a South pole. These sensor ICs offer reliable switching points with a high magnetic sensitivity of 30 G typical (55 G maximum). They do not use chopper stabilization on the Hall element, providing a clean output signal and a faster latch response time when compared to competitive high sensitivity Hall-effect latching sensor ICs which do use chopper stabilization. These products offer reverse polarity protection, deliver a stable output over a -40°C to 150°C temperature range, and can accept any dc supply voltage from 3 Vdc to 24 Vdc. For brushless dc motor manufacturers who need latching sensors with reliable, consistent performance for more efficient and smaller designs, Honeywell's High Sensitivity Hall-Effect Latching Digital Sensor ICs respond to low magnetic fields and offer consistent repeatability while delivering faster response times to a change in magnetic field for better motor efficiency.

These products are available in five package styles:

- **SS360NT, SS360ST, SS360ST-10K:** SOT-23 surface-mount package, pocket tape and reel
- **SS460S**: Flat TO-92-style with straight standard leads, bulk package
- **SS460S-T2:** Flat TO-92-style with formed leads, ammopack tape-in-box
- **S460S-T3:** Flat TO-92-style with straight standard leads, ammopack tape-in-box
- **SS460S-LP**: Flat TO-92-style with straight, long leads, pocket tape and reel

FEATURES

- Fastest response time in its class
- No-chopper-stabilization
- High sensitivity
- Latching magnetics
- Wide operating voltage range of 3 Vdc to 24 Vdc
- Built-in reverse voltage
- Durable design
- RoHS-compliant material meets Directive 2002/95

POTENTIAL APPLICATIONS

Industrial/commercial

- Brushless dc motor commutation
- Speed and RPM sensing in electric motors and fans
- Tachometer, counter pickup
- Robotics control
- Flow-rate sensing for appliances

Transportation

- Brushless dc motor commutation
- Electronic window lift, anti-pinch power window systems
- Vehicle convertible roof position

Medical

- Medical equipment using electric motors

PORTFOLIO

The SS360NT, SS360ST, SS360ST-10K, SS460S, SS460S-T2, SS460S-T3, SS460S-LP are a part of Honeywell's family of Latching Digital Hall-effect Sensor ICs which also include:

- VF360NT, VF360ST, VF460SP
- SS360PT, SS460P, SS460P-T2
- SS361CT, SS461C
- SS361RT, SS461R
- SS400 Series, SS500 (select catalog listings)
- VF526DT (dual outputs)

Table 1. Electrical and Environmental Specifications
(At V_s = 3.0 Vdc to 24.0 Vdc, 20 mA load, T_A = –40°C to 150°C except where otherwise specified.

Characteristic	Condition	Min.	Typ.	Max.	Unit
Supply voltage SS360NT, SS360ST, SS360ST-10K SS360NT, SS360ST, SS360ST-10K SS460S, SS460S-T2, SS460S-T3, SS460S-LP	 -40°C to 125°C 150°C —	 3.0 3.0 3.0	 — — —	 24.0 12.0 24.0	Vdc
Supply current	V_{supply} = 3 Vdc at 25°C —	— —	3.5 —	6.0 8.0	mA
Output current	—	—	—	20	mA
V_{sat} SS360NT, SS360ST, SS360ST-10K SS460S, SS460S-T2, SS460S-T3, SS460S-LP	 Gauss > 55 15 mA, Gauss > 55	 — —	 — —	 0.6 0.6	V
Output leakage current	Gauss < -55	—	—	10.0	µA
Rise/fall time	25°C	—	—	1.5	µs
Thermal resistance: SS360NT, SS360ST, SS360ST-10K SS460S, SS460S-T2, SS460S-T3, SS460S-LP	 single layer, single sided PCB —	 — —	 303 233	 — —	°C/W
Magnetic characteristics: operate (Bop) release (Brp) differential	 — — —	 5 -55 40	 30 -30 60	 55 -5 80	Gauss
Operating temperature	—	-40	—	150	°C
Storage temperature: SS360NT, SS360ST, SS360ST-10K SS460S, SS460S-T2, SS460S-T3, SS460S-LP	 — —	 -40 -40	 — —	 150 165	°C
Soldering temperature and time: SS360NT, SS360ST, SS360ST-10K SS460S, SS460S-T2, SS460S-T3, SS460S-LP	 infrared reflow process: peak temperature 245°C for 10 s max. wave soldering process: 250°C to 260°C for 3 s max.				

NOTICE

These Hall-effect sensor ICs may have an initial output in either the ON or OFF state if powered up with an applied magnetic field in the differential zone (applied magnetic field >Brp and <Bop). Honeywell recommends allowing 10 µs after supply voltage has reached 5 V (SS360NT, SS360ST, SS360ST-10K) or 3 V (SS460S, SS460S-T2, SS460S-T3, SS460S-LP) for the output voltage to stabilize.

NOTICE

The magnetic field strength (Gauss) required to cause the switch to change state (operate and release) will be as specified in the magnetic characteristics. To test the switch against the specified limits, the switch must be placed in a uniform magnetic field.

CAUTION
ELECTROSTATIC SENSITIVE DEVICES
DO NOT OPEN OR HANDLE EXCEPT AT A STATIC FREE WORKSTATION

ESD SENSITIVITY: CLASS 3a

Table 2. Absolute Maximum Specifications

Characteristic	Min.	Typ.	Max.	Unit
Supply voltage	-26.0	—	26.0	V
Applied output voltage	-0.5	—	26.0	V
Output current	—	—	25	mA
Magnetic flux	—	—	no limit	Gauss

NOTICE

Absolute maximum ratings are the extreme limits the device will momentarily withstand without damage to the device. Electrical and mechanical characteristics are not guaranteed if the rated voltage and/or currents are exceeded, nor will the device necessarily operate at absolute maximum ratings.

Figure 1. Sensor IC Block Diagram

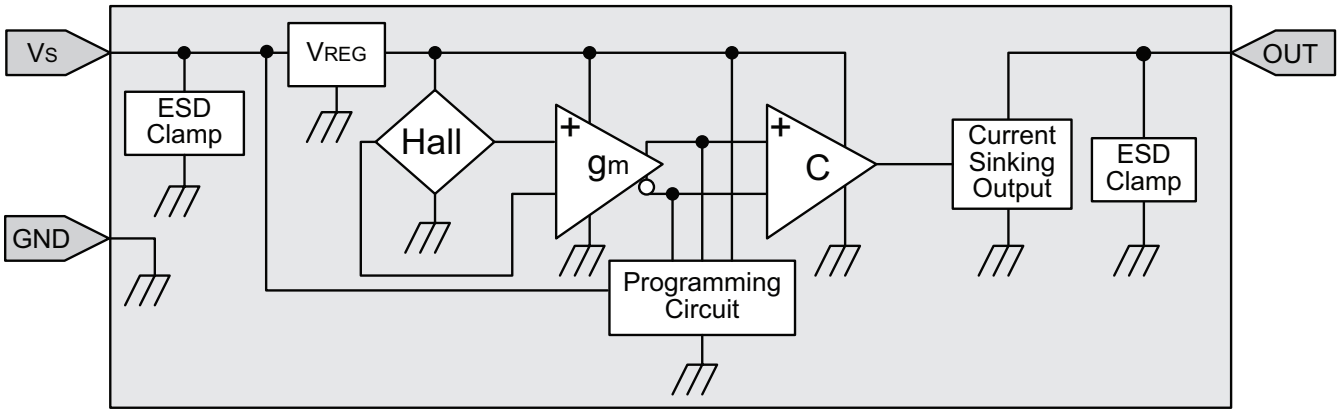

Figure 2. Typical Magnetic Characteristics vs Ambient Temperature at Supply Voltages

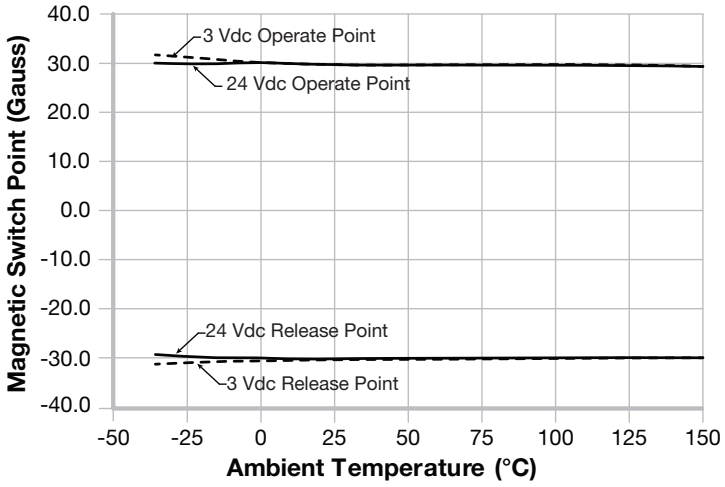

Figure 3. SS360NT, SS360ST, SS360ST-10K Maximum Rated Supply Voltage vs Temperature

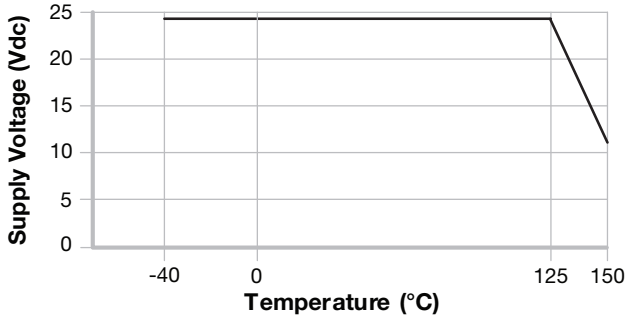

Figure 4. Magnetic Activation

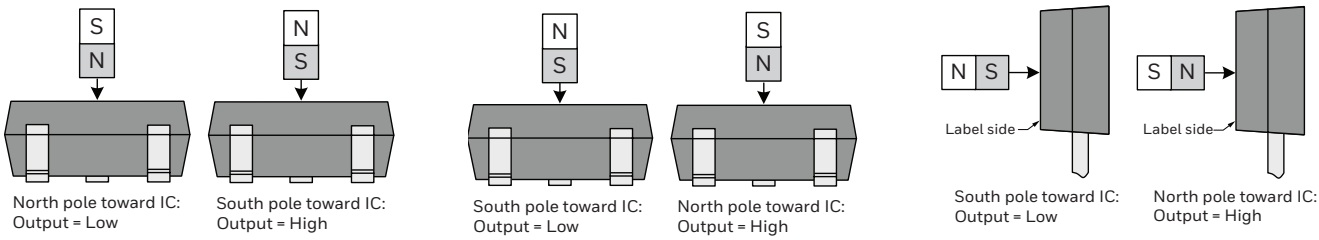

Figure 5. SS360NT, SS360ST and SS360ST-10K Sensor IC, Tape and Reel Mounting Dimensions (For reference only. mm)

SS360NT, SS360ST, SS360ST-10K Sensor IC

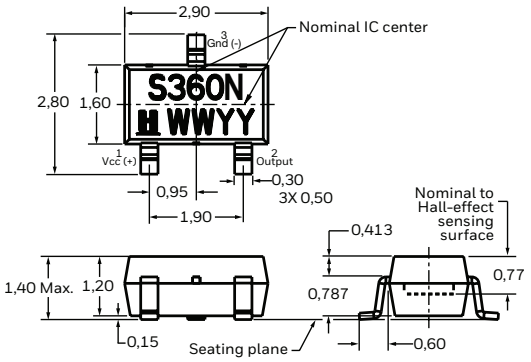

SS360NT, SS360ST, SS360ST-10K Pocket Tape

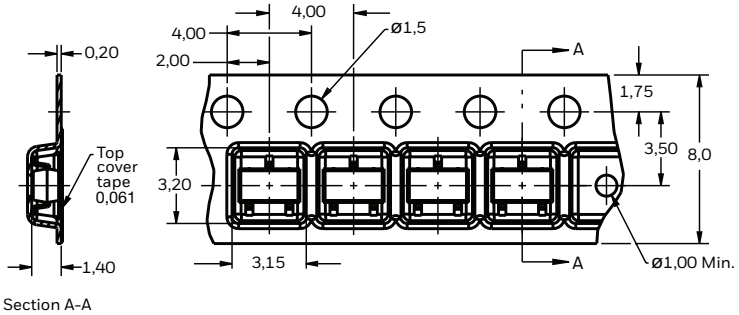

SS360NT, SS360ST
178 mm Reel

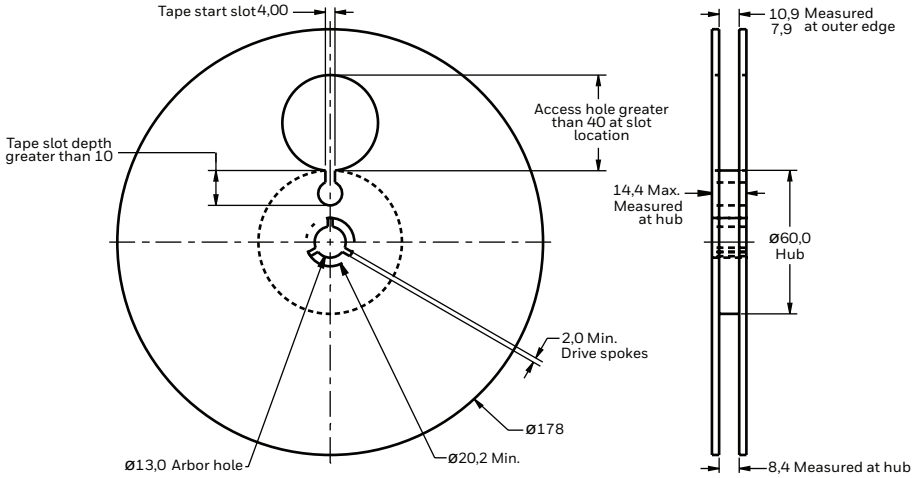

SS360ST-10K
330 mm Reel

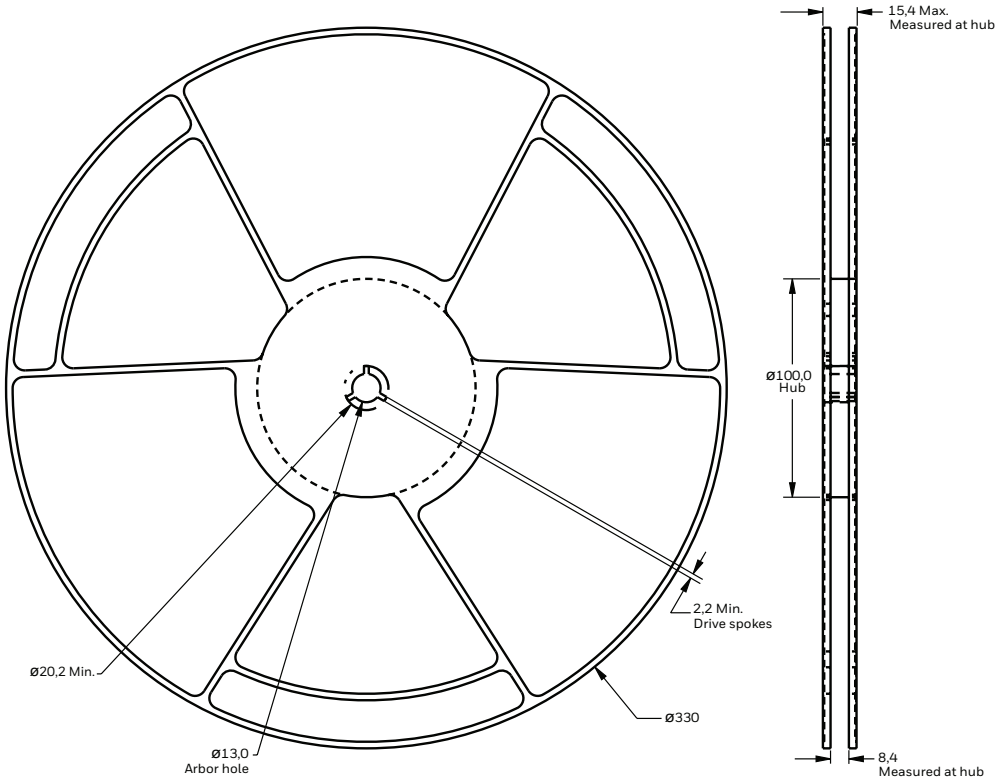

Figure 6. SS460S Sensor IC, SS460S-T2 and SS460S-T3 Sensor IC and Ammopack Tape-in-Box Mounting Dimensions (For reference only. mm)

SS460S, SS460S-T3 Sensor IC

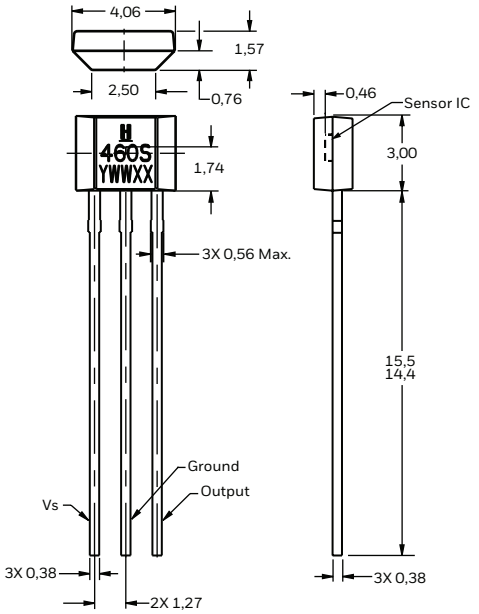

SS460S-T2 Sensor IC

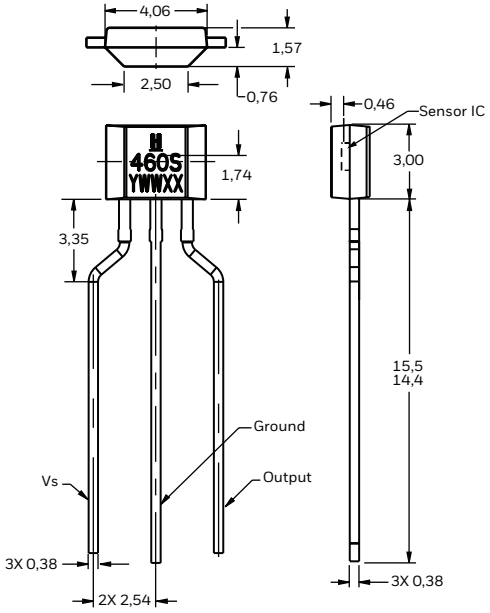

SS460S-T2
Ammopack Tape-in-Box

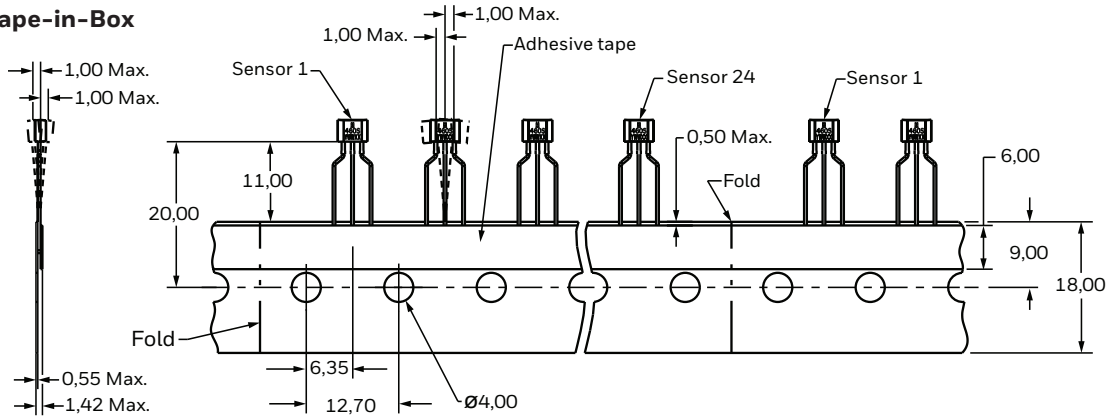

SS460S-T3
Ammopack Tape-in-Box

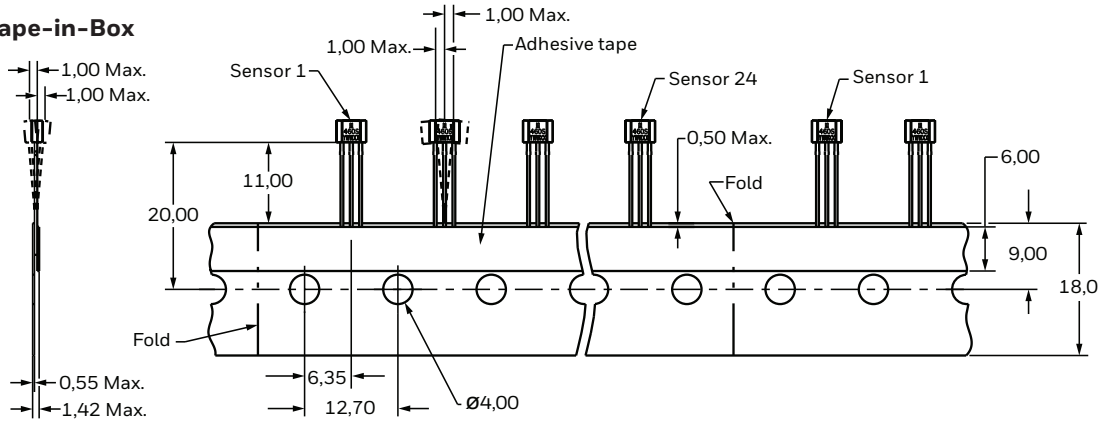

Note: Ensure the minimum hole size in the PCB is 0,68 mm dia. based on the IPC 2222 Level B standard.

Figure 7. SS460-LP Sensor IC, Tape and Reel Mounting Dimensions (For reference only. mm)

SS460-LP Sensor IC

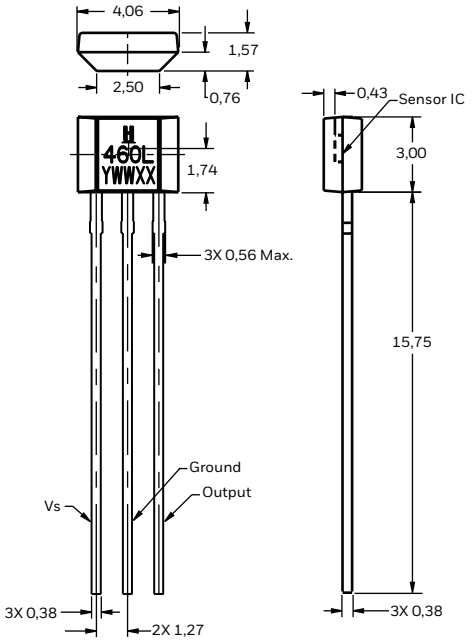

SS460-LP Pocket Tape

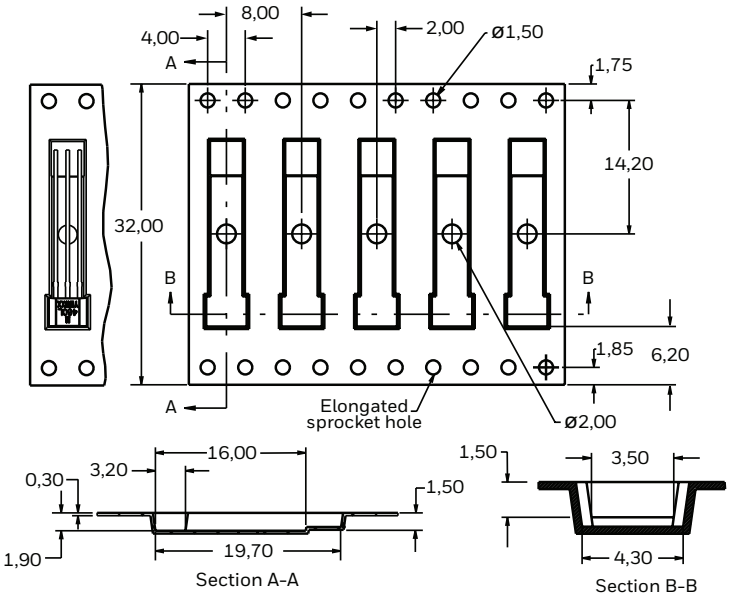

SS460-LP
330 mm Reel

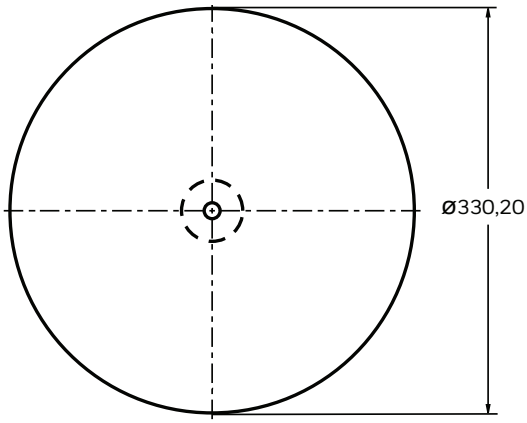

Unreel direction →
- Branded face outward
- Device body on left side
- Elongated sprocket holes on left side
- Pin 1 on leading device edge

High Sensitivity Latching Digital Hall-effect Sensor ICs:
SS360NT, SS360ST, SS360ST-10K, SS460S, SS460S-T2, SS460S-T3, SS460S-LP

Table 3. Order Guide

Catalog Listing	Description	
SS360NT	High sensitivity latching digital Hall-effect sensor IC, North pole activated, SOT-23 package, pocket tape and reel packaging, 3000 units/reel	
SS360ST	High sensitivity latching digital Hall-effect sensor IC, South pole activated, SOT-23 package, pocket tape and reel packaging, 3000 units/reel	
SS360ST-10K	High sensitivity latching digital Hall-effect sensor IC, South pole activated, SOT-23 package, pocket tape and reel packaging, 10,000 units/reel	
SS460S	High sensitivity latching digital Hall-effect sensor IC, South pole activated, flat TO-92-style package, straight standard leads, bulk packaging, 1000 units/bag	
SS460S-T2	High sensitivity latching digital Hall-effect sensor IC, South pole activated, flat TO-92-style package, formed leads, ammopack tape-in-box packaging, 5000 units/box	
SS460S-T3	High sensitivity latching digital Hall-effect sensor IC, South pole activated, flat TO-92-style package, straight standard leads, ammopack tape-in-box packaging, 5000 units/box	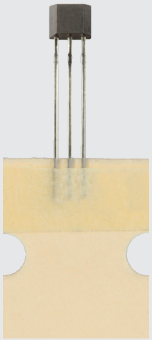
SS460S-LP	High sensitivity latching digital Hall-effect sensor IC, South pole activated, flat TO-92-style package, straight long leads, pocket tape and reel packaging, 3000 units/reel	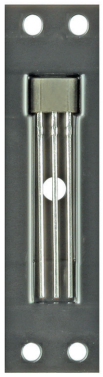

ADDITIONAL INFORMATION

The following associated literature is available on the Honeywell web site at sensing.honeywell.com:

- Product line guide
- Product range guide
- Product installation instructions
- Application sheet:
  - Magnetic Position Sensing in Brushless DC Electric Motors
- Technical notes:
  - Achieving High Sensitivity and Magnetic Stability without the Use of Chopper Stabilization in Bipolar Latching Hall-Effect Sensors for Brushless DC Motor Applications
  - How to Select Hall-Effect Sensors for Brushless DC Motors

⚠ WARNING

PERSONAL INJURY

DO NOT USE these products as safety or emergency stop devices or in any other application where failure of the product could result in personal injury.

Failure to comply with these instructions could result in death or serious injury.

⚠ WARNING

MISUSE OF DOCUMENTATION

- The information presented in this datasheet is for reference only. Do not use this document as a product installation guide.
- Complete installation, operation, and maintenance information is provided in the instructions supplied with each product.

Failure to comply with these instructions could result in death or serious injury.

Warranty/Remedy

Honeywell warrants goods of its manufacture as being free of defective materials and faulty workmanship. Honeywell's standard product warranty applies unless agreed to otherwise by Honeywell in writing; please refer to your order acknowledgement or consult your local sales office for specific warranty details. If warranted goods are returned to Honeywell during the period of coverage, Honeywell will repair or replace, at its option, without charge those items it finds defective. **The foregoing is buyer's sole remedy and is in lieu of all other warranties, expressed or implied, including those of merchantability and fitness for a particular purpose. In no event shall Honeywell be liable for consequential, special, or indirect damages.**

While we provide application assistance personally, through our literature and the Honeywell web site, it is up to the customer to determine the suitability of the product in the application.

Specifications may change without notice. The information we supply is believed to be accurate and reliable as of this printing. However, we assume no responsibility for its use.

For more information

Honeywell Sensing and Internet of Things services its customers through a worldwide network of sales offices and distributors. For application assistance, current specifications, pricing or the nearest Authorized Distributor, visit sensing.honeywell.com or call:

Asia Pacific	+65 6355-2828
Europe	+44 (0) 1698 481481
USA/Canada	+1-800-537-6945

Honeywell Sensing and Internet of Things
9680 Old Bailes Road
Fort Mill, SC 29707
www. honeywell.com

32312441-F-EN | F | 04/19
© 2019 Honeywell International Inc. All rights reserved.

Honeywell