Switching Power Supply
Type SPD 120W
DIN rail mounting

- Installation on DIN Rail 7.5 or 15mm
- Short circuit protection
- PFC available
- High efficiency
- Power ready output
- LED indicator for DC power ON
- LED indicator for DC low
- Parallel versions available
- Compact dimensions
- UL, cUL listed and TUV/CE approved

Product Description

The Switching power supplies SPD series are specially designed to be used in all automation application where the installation is on a DIN rail and compact dimensions and performance are a must.

Ordering Key

SP D 24 120 1 BFP

- **Model**
- **Mounting (D= Din rail)**
- **Output voltage**
- **Output power**
- **Input Type**
- **Optional features**

Input type: 1= single phase

Approvals

Optional Features

Description	Code
Plug-in connectors	Bxx
With P.F.C.	xFx
With Parallel function	xxP

Output Performances

MODEL NO.	INPUT VOLTAGE	OUTPUT WATTAGE	OUTPUT VOLTAGE	OUTPUT CURRENT	EFF. (min.)	EFF. (typ.)
Single Output Models						
SPD12	1ø 90~264 VAC	120 WATTS	+12 VDC	10 A	85%	87%
SPD24	1ø 90~264 VAC	120 WATTS	+24 VDC	5 A	87%	94%

Output Data

Line regulation	± 1%
Load regulation	±1%
Minimum load	0A
Turn on time (full resistive load)	
Vl nom, Io nom	1000ms
Vl nom, Io nom 12V model with 3500 µF CAP	1500ms
Vl nom, Io nom 24V models with 7000 µF CAP	1500ms
Transient recovery time	2ms
Ripple and noise	100mVpp
Output voltage accuracy	±1%
Temperature coefficient	±0.03%/°C
Hold up time Vi	20ms
Voltage fall time (I_0nom Vi nom)	150ms max

Voltage fall time (I_0nom Vi nom)	150ms max
Rated continuous loading	
12V Model	10A @ 12VDC/8.2A @ 14.5VDC
24V Model	5A @ 24VDC/4.2A @ 28.5VDC
Reverse voltage	
12V Model	VDC 18
24V Model	VDC 35
Capacitor load	
Vi nom Io nom 12V model	7000µF
Vi nom Io nom 24V model	3500µF
Voltage rise time	
Vi nom Io nom	500ms
Vi nom, Io nom 12V model with 7000µF CAP	500ms
24V model with 3500µF CAP	500ms

Specifications are subject to change without notice. Pictures are just an example. For special features and/or customization, please ask to our sales network. 20/03/14

CARLO GAVAZZI

Input Data

Rated input voltage	115/230 (auto selected)
Voltage range	
AC 115V selected	90 - 132VAC
AC 220V selected	180 - 264VCA
DC	210 - 315VDC
Rated input current	
(Vi:90VAC, Io nom) **Typ.**	0.36A
Max.	0.5A
Inrush current	
Vi= 115VAC	10A

Power dissipation	
12V Model	20W
24V Model	16W
Frequency range	47-63Hz
Leakage current	
Input-Output	0.25mA
Input-FG	3.5mA

Controls and Protections

Overload	110-145%
Input fuse	T2A/600VAC internal[1)]
Output short circuit	Hiccup mode
Power ready output on threshold	≥17.6-19.4VDC
Electrical isolation	500VDC
Contact rating at 60VDC	0.3A

1) Fuse not replaceable by user

Over voltage protection	**VDC**	
	Min.	**Max.**
12V Model	14.5	17.4
24V Model	30	33
Internal surge voltage protection (IEC 61000-4-5)	Varistor	

General Data (@ nominal line, full load, 25°C)

Ambient temperature	-35°C to +71°C
Derating (>61°C to +71°C)	2.5%/C
Ambient humidity	20 - 90% RH
Storage	-40°C to +85°C
Protection degree	IP20
Cooling	Free air convection
Pollution degree	2

MTB (Bellcore issue 6 @ 40°C, GB)	
12V Model	527000 Hours
24V Model	559000 Hours
Case material	Metal
Dimensions LxWxD mm(inch)	124(4.88) x 64.4(2.53) x 118.8(4.68)
Weight	800 g

Norms and Standards

Vibration resistance	meet IEC 60068-2-6 (Mounting by rail: 10-500Hz, 2G, along X, Y, Z each Axis, 60 min for each Axis)
Shock resistance	meet IEC 60068-2-27 (15G,11ms, 3 Axis, 6 faces, 3 times for each face)
UL/cUL	UL508 listed, UL60950-1, Recognized, ISA 12.12.01 (Class 1, Division 2, Groups A, B, C and D)
TUV	EN 60950-1, CB scheme EN 61558-1, EN 61558-2-17 (meet EN 60204)

CCC	GB4943, GB9254, GB17625.1
CE	EN 61000-6-3, EN 55022 Class B, EN 61000-3-2, EN 61000-3-3, EN 61000-6-2, EN 55024, EN 61000-4-2 Level 4, EN 61000-4-3 Level 3, EN 61000-4-4 Level 4, EN 61000-4-5 Level 3, L/N-FG Level 4, EN 61000-4-6 Level 3, EN 61000-4-8 Level 4, EN 61000-4-11, ENV 50204 Level 2, EN 61204-3

Specifications are subject to change without notice. Pictures are just an example. For special features and/or customization, please ask to our sales network. 20/03/2014

Block Diagram

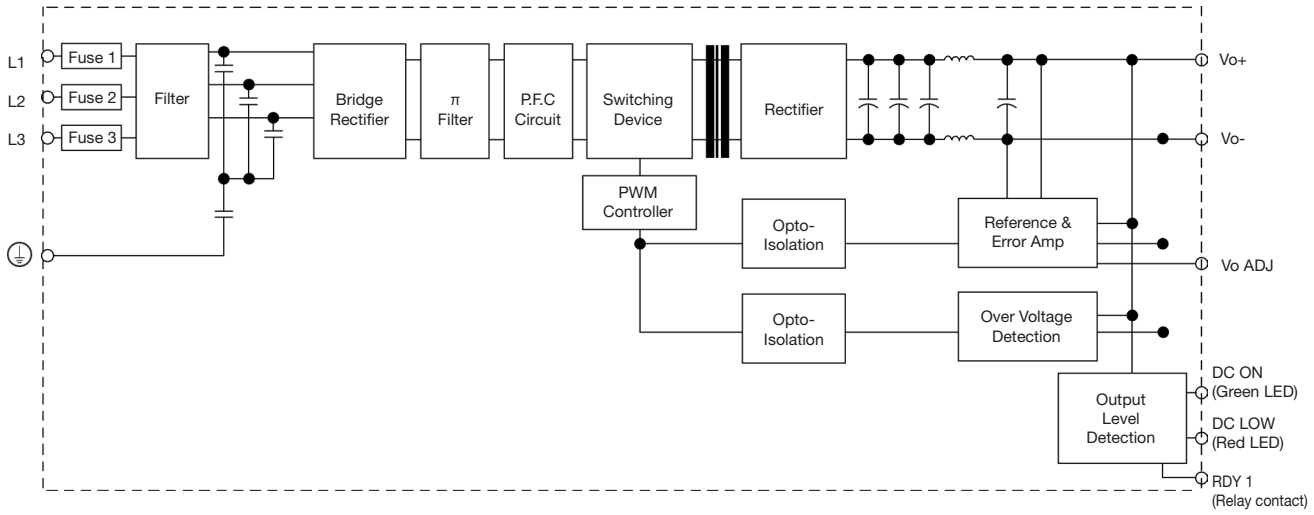

Pin Assignement and Front Controls

Pin No.	Designation	Description
1, 2	V-	Negative output terminal
3, 4	V+	Positive output terminal
5	RDY	A normal open relay contact for DC ON level control
6	RDY	(Never connect except 24V model)
7	⏚	Grounf this terminal to minimize high-frequency emissions
8	L1	Input terminals
9	L2	Input terminals
10	L3	Input terminals
	DC ON	Operation indicator LED
	DC LO	DC LOW voltage indicator LED
	Vout ADJ	Trimmer-potentiometer for Vout adjustment

Derating Diagram

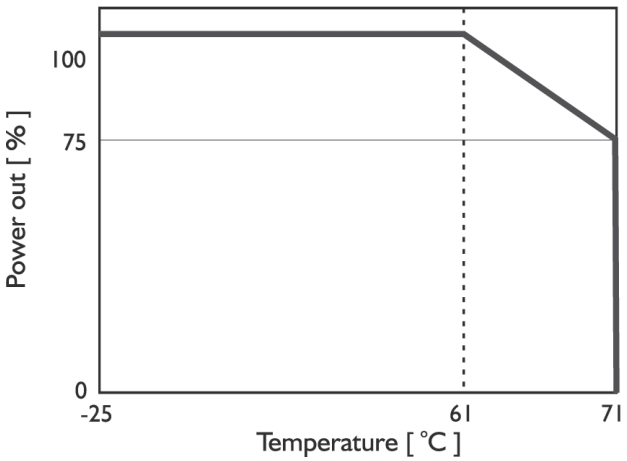

Typ. Efficiency Curve

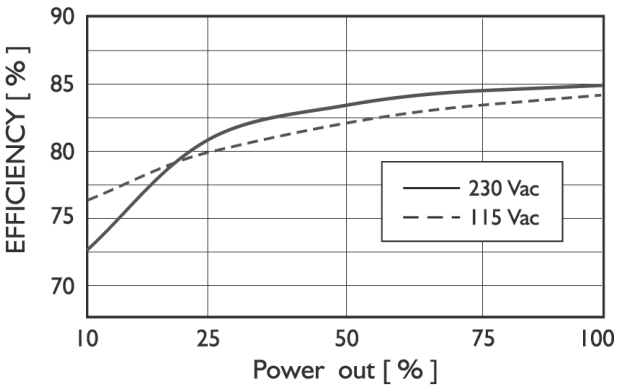

Typ. Current Limited Curve

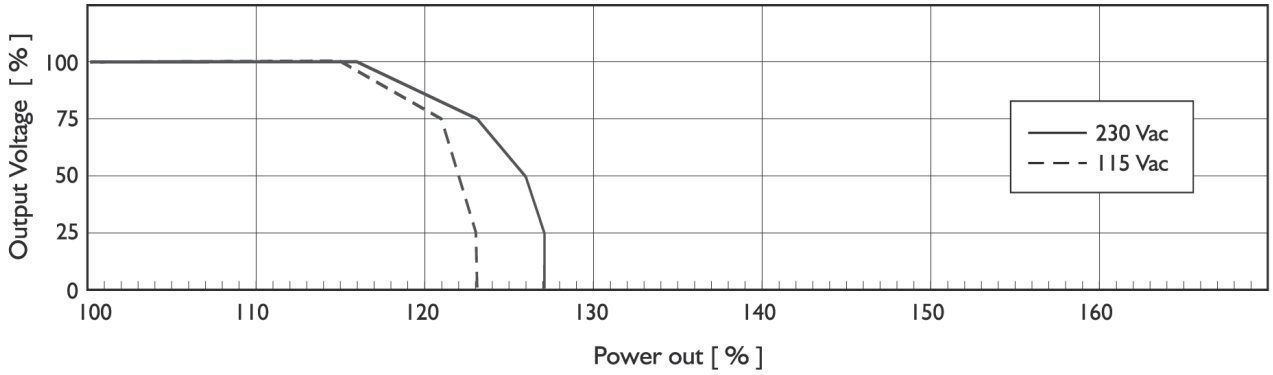

Mechanical Drawings mm (inches)

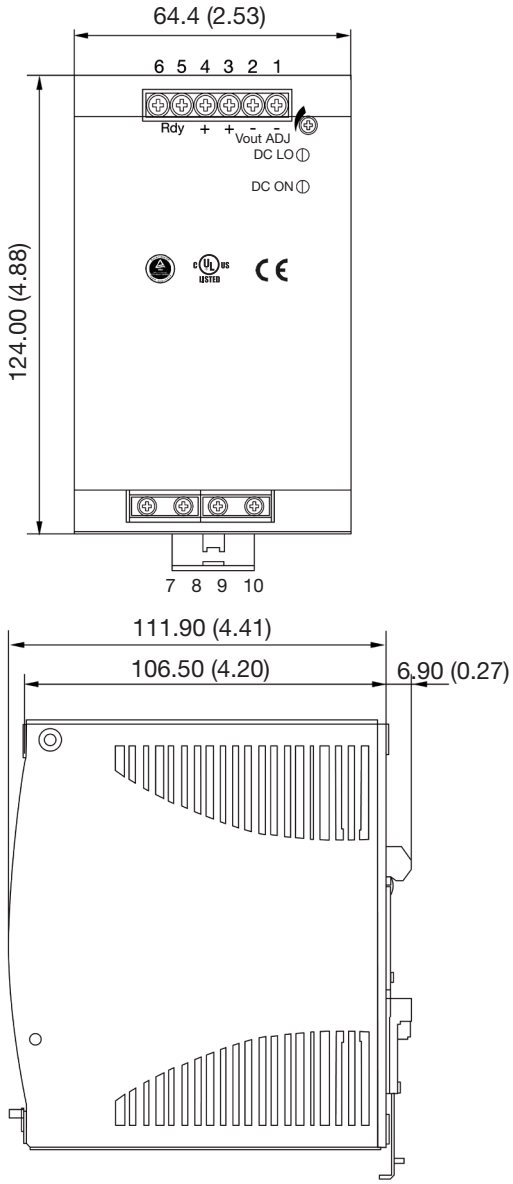

Installation

Ventilation and cooling	Normal convection All sides 25mm free space for cooling is recommended.
Screw terminal	10-24AWG flexible or solid cable 8mm stripping recommend.
Max. torque for terminal	
Input terminal	1.008Nm (9.0lb-in)
Output terminal	0.616Nm (5.5lb-in)
Plug-in terminals	10-24AWG flexible or solid cable 7mm stripping recommend.
Max. torque for plug-in terminals	
Input terminal	0.784Nm (7.0lb-in)
Output terminal	0.784Nm (7.0lb-in)

Specifications are subject to change without notice. Pictures are just an example. For special features and/or customization, please ask to our sales network. 20/03/2014