Resistors

SOT23 Surface Mount Voltage Divider

DIV23 Series

- Replaces legacy SOT23 Series for new designs
- Precision ratio tolerances to ±0.05%
- Superior alternative to matched sets
- Ultra-stable TaNSil® resistors on silicon substrate
- RoHS Compliant and Sn/Pb terminations available

All Pb-free parts comply with EU Directive 2011/65/EU amended by (EU) 2015/863 (RoHS3)

Electrical Data

Element Resistance Range	10 to 200KΩ
Total Resistance Range	20 to 400KΩ
Absolute Tolerance	To ±0.1%
Ratio Tolerance to R1	To ±0.05%
Absolute TCR	To ±25ppm/°C
Tracking TCR	To ±2ppm/°C
Element Power Rating @ 70°C	125mW
Package Power Rating @ 70°C	250mW
Rated Operating Voltage (not to exceed $\sqrt{P \times R}$)	100 Volts
Operating Temperature	-55°C to +125°C
Noise	<-30dB

Environmental Data

Test Per MIL-PRF-83401	Typical Delta R	Max Delta R
Thermal Shock	±0.02%	±0.1%
Power Conditioning	±0.03%	±0.1%
High Temperature Exposure	±0.03%	±0.05%
Short-time Overload	±0.02%	±0.05%
Low Temperature Storage	±0.03%	±0.05%
Life	±0.05%	±0.1%

Manufacturing Capability

Element Resistance	Available Absolute Tolerances	Available Ratio Tolerances	Best Absolute TCR	Tracking TCR
10Ω - 25Ω	F G J K	D F G	±100ppm/°C	±25ppm/°C
25.1Ω - 50Ω	D F G J K	C D F G	±50ppm/°C	±10ppm/°C
51Ω - 500Ω	C D F G J K	B C D F G	±25ppm/°C	±2ppm/°C
501Ω - 100KΩ	B C D F G J K	A B C D F G	±25ppm/°C	±2ppm/°C
101KΩ - 200KΩ	B C D F G J K	B C D F G	±25ppm/°C	±2ppm/°C

General Note

TT Electronics reserves the right to make changes in product specification without notice or liability.
All information is subject to TT Electronics' own data and is considered accurate at time of going to print.

BI Technologies IRC Welwyn

www.ttelectronics.com/resistors

© TT Electronics plc

Physical Data

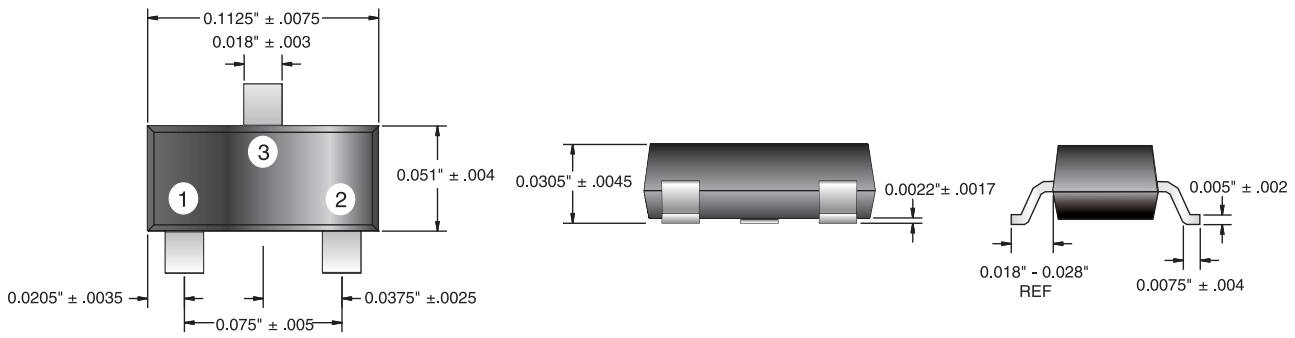

Note: Dimensions do not include mold flash and metal burr.

Schematic Data

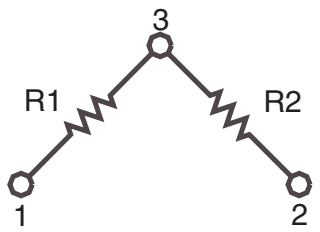

Viewed from top of part

Power Derating Data

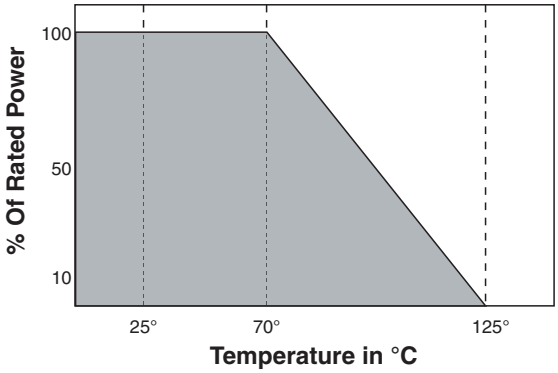

Marking

The product is marked with four characters which are an internal reference only, and which may vary within and between batches.

General Note

TT Electronics reserves the right to make changes in product specification without notice or liability.
All information is subject to TT Electronics' own data and is considered accurate at time of going to print.

© TT Electronics plc

Ordering Procedure

This product has two valid part numbers:

European (Welwyn) Part Number: D23-1K0-3K3FB (25ppm/°C, R1=1 kilohm, R2=3.3 kilohms, absolute tolerance ±1%, ratio tolerance ±0.1%, Pb-free)

D	2	3			-	1	K	0	-	3	K	3	F	B		
1			2			3				4			5	6	7	

1 Type	2 Absolute TCR	3 Value R1	4 Value R2	5 Absolute Tolerance	6 Ratio Tolerance	7 Termination & Packing
D23 = DIV23	Omit for ±25ppm/°C	E24 = 3/4 characters E96 = 3/4 characters R = ohms K = kilohms		B = ±0.1%	A = ±0.05%	Omit for Pb-free, Standard pack
	02 = ±50ppm/°C			C = ±0.25%	B = ±0.1%	
	01 = ±100ppm/°C			D = ±0.5%	C = ±0.25%	PB = SnPb finish, Standard pack
	00 = ±250ppm/°C			F = ±1%	D = ±0.5%	
				G = ±2%	F = ±1%	1000/reel
				J = ±5%	G = ±2%	
				K = ±10%		

Note that this is equivalent to the legacy part number **SOT23-3K3-1K0FB** in which positions of R1 and R2 were transposed.

USA (IRC) Part Number: SOT-DIV23LF-03-1001-3301-FB (25ppm/°C, R1=1 kilohm, R2=3.3 kilohms, absolute tolerance ±1%, ratio tolerance ±0.1%, Pb-free)

S	O	T	-	D	I	V	2	3	L	F	-	0	3	-	1	0	0	1	-	3	3	0	1	-	F	B
1				2					3			4			5					6					7	8

1 Family	2 Model	3 Termination	4 Absolute TCR	5 Value R1	6 Value R2	7 Absolute Tolerance	8 Ratio Tolerance	Packing
SOT	DIV23	Omit for SnPb (60/40)	03 = ±25ppm/°C	3 digits + multiplier		B = ±0.1%	A = ±0.05%	1000/reel
			02 = ±50ppm/°C	R = ohms for values <100 ohms		C = ±0.25%	B = ±0.1%	
		LF = Pb-free (100%Sn)	01 = ±100ppm/°C			D = ±0.5%	C = ±0.25%	
			00 = ±250ppm/°C			F = ±1%	D = ±0.5%	
						G = ±2%	F = ±1%	
						J = ±5%	G = ±2%	
						K = ±10%		

Note that this is equivalent to the legacy part number **SOT-SOT23LF-03-3301-1001-FB** in which positions of R1 and R2 were transposed.

General Note
TT Electronics reserves the right to make changes in product specification without notice or liability.
All information is subject to TT Electronics' own data and is considered accurate at time of going to print.

© TT Electronics plc