SHP1000 Series

XP Power

1kW FAN COOLED

AC-DC POWER SUPPLIES

The SHP1000 AC-DC power supply provides up to 1200W of output power in a compact rugged mechanical package, suitable for a range of applications.

The unit comprises of a main output with voltages from 12-48VDC and a 5VDC standby supply which can be utilised with the signals and control features of the unit to provide detection of loss of AC input and remote on/off control.

Multiple units can be used in parallel via the current share facility, providing higher power solutions. Inherently low earth leakage current, and conducted EMC compliance to Class B also simplify higher power system design.

Applications

- Analytical Instrumentation
- Industrial Electronics
- Laboratory
- Semi-fab

Dimensions

9.5” x 5.9” x 2.4” (241 x 150 x 61 mm)

Features

- Output voltages 12 to 48VDC
- Rugged industrial construction
- End fan, top fan and U channel mechanical options
- IEC62368 and SEMI F47 compliant
- Operating temperature range from -40°C to +70°C
- Peripheral 12VDC fan supply and 5V standby
- AC OK, remote On/Off and active current share
- Load dependent variable fan speed
- Overcurrent, overvoltage and overtemperature protection
- 3 year warranty

Models & Ratings

Model Number	Output Voltage V1	Output Current V1		Standby Supply V3	Output Power	
		<180VAC	>180VAC		<180VAC	>180VAC
SHP1000PS12	12V	83.0A		5V/1.0A	1000W	
SHP1000PS15	15V	67.0A		5V/1.0A	1010W	
SHP1000PS24	24V	42.0A	50.0A	5V/1.0A	1013W	1200W
SHP1000PS28	28V	36.0A	43.0A	5V/1.0A	1013W	1200W
SHP1000PS36	36V	28.0A	34.0A	5V/1.0A	1013W	1200W
SHP1000PS48	48V	21.0A	25.0A	5V/1.0A	1013W	1200W

Summary

Characteristic	Minimum	Typical	Maximum	Units	Notes & Conditions
Input Voltage	85	115/230	264	VAC	Derate output power 10% <90VAC, see Fig. 1
Efficiency		85		%	See Models & Ratings
Operating Temperature	-40		+70	°C	Derate linearly from 100% load at 50°C to 50% load at 70°C
EMC	EN55032 Level B Conducted & Level A Radiated				
Safety Approvals	UL62368-1, CAN/CSA C22.2 No 62368-1-14, EN62368-1, IEC62368-1:2014, IEC60950, CE (Meets all applicable directives), UKCA (Meets all applicable legislation)				
Weight		4.6 (2.08)		lb (kg)	

Input

Characteristic	Minimum	Typical	Maximum	Units	Notes & Conditions
Input Voltage	85	115/230	264	VAC	Derate output power 10% <90VAC, see Fig. 1
Input Frequency	47	50/60	63	Hz	Agency approval, 47-63 Hz
Power Factor	0.9				
Input Current - No Load		0.35/0.5		A	115/230VAC
Input Current - Full Load		10.9/5.1		A	115/230VAC
Inrush Current			60	A	264VAC cold start, 25°C
Earth Leakage Current		0.3/0.5	0.75	mA	115/230 VAC/50 Hz (Typ.), 264 VAC/60 Hz (Max.)
Input Protection	T20 A / 250 V internal fuse in both lines				

Input Derating Curve

Figure 1

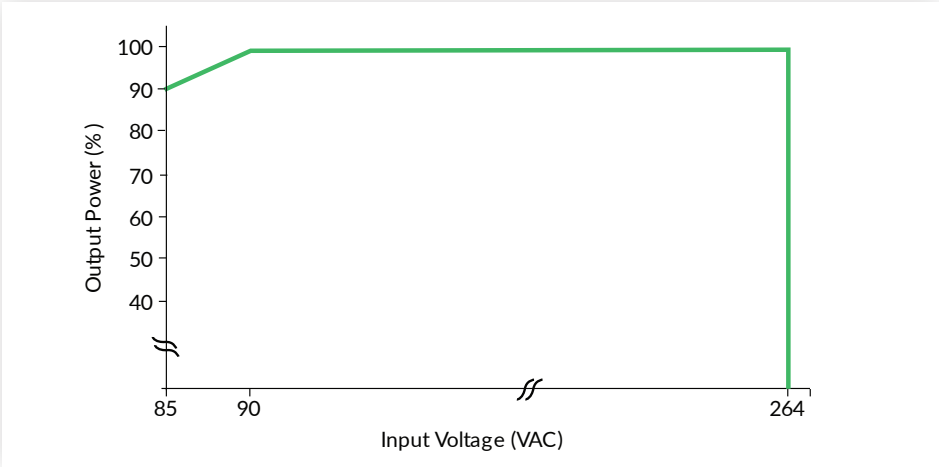

Output

Characteristic	Minimum	Typical	Maximum	Units	Notes & Conditions
Output Voltage - V1	12		48	VDC	See Models & Ratings table
Initial Set Accuracy		±1		%	V1, 50% load, 115/230VAC
		±5		%	V3, 50% load, 115/230VAC
Output Voltage Adjustment			±10	%	V1 only. See Mechanical Details
Minimum Load	No minimum load required				
Start Up Delay		0.5		s	230VAC full load
Hold Up Time	20			ms	
Drift			±0.2	%	After 20 min warm up
Line Regulation			±0.5	%	
Load Regulation			±1	%	V1, 0-100% load
			±5	%	V3, 0-100% load
Transient Response			4	%	V1, recovery within 1% in less than 500µs for a 50-75% and 75-50% load step
Ripple & Noise			1	% pk-pk	V1, 20MHz bandwidth
Overvoltage Protection	115		145	%	Vnom DC. Output 1 only, recycle input to reset
Overtemperature Protection	Auto reset				
Overload Protection	110		140	% I nom	Output 1 only, auto reset. See fig 2.
Short Circuit Protection	Protects unit from overtemperature. Auto recovery, hiccup mode				
Temperature Coefficient			0.05	%/°C	

Output Overload Characteristic

Figure 2
Typical V1 Overload Characteristic
(SHP1000PS12 shown)

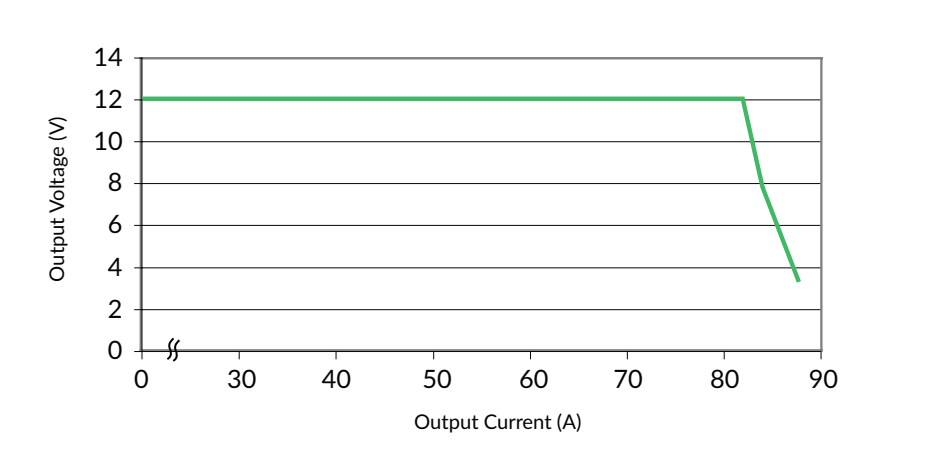

General

Characteristic	Minimum	Typical	Maximum	Units	Notes & Conditions
Efficiency		85		%	See Fig. 3 & 4
Isolation: Input to Output	3000			VAC	
Input to Ground	1500			VAC	
Output to Ground	500			VDC	
Switching Frequency		70		kHz	PFC converter
		200			Main converter
		130			Standby
Power Density			8.9	W/in³	
Mean Time Between Failure	216		275	khrs	MIL-HDBK-217F, 25°C GB
Weight			4.6 (2.08)	lb (kg)	See Mechanical Details

Efficiency Graphs

Efficiency vs Load

Figure 3
SHP1000PS12

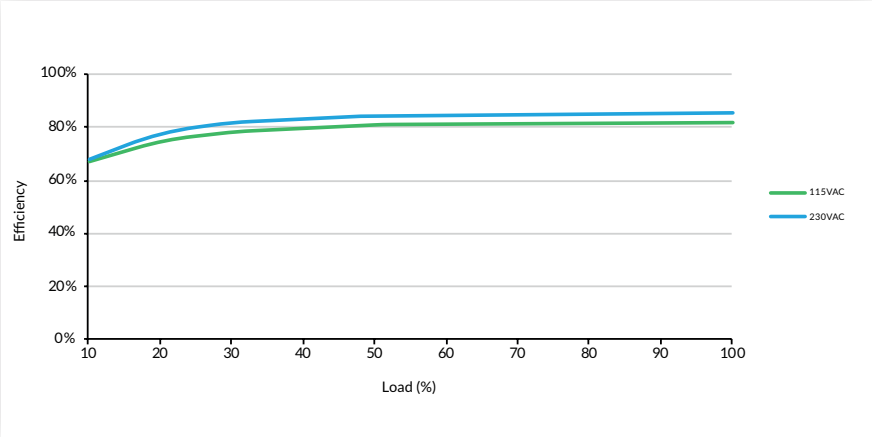

Figure 4
SHP1000PS48

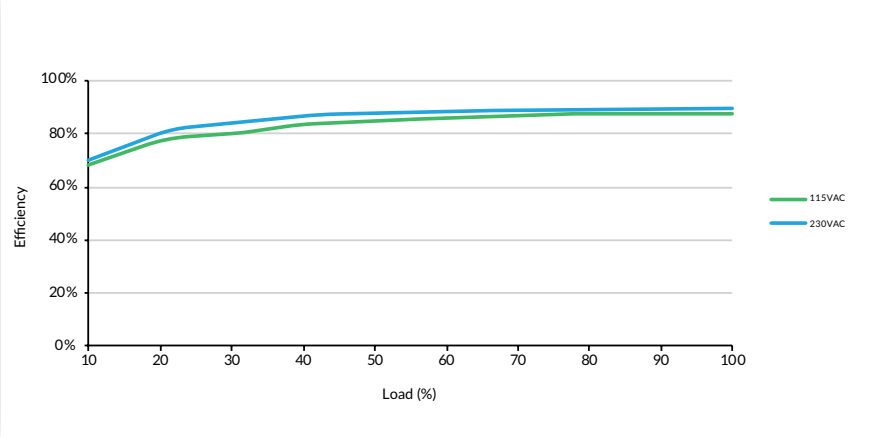

Signals & Controls

	Function
Remote Sense	Compensates for 0.5V total voltage drop
AC OK/Power Fail	Open collector referenced to negative sense, transistor normally off when AC is good (see fig. 5 & 8) AC OK: Provides ≥5ms warning of loss of output from AC failure
Remote On/Off (Inhibit/Enable)	Uncommitted isolated optocoupler diode, powered diode inhibits both V1 & V2 (fan supply) (see fig.6 & 9)
Current Share	When more than one unit (with the same output voltage) is used in parallel to increase output current, the current share pins 5/6 of one unit should be connected to pins 5/6 of the other unit(s). This will force the current to share between the outputs. Similarly pins 2/4 of each unit should also be connected as a ground reference. Units share current within 10% of each other at full load. See fig 7
Standby Supply V3	Isolated 5V/1.0A supply, always present when AC supplied

AC OK/Power Fail

Figure 5

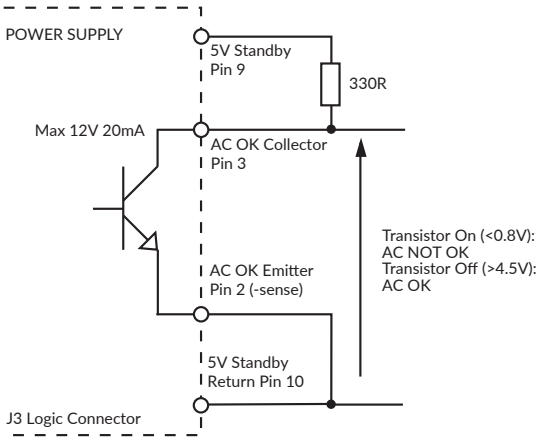

Remote On/Off (Inhibit)

Figure 6

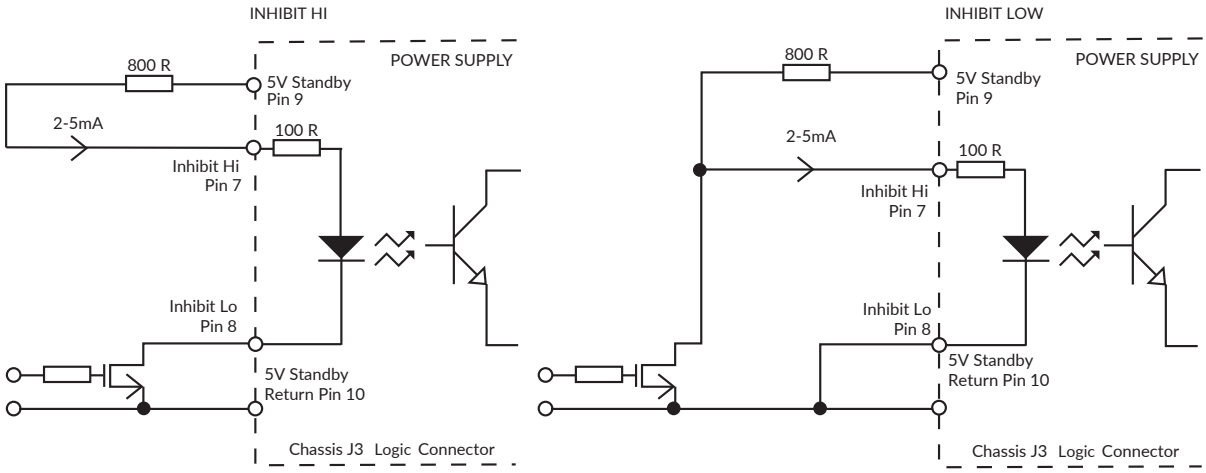

Signal High: Power Supply OFF
Low or Floating: Power Supply ON

Signal High: Power Supply ON
Low or Floating: Power Supply OFF

Signals & Controls

Parallel Load & Current Share Connection Example

Figure 7

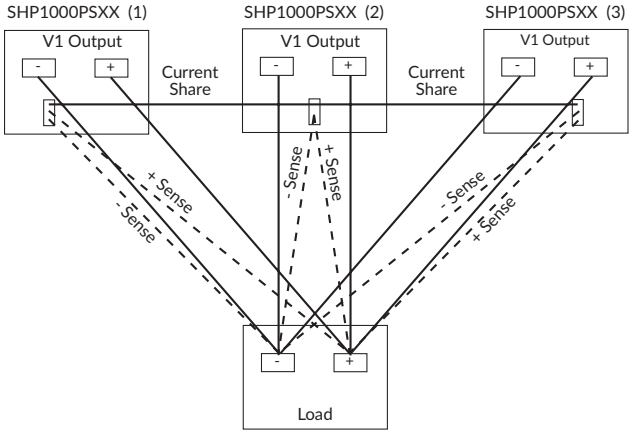

Parallel AC OK Connection

Figure 8

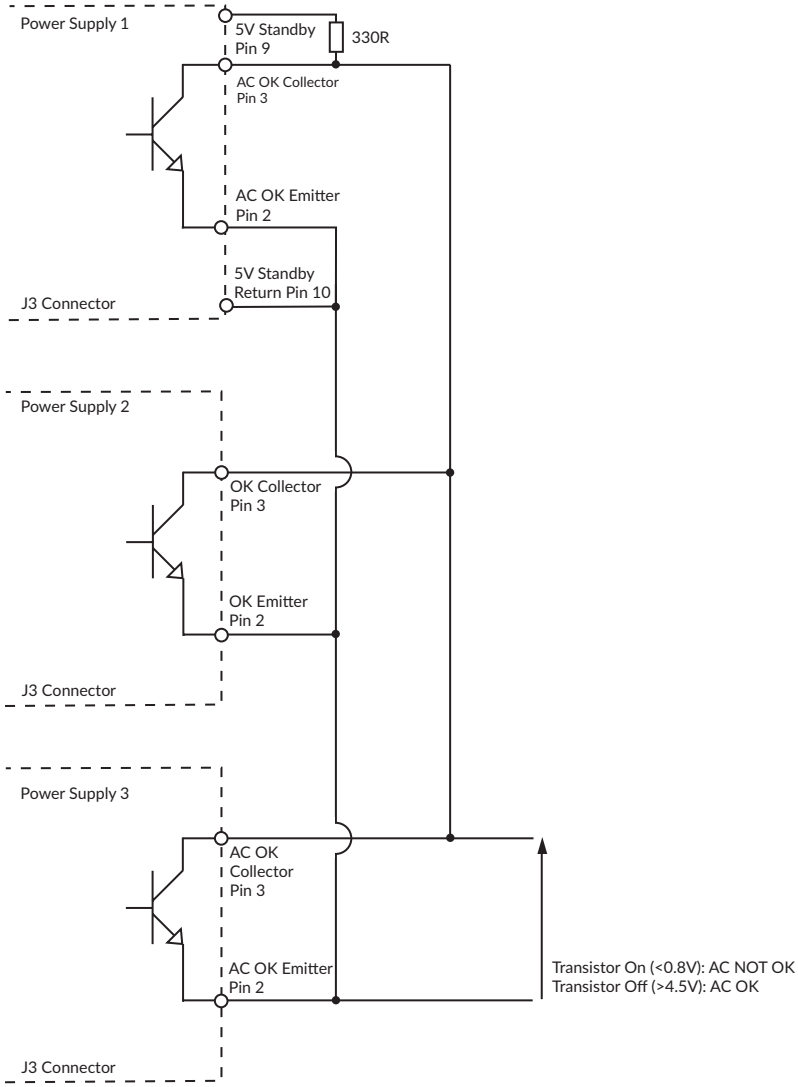

Signals & Controls

Parallel Remote Inhibit Connection
Figure 9

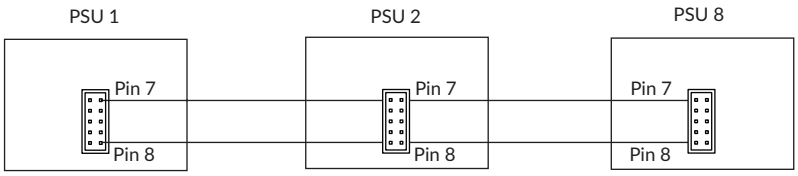

Open or TTL high = PSU On
Short circuit or TTL Low = PSU Off

Environmental

Characteristic	Minimum	Typical	Maximum	Units	Notes & Conditions
Operating Temperature	-40		+70	°C	See derating curve, fig. 10
Storage Temperature	-40		+85	°C	
Cooling	2 x integral variable speed fans load dependant. See fig 11				
Operating Humidity	5		95	%RH	Non-condensing
Operating Altitude			3000	m	
Shock	3 x 30g/11ms shocks in both +ve & -ve directions along the 3 orthogonal axis, total 18 shocks				
Vibration	Single axis 10-500 Hz at 2g x 10 sweeps				

Temperature Derating Curve
Figure 10

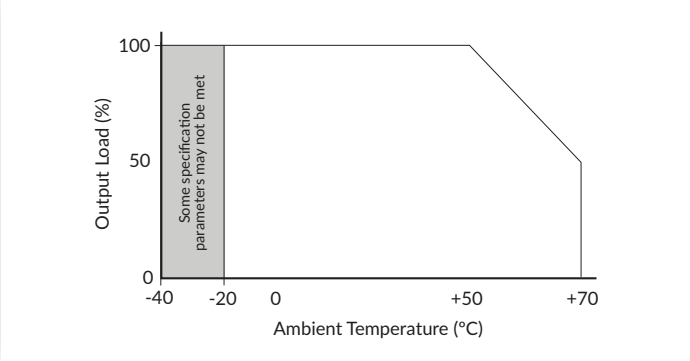

Fan Speed Control
Figure 11

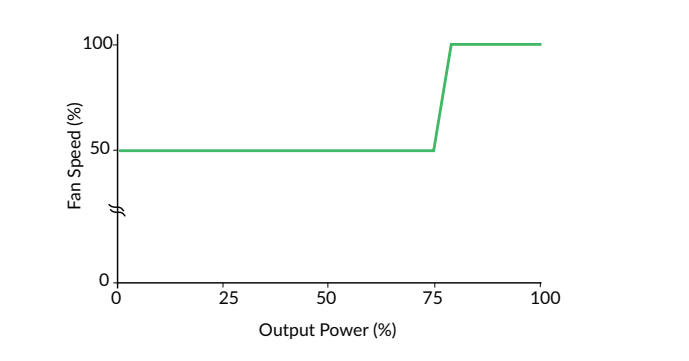

EMC: Emissions

Phenomenon	Standard	Test Level	Notes & Conditions
Conducted	EN55032	Class B	
Radiated	EN55032	Class A	
Voltage Fluctuations	EN61000-3-3		

EMC: Immunity

Phenomenon	Standard	Test Level	Criteria	Notes & Conditions
Low Voltage PSU EMC	EN61204-3	High severity level	as below	
Harmonic Current	EN61000-3-2	Class A		
		Class C		For loads ≥10%
ESD	EN61000-4-2	3	A	
Radiated	EN61000-4-3	3	A	
EFT/Burst	EN61000-4-4	3	A	
Surge	EN61000-4-5	Installation class 3	A	
Conducted	EN61000-4-6	3	A	
Dips and Interruptions	EN61000-4-11	Dip 20% 5000ms	A	
		Dip 30% 500ms	A	
		Dip 60% 200ms	B	
		Dip 100% 5000ms	B	
	SEMI F47			Compliant

Safety Approvals

Certification	Standard	Notes & Conditions
CB	IEC60950-1:2005 Ed 2 / IEC62368-1:2014	Information Technology
UL	UL 62368-1 & CAN/CSA C22.2 No. 62368-1-14	Information Technology
TUV	EN62368-1:2014/A11:2017	Information Technology
CE	Meets all applicable directives	
UKCA	Meets all applicable legislation	
Equipment Protection Class	**Standard**	**Notes & Conditions**
Class I	IEC60950-1:2005 Ed 2 / IEC62368-1:2014	See safety agency conditions of acceptability for details

Mechanical Details

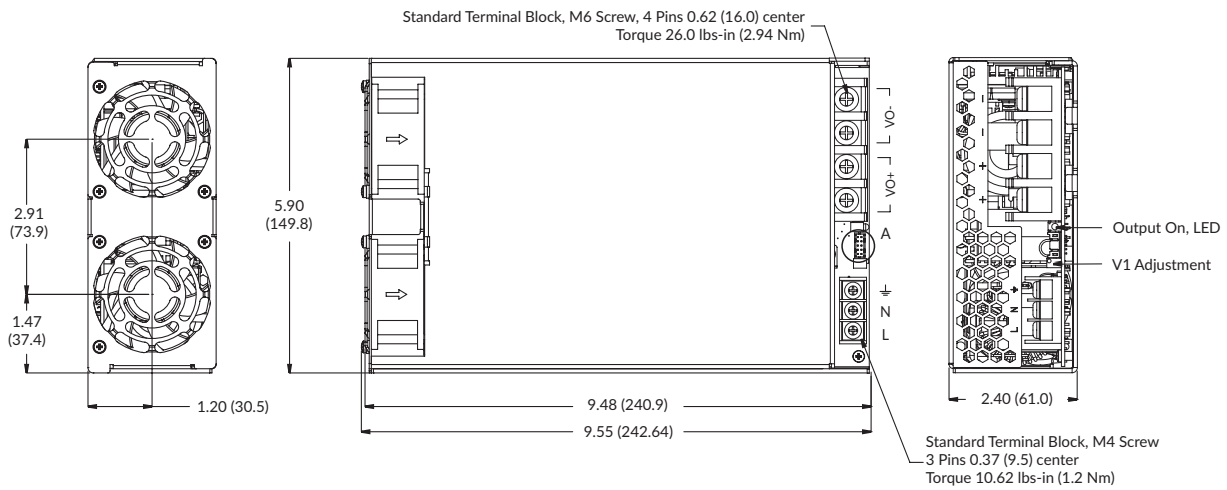

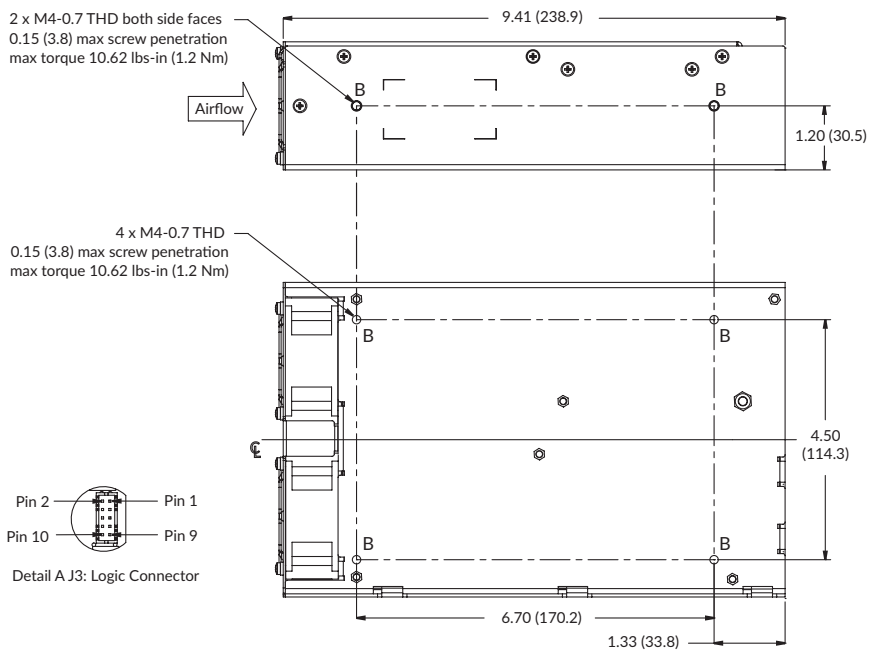

Detail A J3: Logic Connector

J3 Logic Connector (JST B10B-PHDSS)	
Pin	**Description**
1	+ Sense
2	- Sense
3	AC OK/Power Fail
4	- Sense
5	Current Share
6	Current Share
7	+ Inhibit
8	- Inhibit
9	+5V Standby
10	-5V Standby

Notes:

1. Dimensions shown in inches (mm).
2. Weight: 4.6lb (2.08kg).
3. J3 Mating plug: JST part no. PHDR-10VS, contact: 26-22 AWG JST part no. SPHD-001T-P0.5.