OSRAM SFH 4544

Datasheet

Published by ams-OSRAM AG
Tobelbader Strasse 30, 8141 Premstaetten, Austria
Phone +43 3136 500-0
ams-osram.com
© All rights reserved

Radial T1 3/4

SFH 4544

Infrared Emitter (940 nm)

Applications

- Access Control & Security
- Appliances & Tools
- Home & Building Automation

Features

- Package: black epoxy
- ESD: 2 kV acc. to ANSI/ESDA/JEDEC JS-001 (HBM, Class 2)
- Wavelength 950nm
- Narrow half angle (± 10°)
- Short switching times
- UL version available (ordering code & test conditions on request)

Ordering Information

Type	Radiant intensity [1)2)] I_F = 100 mA; t_p = 20 ms I_e	Radiant intensity [1)] typ. I_F = 100 mA; t_p = 20 ms I_e	Ordering Code
SFH 4544	280 ... 1120 mW/sr	550 mW/sr	Q65111A4886

Maximum Ratings

T_A = 25 °C

Parameter	Symbol		Values
Operating temperature	T_{op}	min. max.	-40 °C 100 °C
Storage temperature	T_{stg}	min. max.	-40 °C 100 °C
Junction temperature	T_j	max.	100 °C
Forward current	I_F	max.	100 mA
Forward current pulsed t_p ≤ 200 µs; D ≤ 0.005	$I_{F\ pulse}$	max.	1 A
Reverse voltage [3)]	V_R	max.	5 V
Power consumption	P_{tot}	max.	200 mW
ESD withstand voltage acc. to ANSI/ESDA/JEDEC JS-001 (HBM, Class 2)	V_{ESD}	max.	2 kV

Characteristics

I_F = 100 mA; t_p = 20 ms; T_A = 25 °C

Parameter	Symbol		Values
Peak wavelength	λ_{peak}	typ.	950 nm
Centroid wavelength	$\lambda_{centroid}$	typ.	940 nm
Spectral bandwidth at 50% $I_{rel,max}$ (FWHM)	$\Delta\lambda$	typ.	42 nm
Half angle	φ	typ.	10 °
Dimensions of active chip area	L x W	typ.	0.3 x 0.3 mm x mm
Rise time (10% / 90%) I_F = 100 mA; R_L = 50 Ω	t_r	typ.	12 ns
Fall time (10% / 90%) I_F = 100 mA; R_L = 50 Ω	t_f	typ.	12 ns
Forward voltage [4]	V_F	typ. max.	1.6 V 1.8 V
Forward voltage [4] I_F = 1 A; t_p = 100 µs	V_F	typ. max.	3.6 V 4.5 V
Reverse current [3] V_R = 5 V	I_R	typ. max.	0.01 µA 10 µA
Radiant intensity [1] I_F = 1 A; t_p = 100 µs	I_e	typ.	2300 mW/sr
Total radiant flux [5] I_F = 100 mA; t_p = 20 ms	Φ_e	typ.	75 mW
Temperature coefficient of voltage	TC_V	typ.	-0.8 mV / K
Temperature coefficient of brightness	TC_I	typ.	-0.3 % / K
Temperature coefficient of wavelength	TC_λ	typ.	0.3 nm / K
Thermal resistance junction solder point real [6]	$R_{thJS\ real}$	max.	240 K / W
Thermal resistance junction ambient real [7]	R_{thJA}	max.	430 K / W

Brightness Groups

T_A = 25 °C

Group	Radiant intensity [1)2)] I_F = 100 mA; t_p = 20 ms min. I_e	Radiant intensity [1)2)] I_F = 100 mA; t_p = 20 ms max. I_e
CW	280 mW/sr	450 mW/sr
DW	450 mW/sr	710 mW/sr
EW	710 mW/sr	1120 mW/sr

Only one group in one packing unit.

Relative Spectral Emission [8], [9]

$I_{e,rel} = f(\lambda)$; $I_F = 100$ mA; $t_p = 20$ ms

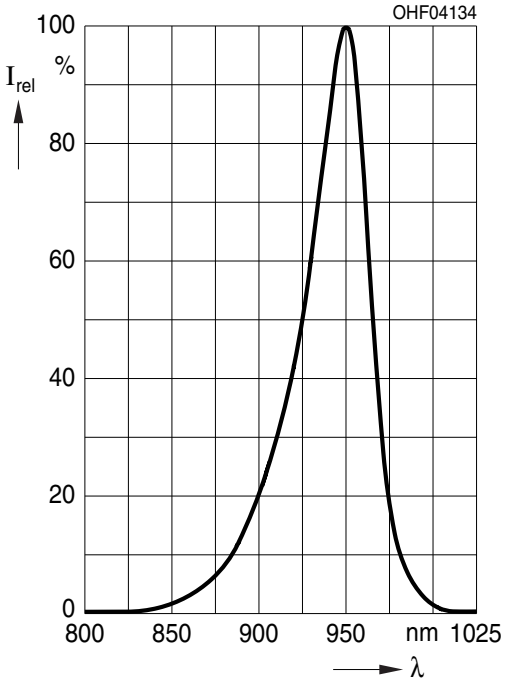

Radiation Characteristics [8], [9]

$I_{e,rel} = f(\varphi)$

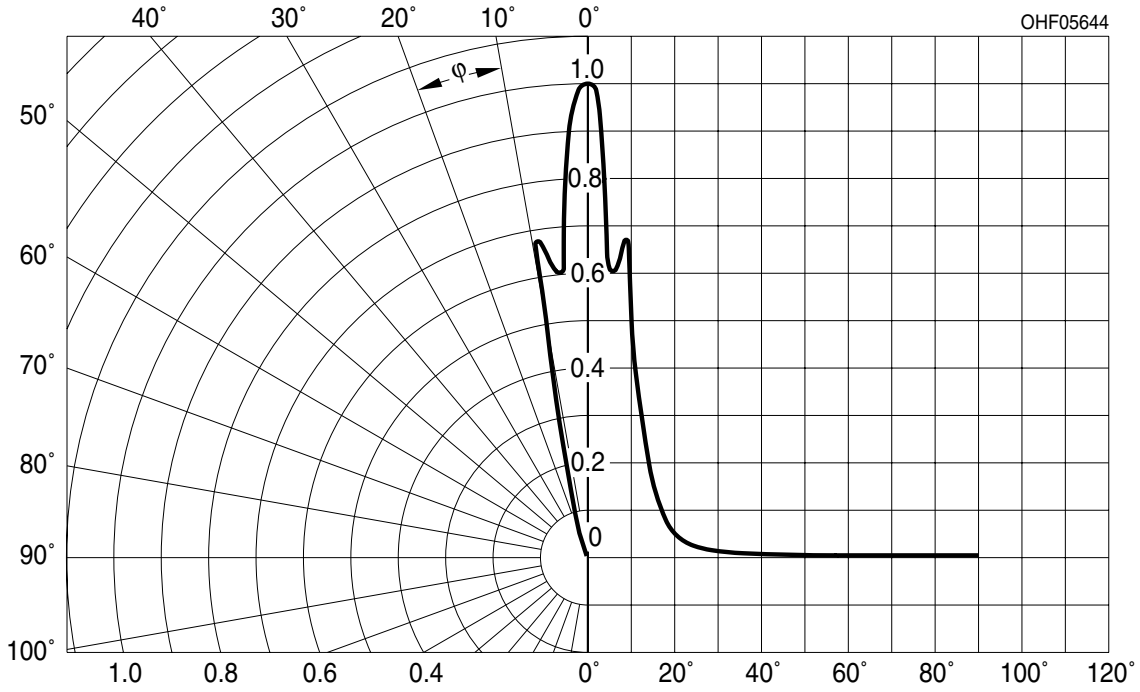

Forward current [8], [9]

$I_F = f(V_F)$; single pulse; t_p = 100 µs

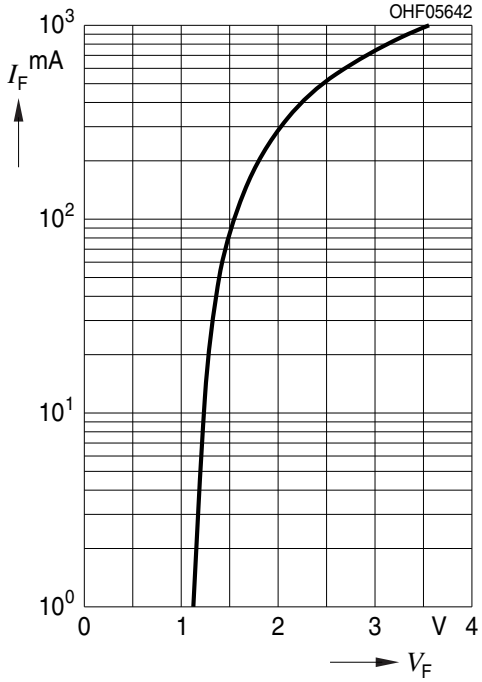

Radiant Intensity [8], [9]

$I_e/I_e(100mA) = f(I_F)$; single pulse; t_p = 100 µs

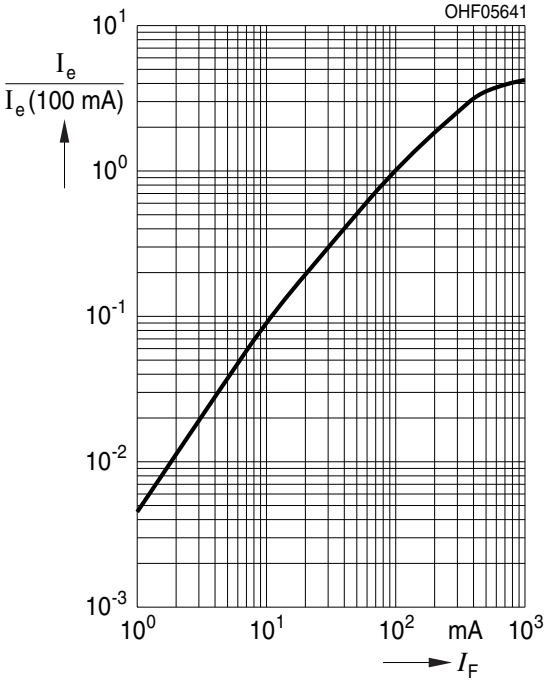

Max. Permissible Forward Current

$I_F = f(T_A)$; Rth_{ja} = 430 K / W

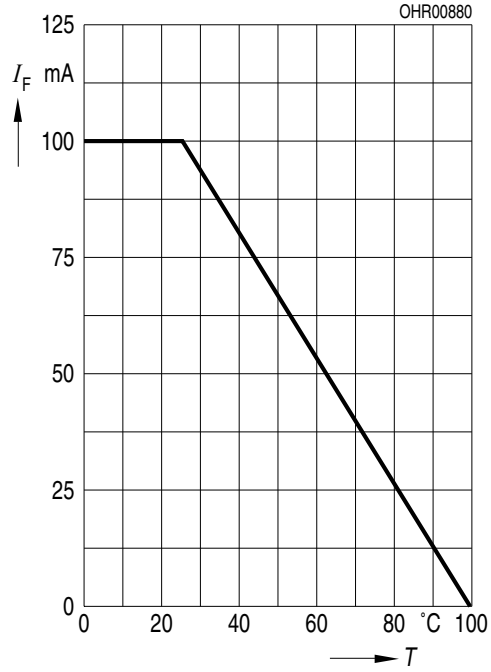

Permissible Pulse Handling Capability

$I_F = f(t_p)$; duty cycle D = parameter; T_A = 25°C

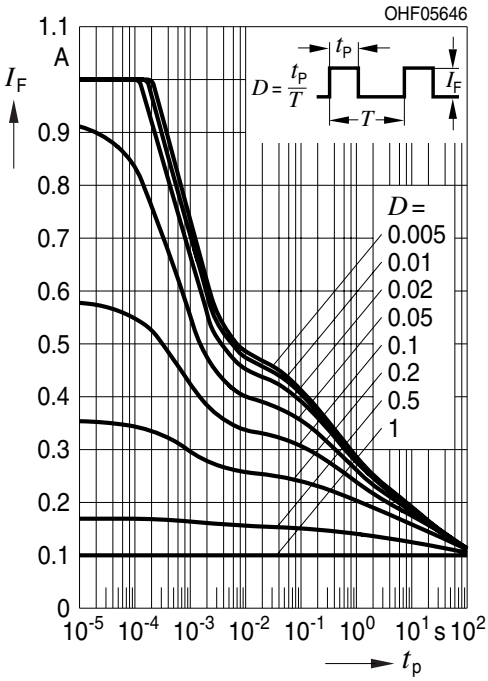

Permissible Pulse Handling Capability

$I_F = f(t_p)$; duty cycle D = parameter; T_A = 85°C

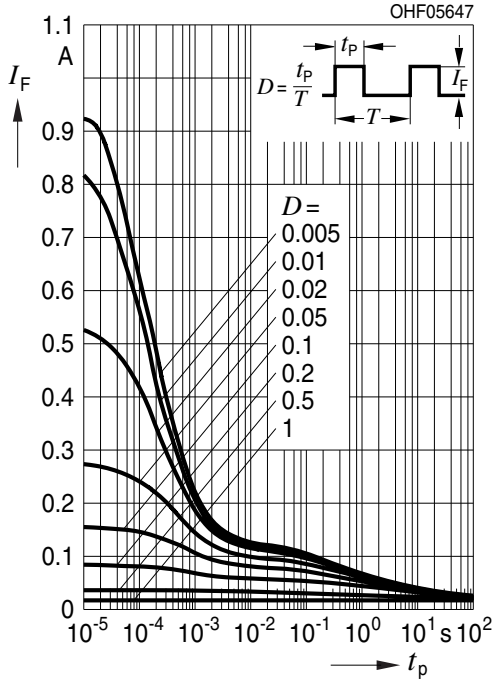

Dimensional Drawing [10)]

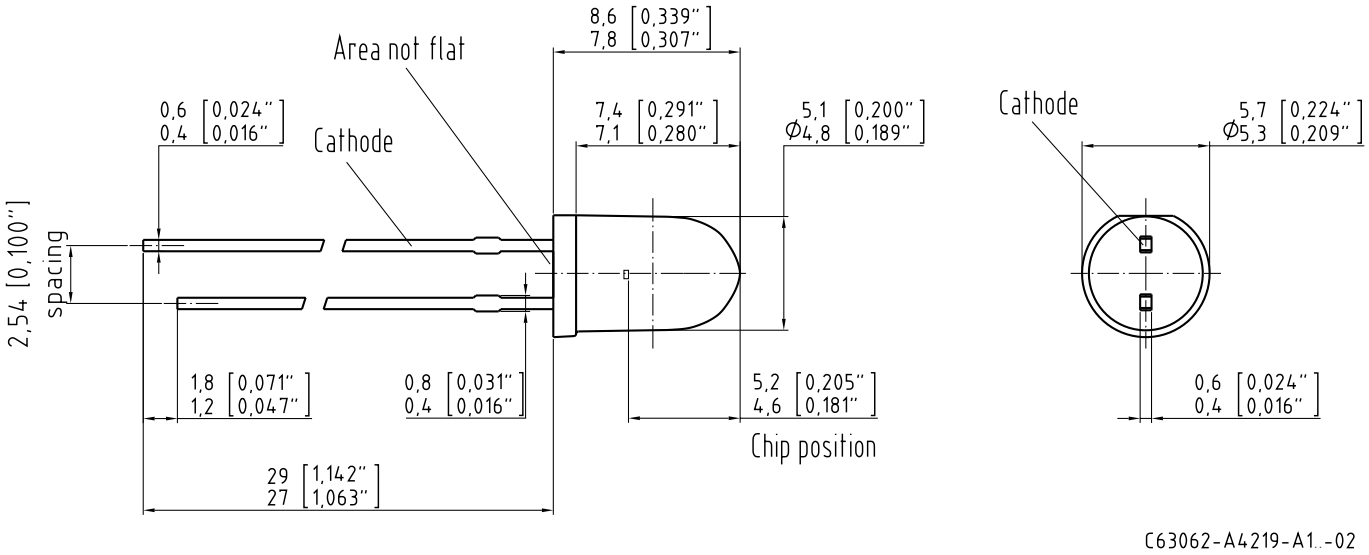

Further Information:

Approximate Weight: 300.0 mg

Package marking: Cathode

Recommended Solder Pad [10)]

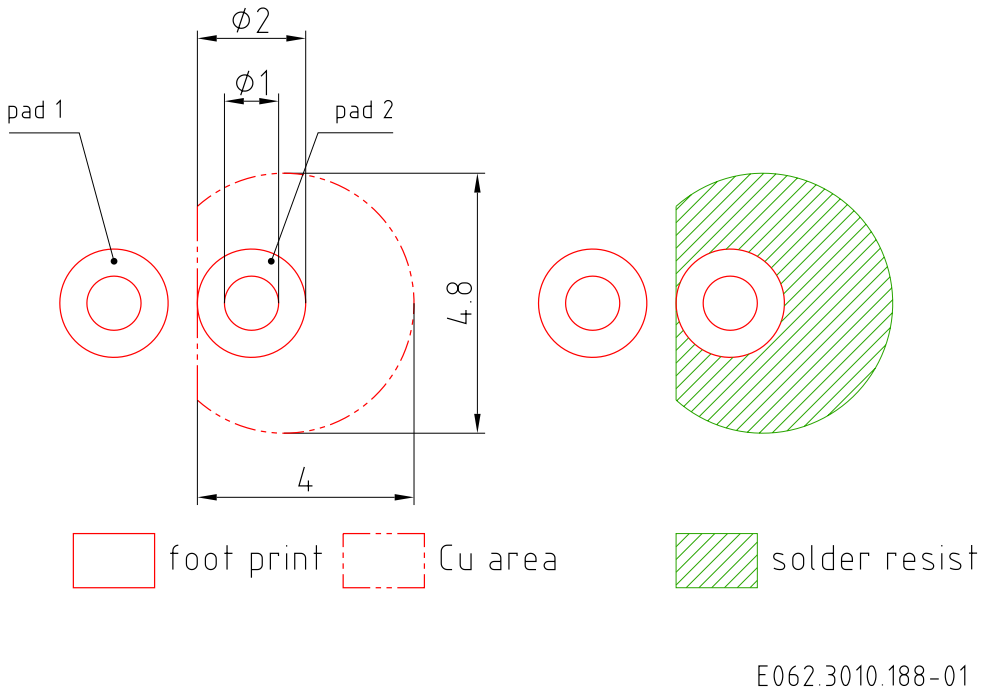

Pad 1: cathode

TTW Soldering

IEC-61760-1 TTW

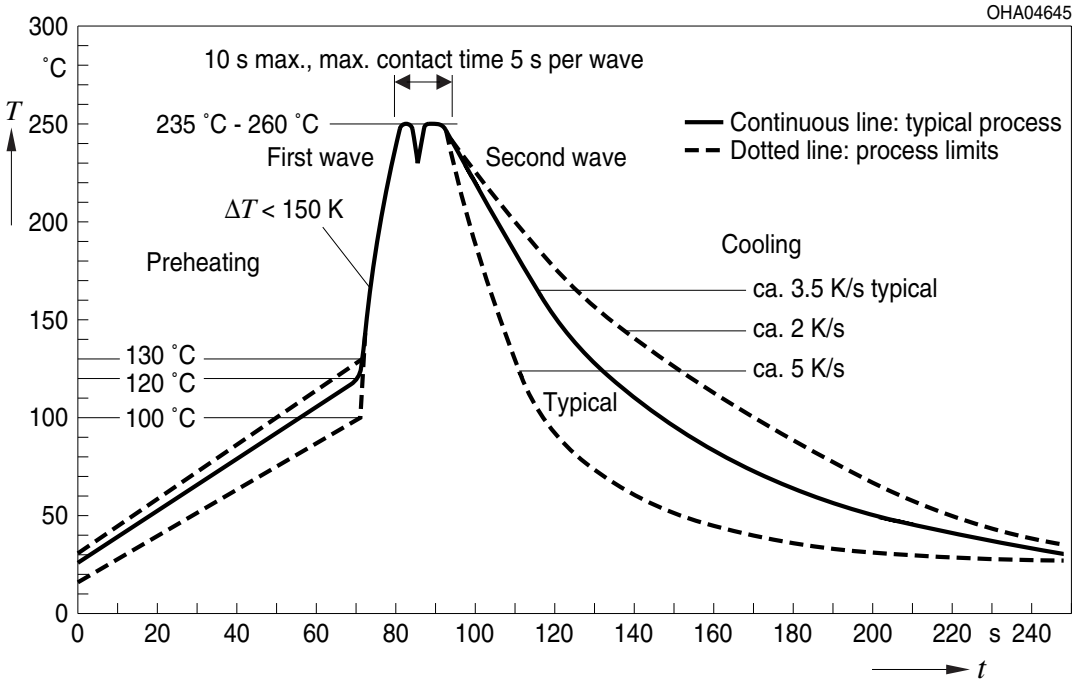

Notes

The evaluation of eye safety occurs according to the standard IEC 62471:2006 (photo biological safety of lamps and lamp systems). Within the risk grouping system of this IEC standard, the device specified in this data sheet falls into **exempt risk group - Exempt**.

Subcomponents of this device contain, in addition to other substances, metal filled materials including silver. Metal filled materials can be affected by environments that contain traces of aggressive substances. Therefore, we recommend that customers minimize device exposure to aggressive substances during storage, production, and use. Devices that showed visible discoloration when tested using the described tests above did show no performance deviations within failure limits during the stated test duration. Respective failure limits are described in the IEC60810.

Packing information is available on the internet (online product catalog).

For further application related information please visit www.osram-os.com/appnotes

Disclaimer

Attention please!

The information describes the type of component and shall not be considered as assured characteristics. Terms of delivery and rights to change design reserved. Due to technical requirements components may contain dangerous substances.
For information on the types in question please contact our Sales Organization.
If printed or downloaded, please find the latest version on our website.

Packing

Please use the recycling operators known to you. We can also help you – get in touch with your nearest sales office. By agreement we will take packing material back, if it is sorted. You must bear the costs of transport. For packing material that is returned to us unsorted or which we are not obliged to accept, we shall have to invoice you for any costs incurred.

Product and functional safety devices/applications or medical devices/applications

Our components are not developed, constructed or tested for the application as safety relevant component or for the application in medical devices.
Our products are not qualified at module and system level for such application.

In case buyer – or customer supplied by buyer – considers using our components in product safety devices/ applications or medical devices/applications, buyer and/or customer has to inform our local sales partner immediately and we and buyer and /or customer will analyze and coordinate the customer-specific request between us and buyer and/or customer.

Glossary

1) **Radiant intensity:** Measured at a solid angle of Ω = 0.001 sr

2) **Brightness:** The brightness values are measured with a tolerance of ±11%.

3) **Reverse Operation:** This product is intended to be operated applying a forward current within the specified range. Applying any continuous reverse bias or forward bias below the voltage range of light emission shall be avoided because it may cause migration which can change the electro-optical characteristics or damage the LED.

4) **Forward Voltage:** The forward voltages are measured with a tolerance of ±0.1 V.

5) **Total radiant flux:** Measured with integrating sphere.

6) **Thermal resistance:** junction - soldering point, of the device only, mounted on an ideal heatsink (e.g. metal block)

7) **Thermal resistance:** junction - ambient, mounted on PC-board (FR4), padsize 16 mm² each

8) **Typical Values:** Due to the special conditions of the manufacturing processes of semiconductor devices, the typical data or calculated correlations of technical parameters can only reflect statistical figures. These do not necessarily correspond to the actual parameters of each single product, which could differ from the typical data and calculated correlations or the typical characteristic line. If requested, e.g. because of technical improvements, these typ. data will be changed without any further notice.

9) **Testing temperature:** TA = 25°C (unless otherwise specified)

10) **Tolerance of Measure:** Unless otherwise noted in drawing, tolerances are specified with ±0.1 and dimensions are specified in mm.

Revision History

Version	Date	Change
1.4	2021-09-21	Maximum Ratings
1.5	2021-10-13	Maximum Ratings Characteristics
1.6	2021-11-18	Features
1.7	2022-08-08	Applications New Layout
1.8	2023-03-20	Ordering Information Brightness Groups

EU RoHS and China RoHS compliant product
此产品符合欧盟 RoHS 指令的要求；
按照中国的相关法规和标准，
不含有毒有害物质或元素。

Published by ams-OSRAM AG
Tobelbader Strasse 30, 8141 Premstaetten, Austria
Phone +43 3136 500-0
ams-osram.com
© All rights reserved