SFAPI Series

Fixed Axial Power Inductors

The SFAPI Series is an entirely new line of fixed axial leaded power inductors. When the current flowing through the coil changes, the time-varying magnetic field induces a counter electromotive force in the conductor which opposes the change in current that created it. As such, inductors oppose any changes in current that pass through them. In power supplies, an inductor's role is to prevent sudden changes in current used. Working alongside a capacitor, an inductor prevents sudden changes in the power supply's output voltage and current.

Due to the ferrite core material grade, these fixed power inductors have high permeability, increased electrical resistivity, and low eddy current losses such that their characteristics make them suitable for multiple high-frequency applications. Power Inductors are used in variety of functions including differential mode filtering, as output chokes and energy storage devices in power supply topologies such a buck, boost, SEPIC and Cuk etc.

General Features

- High current choke
- Wide inductance range
- High saturation ferrite core
- UL rated shrink tube covering
- Low-cost power inductor
- Available in Tape & Reel packaging

Specifications

- Wide inductance range 27 µH to 4.7 mH (1.28 A ~ 0.1 A)
- High current choke
- High saturation ferrite core
- Operating temperature range: -40 °C to +125 °C
- Storage temperature component: -40 °C to +125 °C

Applications

- Switching regulators
- Power Amplifiers, inverters and converters
- Power Supplies (buck, boost, SEPIC, Cuk)
- SCR and Triac controls
- Speaker crossover networks
- RFI suppression filters / RFI tuning coils
- Various other applications (i.e. snubber circuits etc.)

signal TRANSFORMER
a bel group

RoHS Compliant

REACH COMPLIANCE

belfuse.com/signal

Please read our datasheet & drawing disclaimer here.

PRODUCT IDENTIFICATION

SFAPI - 470 K - UL - TR

Type / Product Series
SFAPI = Signal Fixed Axial Power Inductors

Inductance *
470 = 47 µH

* Note: Expressed by three figures. The unit is micro henry (µH). The first and second figures are significant digits, the third figure expresses the number of zeros which follow the two figures.

If there is a decimal point, it is expressed by the capital letter "R" (3R9 = 3.9 µH). In that case, all figures are significant digits.

Packaging
TR = Tape & Reel
No code = Bulk

Sleeve
UL = UL Tape (black)

Inductance Tolerance
K = ±10%

MECHANICAL SPECIFICATIONS

Dimensions are in mm.

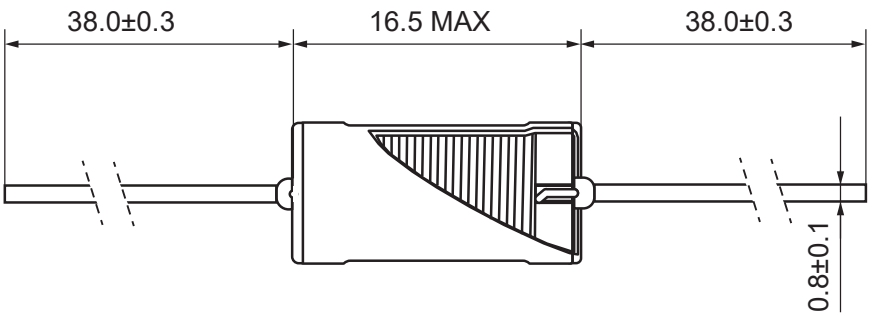

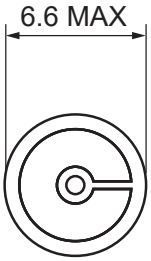

SCHEMATIC

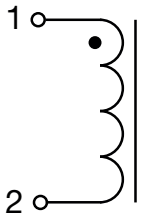

● Start point

Custom versions available upon request.

signal TRANSFORMER
a bel group

128 Atlantic Avenue, Lynbrook, NY 11563
Toll Free 866-239-5777 | Tel 516-239-5777 | Fax 516-239-7208
sales@signaltransformer.com | techhelp@signaltransformer.com
belfuse.com/signal

© 2022 Signal Transformer Specifications subject to change without notice.

Please read our datasheet & drawing disclaimer here.

ELECTRICAL SPECIFICATIONS

Electrical specifications for all part numbers measured at 25°C unless otherwise stated.

Part Number	Inductance @ 1 kHz (µH)	DCR Max (Ω)	Temperature Rise Current Max. (A)
SFAPI-270K-UL	27	0.058	1.280
SFAPI-330K-UL	33	0.075	1.008
SFAPI-470K-UL	47	0.109	0.804
SFAPI-101K-UL	100	0.208	0.632
SFAPI-471K-UL	470	1.150	0.315
SFAPI-681K-UL	680	1.610	0.250
SFAPI-102K-UL	1000	2.300	0.200
SFAPI-122K-UL	1200	2.650	0.200
SFAPI-182K-UL	1800	4.030	0.158
SFAPI-222K-UL	2200	4.480	0.158
SFAPI-332K-UL	3300	6.560	0.125
SFAPI-472K-UL	4700	10.50	0.100

Notes:
1) I sat: The current when the inductance becomes 10% lower than its initial value (Ta = 20°C).
2) I rms: The current when temperature of coil increase up to max. ΔT ≤ 40°C (Ta = 20°C).

- **Test equipment**
  L: measured on Agilent 4284A LCR meter or equivalent
  DCR: measured on Chroma 16502 micro-OHM meter or equivalent
  I sat & I rms: measured on Agilent 4284A LCR meter with 42841A Current Source or equivalent.

- **Notice:**
  Please read Cautions and Warnings and Notes for electrical characteristics test at the end of this document

INDUCTANCE VS DC CURRENT CURVE

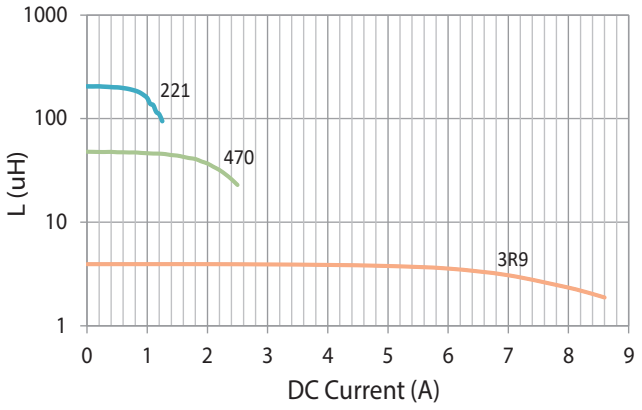

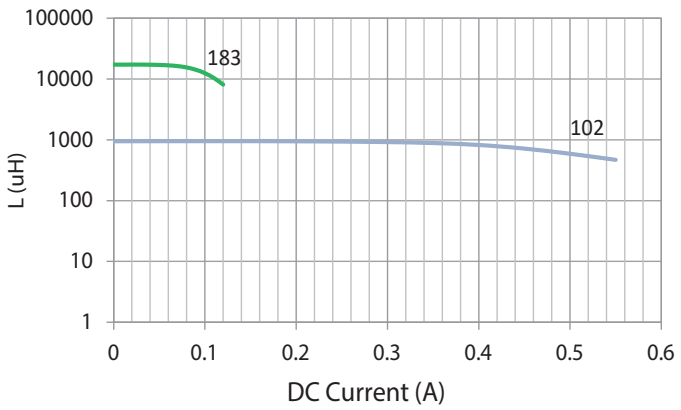

Custom versions available upon request.

signal TRANSFORMER a bel group

128 Atlantic Avenue, Lynbrook, NY 11563
Toll Free 866-239-5777 | Tel 516-239-5777 | Fax 516-239-7208
sales@signaltransformer.com | techhelp@signaltransformer.com
belfuse.com/signal

© 2022 Signal Transformer Specifications subject to change without notice.

Please read our datasheet & drawing disclaimer here.

RECOMMENDED REFLOW SOLDERING CONDITIONS (DIP-TYP)

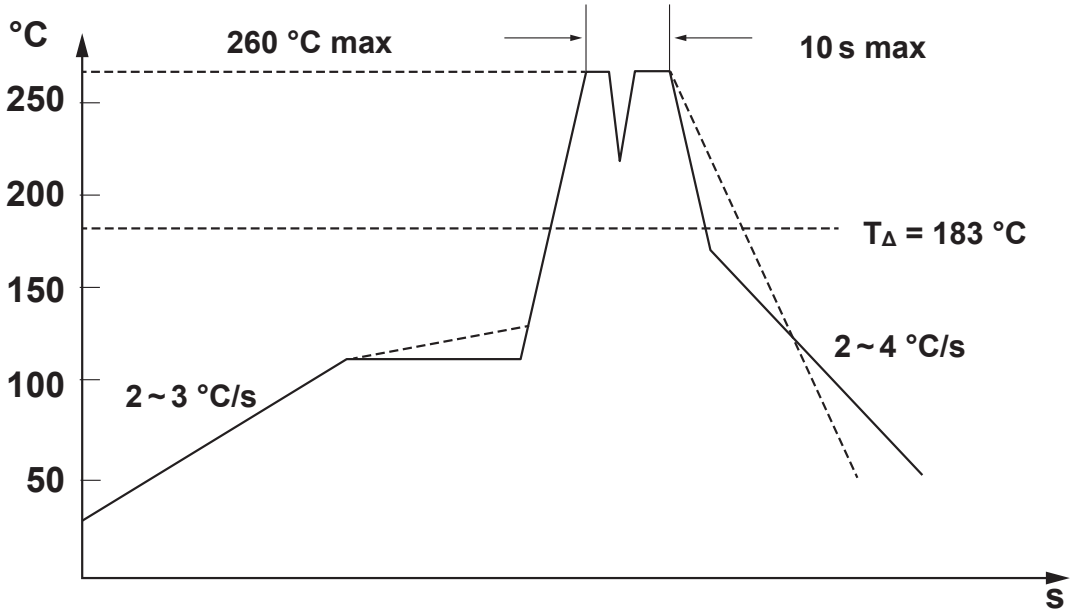

ADD:

The recommended reflow conditions as above graph, are set according to our soldering equipment. Due to various manufactures may have different reflow soldering equipment, products, process conditions, set methods. And so on, when setting the reflow conditions,

Please adjust and confirm according to users' environment/equipment.

SOLDERING IRON (REWORK)

1) Use soldering iron to solder inductors by hand, times does not exceed 350 degrees 3 times.

2) When soldering iron welding, please try to avoid contacting the inductor itself. (definitely do not contact the wire)

3) To solder inductors by soldering iron is not recommended).

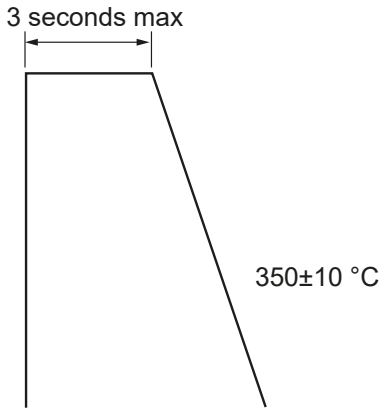

Soldering iron power: 30 W max

Custom versions available upon request.

signal TRANSFORMER
a bel group

128 Atlantic Avenue, Lynbrook, NY 11563
Toll Free 866-239-5777 | Tel 516-239-5777 | Fax 516-239-7208
sales@signaltransformer.com | techhelp@signaltransformer.com
belfuse.com/signal

© 2022 Signal Transformer Specifications subject to change without notice.

Please read our datasheet & drawing disclaimer here.

IN BAG PACKAGE SPECIFICATIONS

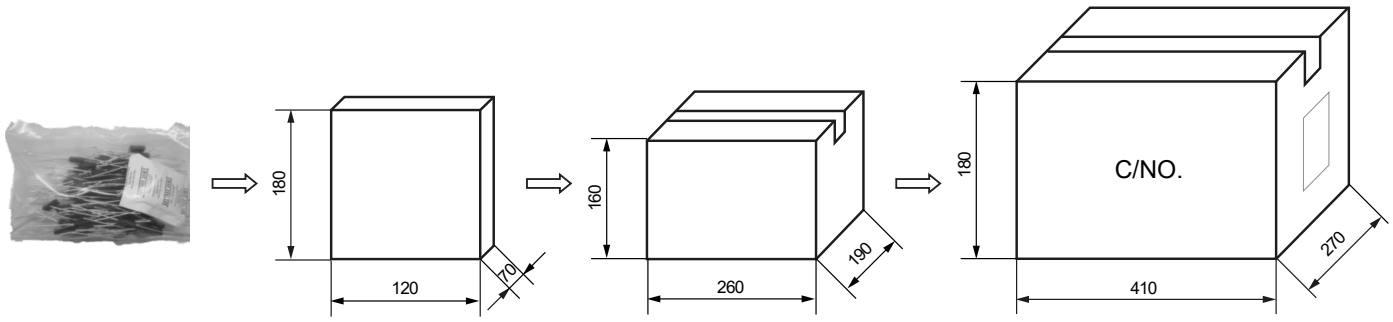

Small Box Inside Box Outside Carton

STORAGE CONDITIONS

a) Temperature and humidity conditions: <35 and < 35 65%.
b) Recommendation: inductors should be used within 6 months from the time or delivery
c) Packaging material should be kept away from where chlorine or sulfur exists.

PACKAGE QUANTITY

Series	Bag	Pcs / Bag	Small Box	Inside Box	Outside Carton
SFAPI	7X5	200	600	2400	4800

TAPE AND REEL SPECIFICATIONS

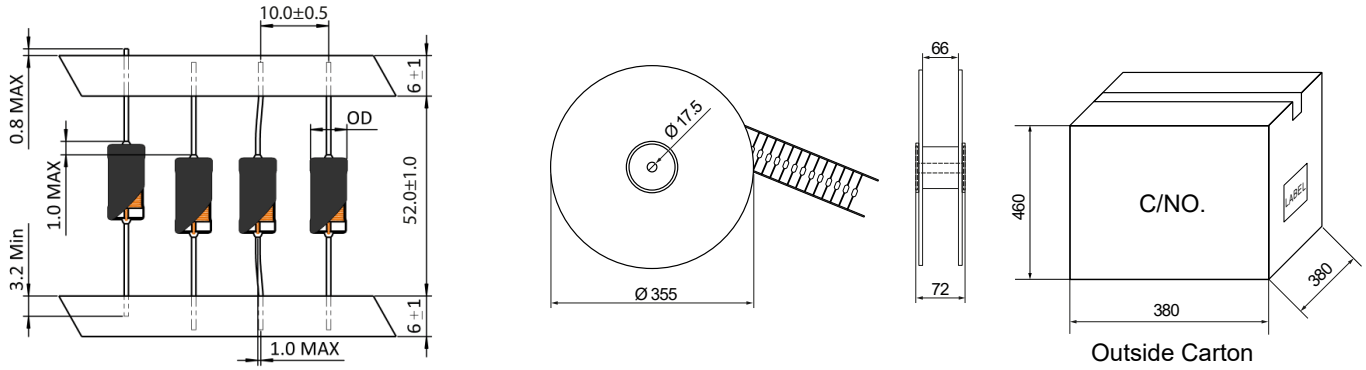

Outside Carton

STORAGE CONDITIONS

a) Temperature and humidity conditions: <35 and < 35 65%.
b) Recommendation: inductors should be used within 6 months from the time or delivery
c) Packaging material should be kept away from where chlorine or sulfur exists.

PACKAGE QUANTITY

Series	Type	Packaging Quantity (pcs)		
		Parts / Box	Parts / Reel	Parts / Carton
SFAPI	T5X2	-	1000	5000

Custom versions available upon request.

signal TRANSFORMER a bel group

128 Atlantic Avenue, Lynbrook, NY 11563
Toll Free 866-239-5777 | Tel 516-239-5777 | Fax 516-239-7208
sales@signaltransformer.com | techhelp@signaltransformer.com
belfuse.com/signal

© 2022 Signal Transformer Specifications subject to change without notice.

Please read our datasheet & drawing disclaimer here.

About Signal Transformer

Signal Transformer is known as the world's leader of wire wound magnetic solutions since 1959. With over 50 years of experience manufacturing transformers, chokes, inductors and custom or modified standard products. Signal offers not only the most comprehensive line of certified standard power conversion products, with our vast engineering, manufacturing and regulatory resources; Signal Transformer excels in the design and manufacturer of cost effective, specialized platforms.

For more information, please contact us:

128 Atlantic Avenue
Lynbrook, NY 11563

Toll Free +1 866-239-5777
Tel +1 516-239-5777
Fax +1 516-239-7208

sales@signaltransformer.com
techhelp@signaltransformer.com

signal TRANSFORMER
a bel group

belfuse.com/signal

© 2022 Signal Transformer Specifications subject to change without notice. SFAPI Series Dec 16 2022

Please read our datasheet & drawing disclaimer here.