High Power Chip Resistors

SC3 Series

Features:

- 3 watts in a 1 watt size package
- Resistance range from 1R0 to 10K
- Tolerances to ±1%
- AEC-Q200 qualified
- Low thermal impedance
- Wide terminations to enhance robustness

All Pb-free parts comply with EU Directive 2011/65/EU amended by (EU) 2015/863 (RoHS3)

Electrical Data

		SC3
Power rating at 70°C	W	3
Resistance range	Ω	1R0 to 10K
Resistance tolerance	%	1, 2, 5
TCR	ppm/°C	±100
LEV	V	200
Standard values		E24 or E96
Ambient temperature range	°C	-55 to +150
Pad / trace area [1]	mm^2	300

Note 1: Recommended minimum pad & adjacent trace area for each termination for rated dissipation on FR4 PCB

Physical Data

Dimensions and weight

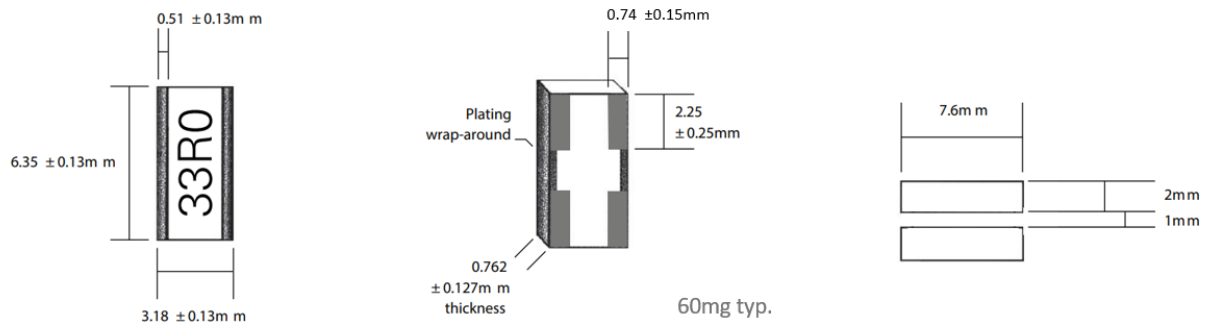

Construction

Resistive thick-film material, overglaze and organic protection are screen printed on a 96% alumina substrate. The components are laser trimmed to achieve the required resistance tolerance.

Terminations

The wrap-around terminations have an electroplated nickel barrier and matte tin or tin-lead finish. This ensures excellent leach resistance properties and solderability. Chips can withstand immersion in solder at 250°C for 90 seconds and are suitable for reflow or wave solder mounting processes.

Marking

The body protection and marking are resistant to all normal industrial cleaning solvents suitable for printed circuits. Chips are packed and mounted with marking side up.

Processing

SC3 chips are placed on the termination pads with the actual resistor element mounted face down. For reflow of SC3 parts, a solder paste thickness of not less than 100µm is recommended.

General Note
TT Electronics reserves the right to make changes in product specification without notice or liability.
All information is subject to TT Electronics' own data and is considered accurate at time of going to print.

© TT Electronics plc

High Power Chip Resistors

SC3 Series

Performance Data

AEC-Q200 Table 7 Reference	Test	Method		Maximum (add R01)	Typical
3	High temperature exposure	MIL-STD-202 Method 108	±ΔR%	0.5	0.2
4	Temperature cycling	JESD22 Method JA-104	±ΔR%	0.25	0.1
6	Moisture resistance	MIL-STD-202 Method 106	±ΔR%	0.5	0.2
7	Biased humidity	MIL-STD-202 Method 103	±ΔR%	0.5	0.1
8	Operational life (cyclic load)	MIL-STD-202 Method 108	±ΔR%	1	0.5
14	Vibration	MIL-STD-202 Method 204	±ΔR%	0.25	0.05
15	Resistance to solder heat	MIL-STD-202 Method 210	±ΔR%	0.25	0.05
16	Thermal shock	MIL-STD-202 Method 107	±ΔR%	0.5	0.2
18	Solderability	J-STD-002		>95% coverage	
21	Board flex	AEC-Q200-005	±ΔR%	0.25	0.05
22	Terminal strength	AEC-Q200-006	±ΔR%	0.25	0.05
	Short term overload	Lesser of 6.25 x Pr & LEV x 2 for 2s	±ΔR%	0.5	-
	Low temperature storage	-65°C for 100 hours	±ΔR%	0.5	
	Low temperature operation	-65°C for 1 hour then Pr for 45 mins	±ΔR%	0.5	
	Shelf-life test	Room temp. for 12 months	±ΔR%	0.1	
	Leach resistance	Solder dip at 250°C		90s minimum	

Thermal Data

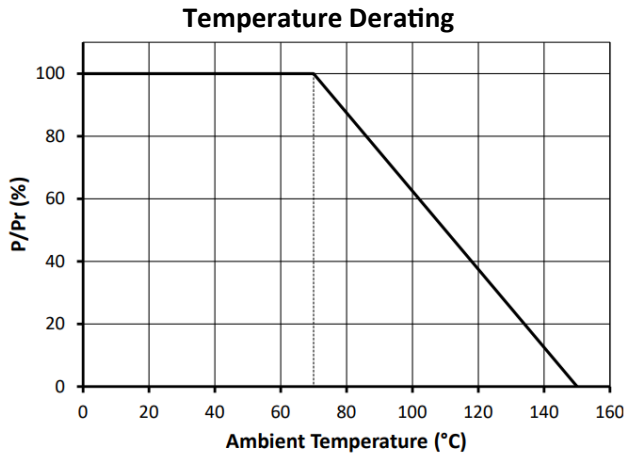

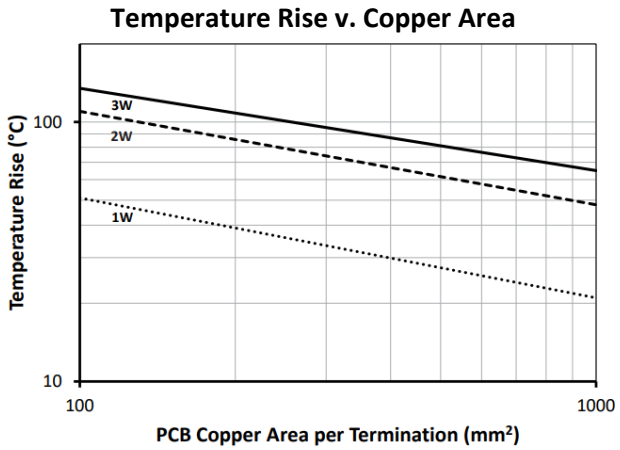

Pulse Data

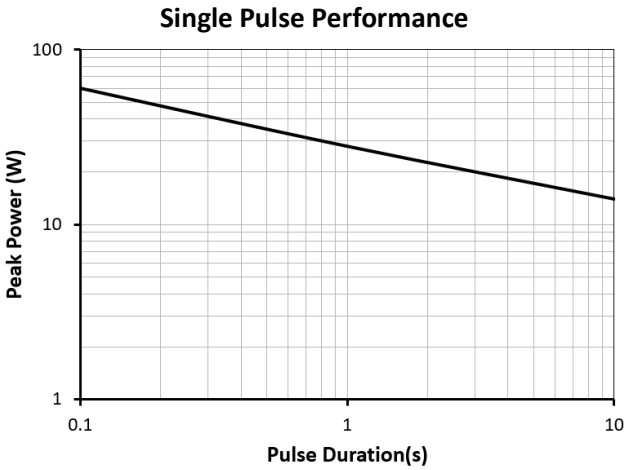

© TT Electronics plc

Packaging

SC3 resistors are supplied taped and reeled as per IEC 286-3. The standard quantity per reel is 1800 parts. For full details of tape and reel dimensions see:
https://www.ttelectronics.com/TTElectronics/media/ProductFiles/Application-Note/PS003-Packing-of-Specialist-Chip-Resistors.pdf

Ordering Procedure

This product has two valid part numbers:

European (Welwyn) Part Number: SC3-33RFI (33Ω ±1%, Pb-free)

S	C	3	-	3	3	R		F	I	
1				2				3	4	

1 Type	2 Value	3 Tolerance	4 Termination & Packing
SC3	E24 = 3/4 characters E96 = 3/4 characters R = ohms K = kilohms	F = ±1% G = ±2% J = ±5%	I = Pb-free, standard packing 1800/reel PB = SnPb, standard packing 1800/reel

USA (IRC) Part Number: SCW-SC3LF-33R0F (33Ω ±1%, Pb-free)

S	C	W	-	S	C	3	L	F	-	3	3	R	0	F
1				2			3			4				5

1 Family	2 Model	3 Termination	4 Value	5 Tolerance	Packing
SCW	SC3	Omit for SnPb LF = Pb-free	3 digits + multiplier R = ohms for values <100 ohms	F = ±1% G = ±2% J = ±5%	Tape & reel, 1800/reel

© TT Electronics plc