REV.	ECN NO.	DATE	SIGN	DESCRIPTION
B	LEN17A0113~124	2017-10-14	Lingpeng	Add The Label And Change The Title
C	N180019	2019-03-02	Peng	Add 5Pole
D	C230888	2023-07-03	He Long	△D *3

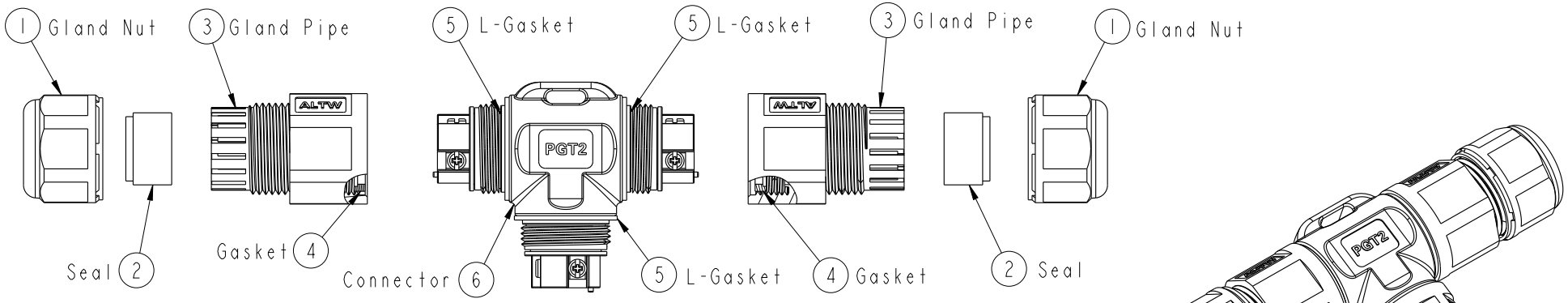

ALTW
CONFIDENTIAL
2019-03-02
R&D DEPT.

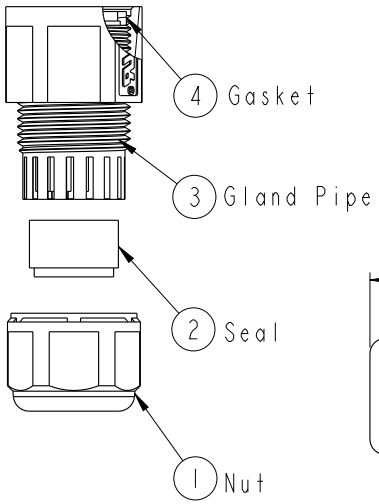

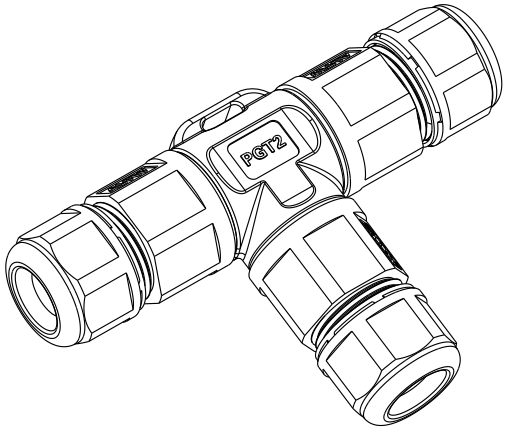

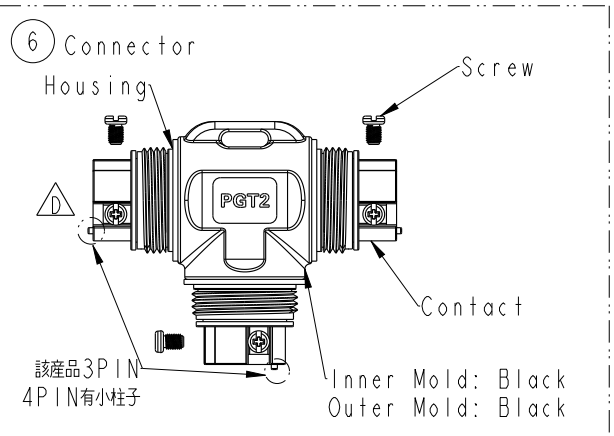

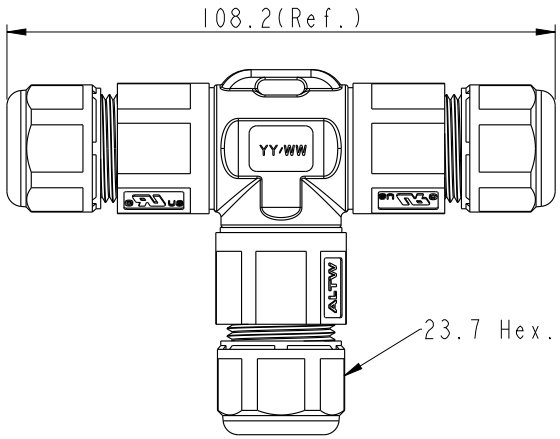

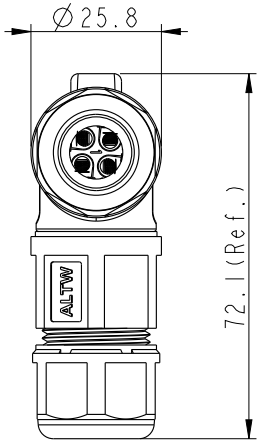

UNIT: mm	TITLE: △B ULT2 Cable Joiner Screw-in Type		ITEM NO	DRAWN BY: Peng	DATE: 2019-03-02
TOLERANCE ±0.5mm	SCALE: 67:100	SIZE: A4	SHEET 1 OF 2	DWG NO: SC-L-ULT2-XX-XX	CHECKED BY: Mafei	DATE: 2019-03-02
	REV.: D	WC-REV.: .0	(QC): Inspection item	CUSTOMER: ALTW	APPROVED BY: Jerry	DATE: 2019-03-02

Amphenol LTW
安費諾亮泰企業股份有限公司

THIS DOCUMENT IS SUBJECT TO CHANGE WITHOUT NOTICE. IT IS CONFIDENTIAL AND A PROPERTY OF Amphenol LTW. DISCLOSURE TO THIRD PARTY HAS TO BE AUTHORIZED BY Amphenol LTW.

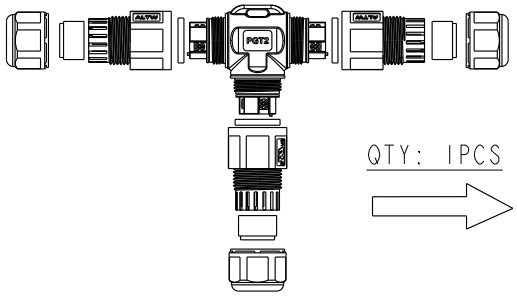

QTY: 1PCS

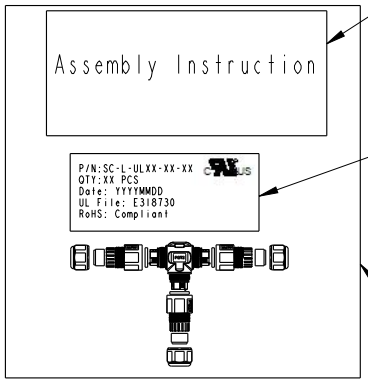

8 Instruction

10 Label

7 PE Bag

QTY: 75PCS

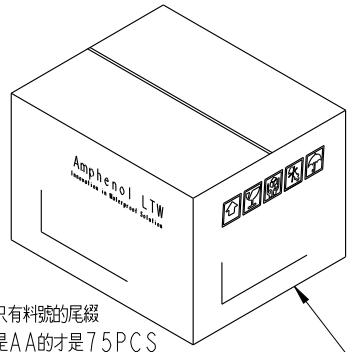

只有料號的尾綴
是AA的才是75PCS
其他料號爲90PCS

9 Carton

ALTW
CONFIDENTIAL
2019-03-02
R&D DEPT.

Both A Unassembled product And An Instruction Are In A PE Bag.
（將一套未組裝的產品和說明書，放置於一個PE袋，並封口）

SC-L-ULT2-XX-XX

L:Cable Joiner

Type: ULT2

Seal's Color:
- BL-Blue(藍色) For Cable Range: ∅4.5~∅6.5mm
- YW-Yellow(黃色) For Cable Range: ∅6.5~∅8.5mm
- GN-Green(綠色) For Cable Range: ∅8.5~∅10.5mm
- RD-Red(紅色) For Cable Range: ∅10.5~∅12.5mm
- AA-All Seals For Cable Range: ∅4..5~∅12.5mm

No. of Condutor:
- 02-2Poles
- 03-3Poles
- 04-4Poles
- 05-5Poles

Note:

* QC Important Dimension To Check.
* Waterproof Rate: IP68 (50M,24H)
* Housing: PA66+GF, Black.
* Gland Nut: PA66, Black.
* Gland Pipe: PA66, Black.
* Contact: Brass, Nickel Plated
* Gasket & L- Gasket : Silicone, Yellow.
* Seal: Silicone, Blue & Yellow & Green & Red.
* Rated Voltage: 2~5 Pole 600V AC
* Rated Current: 2 & 3 Pole Max. 20A ,
  4 Pole Max. 15A.
  5 Pole Max. 10A.
* Operating Temperature: -40°~+105°.
* Gland Pipe Recommended Tightening Torque: 8~10 Kgf.cm(0.78~0.98 N.m)
* Gland Nut Recommended Tightening Torque: 8~10 Kgf.cm(0.78~0.98 N.m)
* Seal For Cable OD: ∅4.5~∅6.5mm, Blue.
  ∅6.5~∅8.5mm, Yollow.
  ∅8.5~∅10.5mm, Green .
  ∅10.5~∅12.5mm, Red.
* Screws for Wire connection recommended tightening torque: 2.00~4.50kgf.cm / 0.196~0.44 N.m
* Applicable Wire gauge: 2~4 Pole:18AWG ~ 12AWG
  5 Pole:20AWG ~ 16AWG
* UL2238 Certification

圓柱表示該產品有小柱子
沒有標註的PIN表示產品沒有小柱子

Pole Assignments Front View

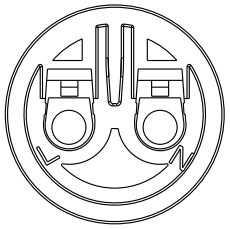

2 Pole

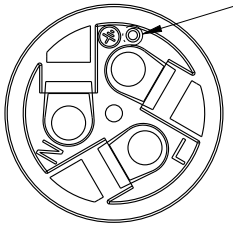

3 Pole

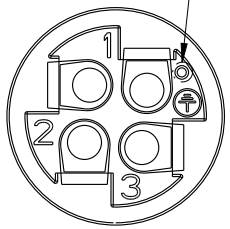

4 Pole

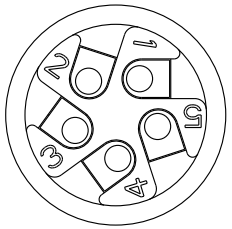

5 Pole

UNIT:mm	TITLE: ULT2 Cable Joiner Screw-in Type			ITEM NO	DRAWN BY: Peng	DATE: 2019-03-02
TOLERANCE ±0.5mm	SCALE: 67:100	SIZE: A4	SHEET 2 OF 2	DWG NO: SC-L-ULT2-XX-XX	CHECKED BY: Mafei	DATE: 2019-03-02
	REV.: D	WC-REV.: .0	QC: Inspection item	CUSTOMER: ALTW	APPROVED BY: Jerry	DATE: 2019-03-02

Amphenol LTW
安費諾亮泰企業股份有限公司

THIS DOCUMENT IS SUBJECT TO CHANGE WITHOUT NOTICE. IT IS CONFIDENTIAL AND A PROPERTY OF Amphenol LTW. DISCLOSURE TO THIRD PARTY HAS TO BE AUTHORIZED BY Amphenol LTW.