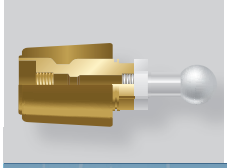

TE'S RAYCHEM SCREENED COUPLING CONNECTORS RSTI-CC-X9

Large Cross Sections, 1250A up to 42 kV

Product Features:

- The screened coupling connector is designed to mate with the rear end of the RSTI base screened connector system designed for 42 kV
- The insulation of the coupling connector is made of a highly modified silicone rubber characterised by high tracking resistance, elongation at break and non-flammability
- A thin-walled screen is permanently bonded onto the insulation and protects the connection system against accidental contact
- The screened coupling connector need not be removed for oversheath testing
- The combination of screened connector and coupling connector exceeds CENELEC HD 629.1 S1 requirements, which include BS, VDE and other international specifications
- Design of combination fits 630A and 1250A bushings (Interface “C1” and “C2”) as specified by EN 50180 and EN 50181
- The compact design supports the use of double «T» connections inside standard terminal boxes
- The wide application range covers cable cross-sections from 400 mm² to 1000 mm²
- Conductor connection with mechanical lugs
- Easily accessible rear plug with capacitive test point
- Few accessories required for system test and earth connection
- Complete kit including lugs for easier installation and storage

Design and construction:

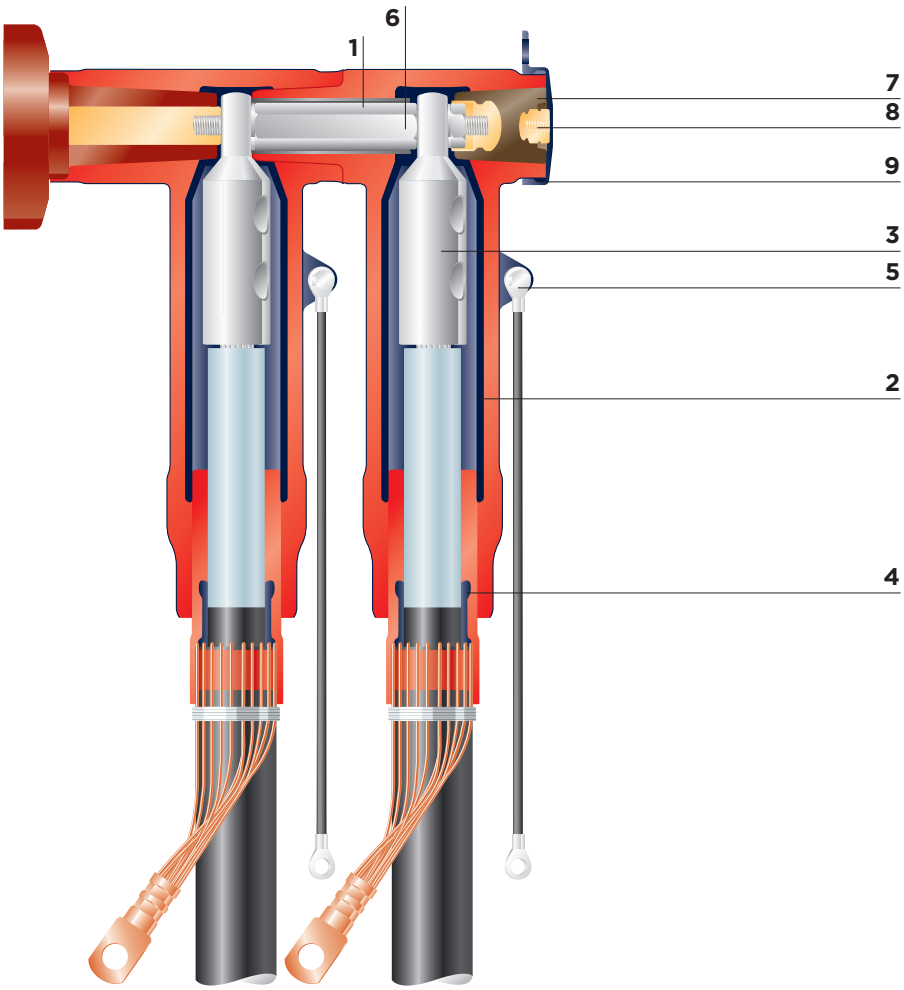

1. Screened body
A thin walled conductive outer screen is permanently bonded to the silicone rubber insulating material of the body.

2. Inner screen
A conductive inner layer, as a Faraday cage around the mechanical lug, prevents corona at rated voltage.

3. Mechanical lug
Specially designed mechanical lugs for connecting either aluminium or copper conductor cables.

4. Stress cone adapter
Relieves electrical stress at the point where the cable screen is cut. The insulated section, extending beyond the wire shielding, provides a convenient point for over sheath testing.

5. Earthing eye and ground lead
Provides a connection point for earthing the screen.

6. Threaded pin assembly
A threaded pin assembly together with a spring washer and hex nut ensure high-performance electrical and mechanical contact with the bushing.

7. Rear plug with test point
Removable rear plug with capacitive test point.

8. Test point
The test point is used to determine whether the circuit is energised; alternatively it can be used for phasing.

9. Conductive end cap
Electrical screen and protection of the rear end of the separable connector.

Applications

DOUBLE CONNECTION
Material required for 3 phases:
1 x RSTI-x95x (Basic kit)
1 x RSTI-CC-x95x (Coupling connector kit)

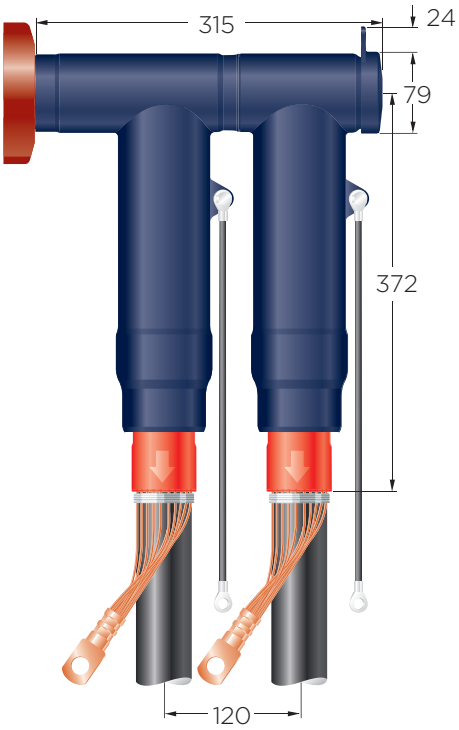

SINGLE CORE BRANCH OFF
Items required for 3 phases:
1 x RSTI-x95x (Basic kit)
1 x RSTI-68TP (Terminating plug kit)
2 x RSTI-CC-x95x (Coupling connector kit)

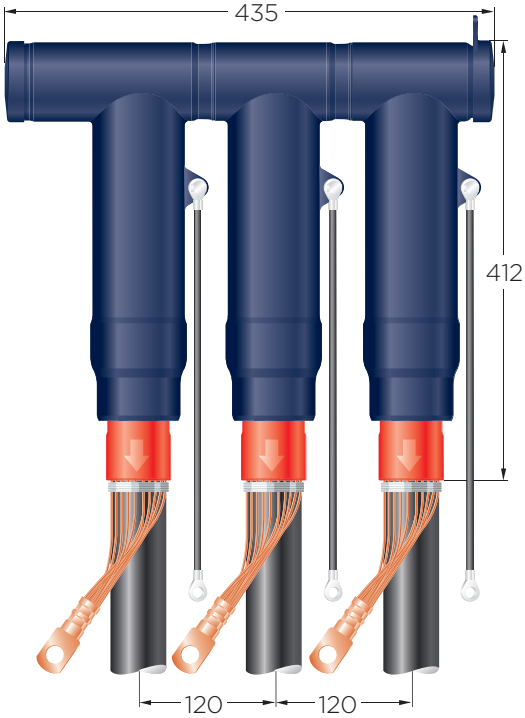

Cross Section (mm²)	OF CONNECTOR BODY MAX Ø		
	12 kV	24 kV	42 kV
630	90	94	99
800	94	98	103

DISCONNECTABLE INLINE JOINT
Items required for 3 phases:
1 x RSTI-x95x (Basic kit)
1 x RSTI-68TP (Terminating plug kit)
1 x RSTI-CC-x95x (Coupling connector kit)

Note: All applications as shown in the brochure need to have a mechanical support, based on the requirements for dynamic short circuit.

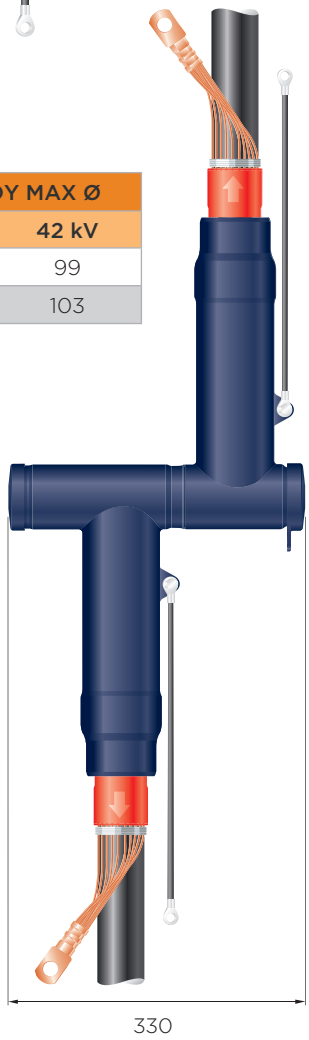

EARTHING ADAPTER
Ref. no.: RSTI-68EA20;
Ball diameter: 20 mm
RSTI-68EA25;
Ball diameter: 25 mm

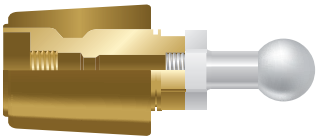

Accessories

TEST ROD
Ref. no.: RSTI-68TR; Length: 310 mm
RSTI-68TRL; Length: 460 mm
RSTI-68TRA; Kit includes
2 short and 1 long test rod

TERMINATING PLUG
Ref. no.: RSTI-68TP

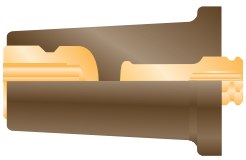

INSULATING CAP
Ref. no.: RSTI-68RC
One piece per set

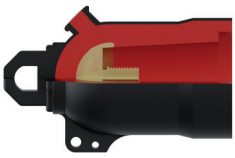

TECHNICAL DATA FOR RSTI-CC-68	
Cable insulation diameter range	28.9 mm - 59.0 mm
Connector cross-section range	400 mm² - 1000 mm²
Maximum system voltage	42 kV
Continuous current rating	1250A*
Basic impulse level	200 kV
Partial discharge at 2 U_0	< 2 pC
AC voltage withstand, 5 min.	93.5 kV
DC voltage withstand, 15 min.	125 kV
Thermal short circuit, 1 s	74.5 kA
Thermal short circuit, 3 s	43 kA
Dynamic short circuit	125 kA

* 1250 A is relevant for upgraded bushing C2 and cables with copper conductors

The adapters meet the international CENELEC HD 629.1 S2 specification.

SELECTION TABLE			
Cross Section (mm²)	Diameter Core Insulation (mm)		Reference Number Conductor Material
	min	max	AL or CU
SCREENED SEPARABLE CONNECTION SYSTEM 12 kV WITH MECHANICAL LUGS			
400	28.9	36.4	RSTI-CC-3951
500	28.9	36.4	RSTI-CC-3952
630	34.0	45.4	RSTI-CC-3953
800	34.0	45.4	RSTI-CC-3954
1000	39.1	59.0	RSTI-CC-3955
SCREENED SEPARABLE CONNECTION SYSTEM 24 kV WITH MECHANICAL LUGS			
400	34.0	45.4	RSTI-CC-5951
500 - 630	34.0	45.4	RSTI-CC-5952
630	39.1	59.0	RSTI-CC-5953
800	39.1	59.0	RSTI-CC-5954
1000	39.1	59.0	RSTI-CC-5955
SCREENED SEPARABLE CONNECTION SYSTEM 36 kV WITH MECHANICAL LUGS			
400	34.0	45.4	RSTI-CC-6951
500 - 630	39.1	59.0	RSTI-CC-6952
800	39.1	59.0	RSTI-CC-6953

FOR MORE INFORMATION:
TE Technical Support Centers

USA/Canada:	+1 800-327-6996
Brazil:	+55 11-2103-6023
Mexico:	+52 55-1106-0800
South America:	+57 1-319-8962
Benelux:	+32 16-508-695
France:	+33 (0) 38-058-3210
Germany/Switzerland:	+49 (0) 89-608-9903
Italy:	+39 335-834-3453
Middle East/Africa:	+971 4-211-7020
Russia:	+7 495-790-790-2-200
Spain/Portugal:	+34 912-681-885
UK:	+44 08708-707-500
China:	+86 400-820-6015

te.com/energy

©2021 TE Connectivity Ltd. All Rights Reserved. EPP-1757-02-21

TE Connectivity, TE connectivity (logo), EVERY CONNECTION COUNTS, AMP, AMPACT, Bowthorpe EMP, Crompton Instruments, Raychem, SIMEL, UTILUX are trademarks. Other logos, product and Company names mentioned herein may be trademarks of their respective owners. While TE has made every easonable effort to ensure the accuracy of the information in this brochure, TE does not guarantee that it is error-free, nor does TE make any other representation, warranty or guarantee that the information is accurate, correct, reliable or current. TE reserves the right to make any adjustments to the information contained herein at any time without notice. TE expressly disclaims all implied warranties regarding the information contained herein, including, but not limited to, any implied warranties of merchantability or fitness for a particular purpose. The dimensions in this brochure are for reference purposes only and are subject to change without notice. Specifications are subject to change without notice. Consult TE for the latest dimensions and design specifications.