RNF-3000-6/2-6-SP ✔ ACTIVE

RAYCHEM | RAYCHEM RNF-3000

TE Internal #: 5677784003

Heat Shrink Tubing, Blue, 3:1, Single Wall, Shrinks To 2 mm [.079 in], Irradiated Modified Polyolefin, RAYCHEM RNF-3000

View on TE.com >

Heat Shrink Tubing > RNF-3000 Heat Shrink Tubing





Tubing Product Type: **Heat Shrink Tubing**

Primary Product Color: **Blue**

Wall Type: **Single Wall**

Expanded Inside Diameter (Min): **6 mm [.236 in]**

Recovered Inside Diameter (Max): **2 mm [.079 in]**

All RNF-3000 Heat Shrink Tubing (209)

Features

Product Type Features

Tubing Product Type	Heat Shrink Tubing
Wall Type	Single Wall

Electrical Characteristics

Operating Voltage (Max)	.6 kV

Body Features

Fluid Type	Gasoline, Hydraulic Fluid, Lubricating Oil, Water
Primary Product Color	Blue
Shrink Ratio	3:1
Primary Product Material	Irradiated Modified Polyolefin
Flexibility	Flexible

Dimensions

Recovered Wall Thickness (Nominal)	.65 mm[.026 in]
Recovered Wall Thickness (Tolerance)	.1 mm[.003 in]
Expanded Inside Diameter (Min)	6 mm[.236 in]
Recovered Inside Diameter (Max)	2 mm[.079 in]
Tubing Size Range	2 – 6 mm[.079 – .236 in]

Usage Conditions

Shrink Temperature (Min)	80 °C
Tubing Flammability Type	Flame-Retardant
Operating Temperature Range	-55 – 135 °C[-67 – 275 °F]
Recovery Temperature	120 °C

Operation/Application

Mechanical Resistance	Abrasion, Fluids, Mechanical Damage, Strain Relief

Product Availability

Applicable Region	Global

Packaging Features

Packaging Method	Box

Other

Meets Low Outgassing Requirements	No
Product Source	Czech Republic

Product Compliance

For compliance documentation, visit the product page on TE.com>

EU RoHS Directive 2011/65/EU	Compliant
EU ELV Directive 2000/53/EC	Compliant
China RoHS 2 Directive MIIT Order No 32, 2016	有害物质含量符合标准要求 No Restricted Substance(s) Above Threshold
EU REACH Regulation (EC) No. 1907/2006	Current ECHA Candidate List: JUNE 2025 (250) Candidate List Declared Against: JUNE 2025 (250) Does not contain REACH SVHC
Halogen Content	Not Low Halogen - contains Br or Cl > 900 ppm.
Solder Process Capability	Not applicable for solder process capability

Product Compliance Disclaimer

This information is provided based on reasonable inquiry of our suppliers and represents our current actual knowledge based on the information they provided. This information is subject to change. The part numbers that TE has identified as EU RoHS compliant have a maximum concentration of 0.1% by weight in homogenous materials for lead, hexavalent chromium, mercury, PBB, PBDE, DBP, BBP, DEHP, DIBP, and 0.01% for cadmium, or qualify for an exemption to these limits as defined in the Annexes of Directive 2011/65/EU (RoHS2). Finished electrical and electronic equipment products will be CE marked as required by Directive 2011/65/EU. Components may not be CE marked. Additionally, the part

numbers that TE has identified as EU ELV compliant have a maximum concentration of 0.1% by weight in homogenous materials for lead, hexavalent chromium, and mercury, and 0.01% for cadmium, or qualify for an exemption to these limits as defined in the Annexes of Directive 2000/53/EC (ELV). Regarding the REACH Regulation, the information TE provides on SVHC in articles for this part number is based on the latest European Chemicals Agency (ECHA) 'Guidance on requirements for substances in articles' posted at this URL: https://echa.europa.eu/guidance-documents/guidance-on-reach

Compatible Parts



TE Part # EG1114-000
CV1981-ST-230V1600W-EU

Also in the Series | RAYCHEM RNF-3000

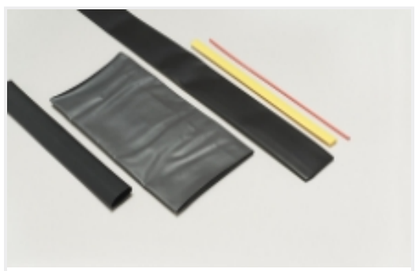

Heat Shrink Tubing(209)



Orange Heat Shrink Tubing(11)



Single Wall Tubing(209)

Customers Also Bought



TE Part #160337-2
RING TONGUE IS 18-14 0.295 X .940 TPBR



TE Part #160780-4
110 FASTON,REC.,16-20 AWG,TPBR



TE Part #170887-1
SLEEVE DIA5 SHUR PLUG NAT

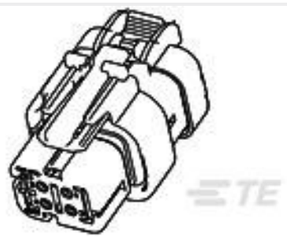

TE Part #776487-2
AS16,PLUG ASSY,ST,04P,N SEAL, CODE B



TE Part #CAT-M4599-B128
AMP Carrier for Receptacle Inserts

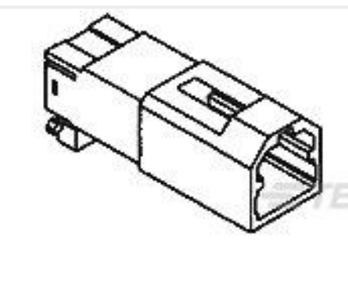

TE Part #174057-4
040 MLC CAP HSG 2P GREEN

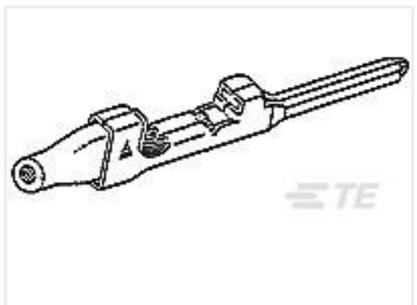

TE Part #175063-1
040 MULTILOCK TAB CONT. L/P

Documents

Product Drawings

RNF-3000-6/2-6-SP

English

Datasheets & Catalog Pages

Application Tooling for Raychem Heat Shrink Product

English

RNF-300 Tubing

English

Product Specifications

Quality Specification

English