Solid State Relays
1-Phase with Integrated Heatsink
Soft Start Switching
Types RGC1P..K..

- 1-pole AC solid state contactors
- Soft start switching for short wave infrared heaters
- Rated operational voltage: up to 660 VAC
- Rated operational current: up to 63 AAC
- Control input: 24VDC
- Integrated varistor protection on output
- Load ON LED indication
- 100kA short circuit current rating according to UL508
- DIN or panel mount

Product Description

The RGC1P..K provides a solution for starting of loads having a high cold to hot resistance ratio and hence it is very common for such loads to exhibit a high inrush current when switched on from a cold state. Such behaviour is very common for short wave infrared heaters.

When a control signal is applied to the RGC1P..K, a soft start is performed. The soft start time is settable through an accessible potentiometer. Once the soft start is complete, the RGC1P..K output switches ON and OFF according to the control signal. Soft starting is perfomed again if the control signal has been missing for more than 5 seconds.

The output of the RGC1P is protected against overvoltages by means of an integrated varistor across the output. Two front LEDs indicate the status of the load and control.

Specifications are at a surrounding temperature of 25°C unless otherwise specified.

Ordering Key

RGC 1 P 60 K 42 E D

- Solid state relay
- Number of poles
- Type of switching
- Rated operational voltage
- Control input
- Rated operational current
- Configuration layout
- External supply

Type Selection

SSR with heatsink	Type of switching	Rated voltage (Ue), Blocking voltage	Control input	Rated current[1] @40°C, I²t	Connection configuration	External supply (Us)
RGC1: 1-pole switching	P: Proportional (Soft starting)	23: 85 - 265 VAC, 800 Vp 48: 190 - 550 VAC, 1200 Vp 60: 410 - 660 VAC, 1200 Vp	K: 24 VDC +/-20%	30: 30 AAC, 1800 A²s 42: 43 AAC, 18000 A²s 62: 63 AAC, 18000 A²s	E: Contactor	D: 24 VDC/ AC

1: Refer to Current Derating

CARLO GAVAZZI

Selection Guide

Output voltage, Ue	Control input	External supply, Us	Power connection	Rated operational current @ 40°C (I²t) Product width		
				30 AAC (1800 A²s) 35 mm	43 AAC (18000 A²s) 35 mm	63 AAC (18000 A²s) 70 mm
85 - 265 VAC	19.2 - 28.8 VDC	24 VDC/AC	Screw	RGC1P23K30ED	-	-
			Box	-	RGC1P23K42ED	RGC1P23K62ED
190 - 550 VAC	19.2 - 28.8 VDC	24 VDC/AC	Screw	RGC1P48K30ED	-	-
			Box	-	RGC1P48K42ED	RGC1P48K62ED
410 - 660 VAC	19.2 - 28.8 VDC	24 VDC/AC	Screw	RGC1P60K30ED	-	-
			Box	-	RGC1P60K42ED	RGC1P60K62ED

General Specifications

Operational frequency range		45 to 65 Hz
Power factor		> 0.7 @ rated voltage
Touch Protection		IP20
LED status indication[2]		
	Green	Control ON, fully ON Supply ON, flashing 0.5s ON, 0.5s OFF
	Yellow	Load ON

2: Refer to LED Indications section

Pollution degree	2 (non-conductive pollution with possibilities of condensation)
Rated impulse withstand voltage, Uimp	6 kV (1.2/50µs)
Over-voltage category	III (fixed installations)
Isolation	
L1, T1, A1, GND, Us to case	4000 Vrms
L1, T1 to A1, GND, Us	2500 Vrms

Output Voltage Specifications

	RGC1P23..	RGC1P48..	RGC1P60..
Operational voltage range (Ue)	85-265 VAC	190-550 VAC	410-660 VAC
Blocking voltage	800 Vp	1200 Vp	1200 Vp
Leakage current @ rated voltage	≤ 5 mAAC	≤ 5 mAAC	≤ 5 mAAC
Internal Varistor across output	Yes	Yes	Yes

Output Specifications

	RGC1P..30	RGC1P..42	RGC1P..62
Rated operational current per pole[3] AC-51 @ Ta=25 °C AC-51 @ Ta=40 °C AC-55b @ Ta=40 °C	 30 AAC 30 AAC 30 AAC	 50 AAC 43 AAC 43 AAC	 73 AAC 63 AAC 63 AAC
Minimum operational current	250 mAAC	500 mAAC	500 mAAC
Rep. Overload Current PF = 0.7 UL508: T=40°C, tON=1s, tOFF=9s, 50cycles	84 AAC	126 AAC	168 AAC
Maximum transient surge current (Itsm), t=10ms	600 Ap	1900 Ap	1900 Ap
I²t for fusing (t=10ms), minimum	1800 A²s	18000 A²s	18000 A²s
Critical dv/dt (@ Tj init = 40°C)	1000 V/us	1000 V/us	1000 V/us

3: refer to Current Derating

Specifications are subject to change without notice (05.04.2018)

CARLO GAVAZZI

Input Specifications

Control input (A1 - GND)	19.2 - 28.8 VDC
Pick up voltage	19.2 VDC
Drop out voltage	10.0 VDC
Maximum initialisation time	250 ms
Response time (Input to Output)	2 half cycles
Input impedance	100k ohms
Reverse protection	Yes
Input protection vs. surges[4]	Yes
Overvoltage protection	up to 30 VDC

4: Refer to Electromagnetic Compatibility section

5: To be supplied from a Class 2 power source

Supply Specifications

Supply voltage range (Us)[5]	24 VDC, -15% / +20% 24 VAC, -15% / +15%
Overvoltage protection	up to 32 VDC/AC for 30 sec.
Reverse Protection	Yes
Surge Protection[4]	Yes, integrated
Max. supply current	30 mA

Output Power Dissipation

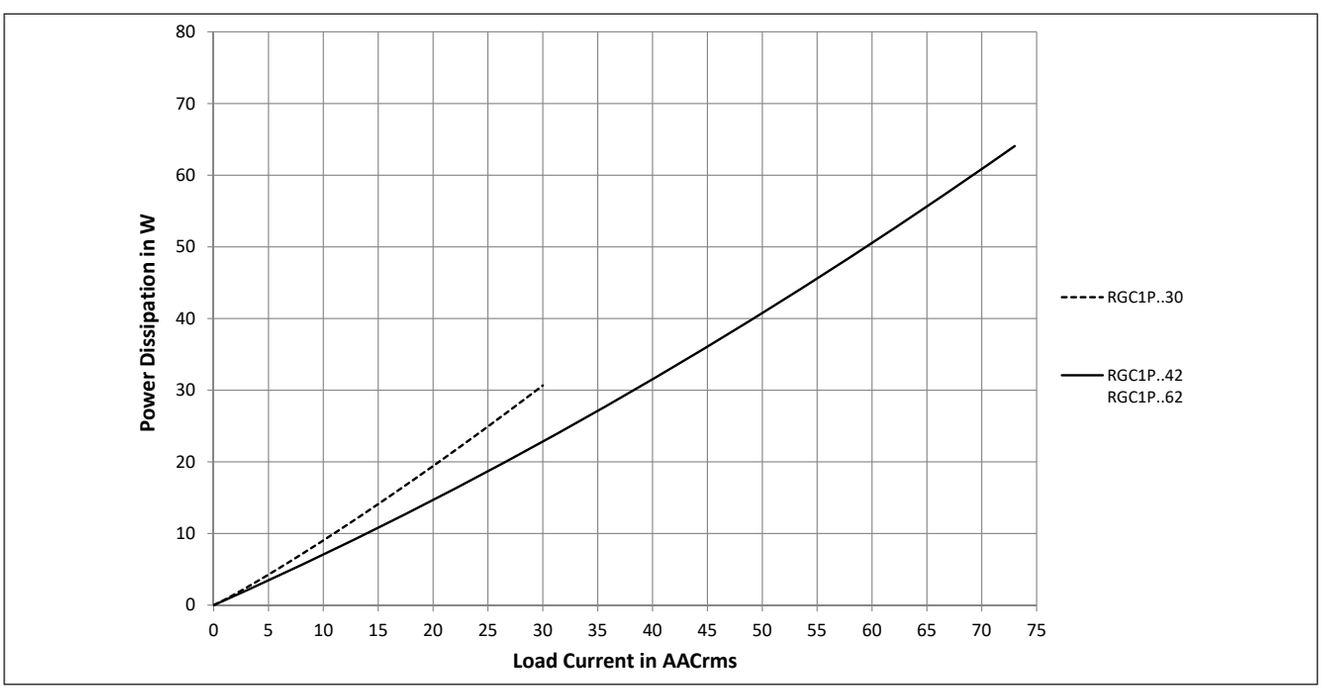

Current Derating (UL508)

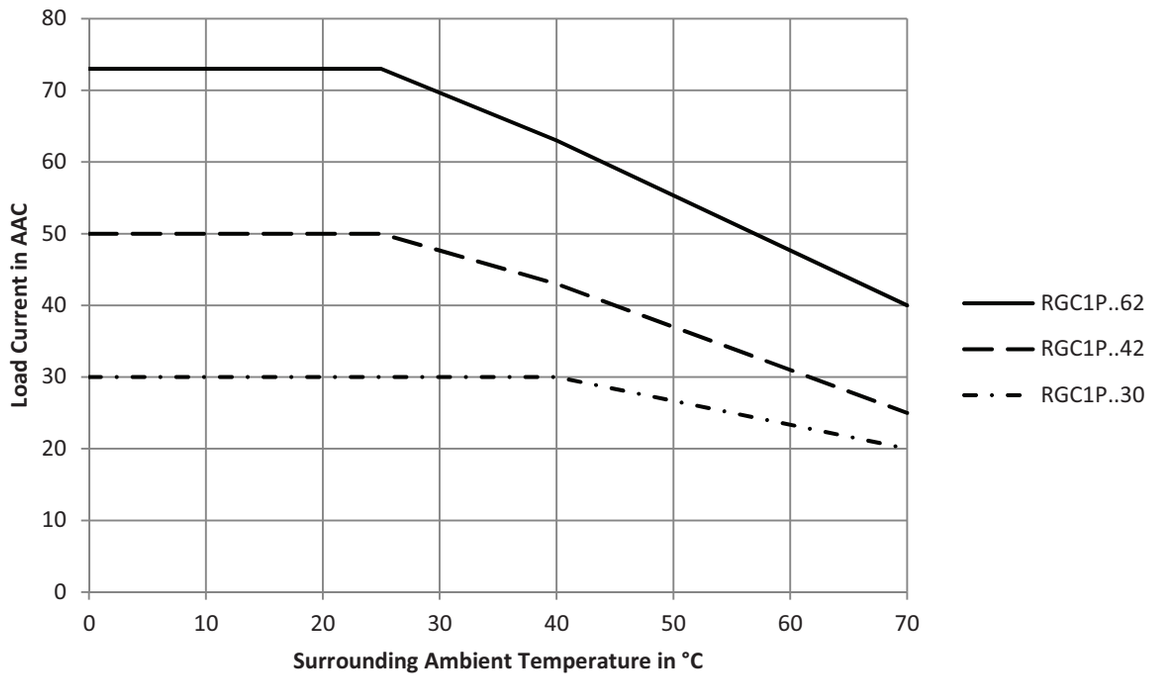

Current Derating vs. Spacing Curves

RGC1P..30

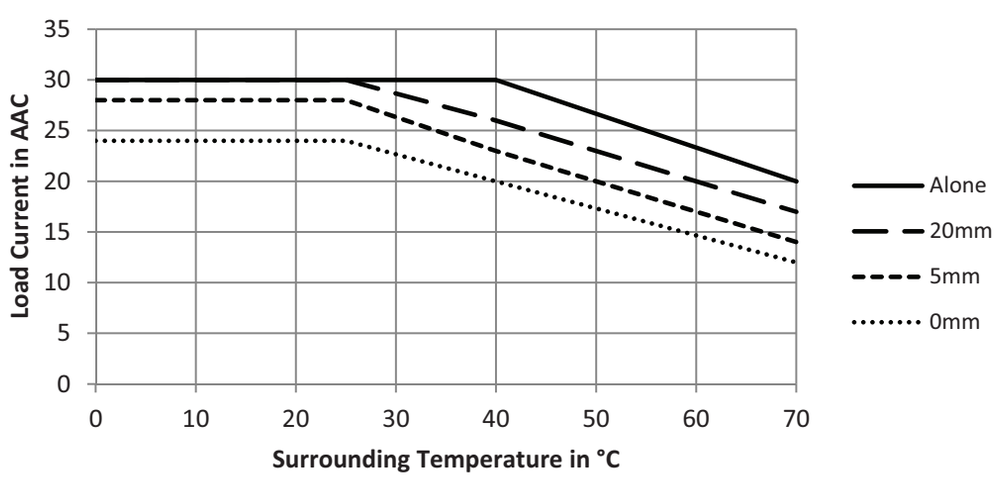

Current Derating vs. Spacing Curves

RGC1P..42

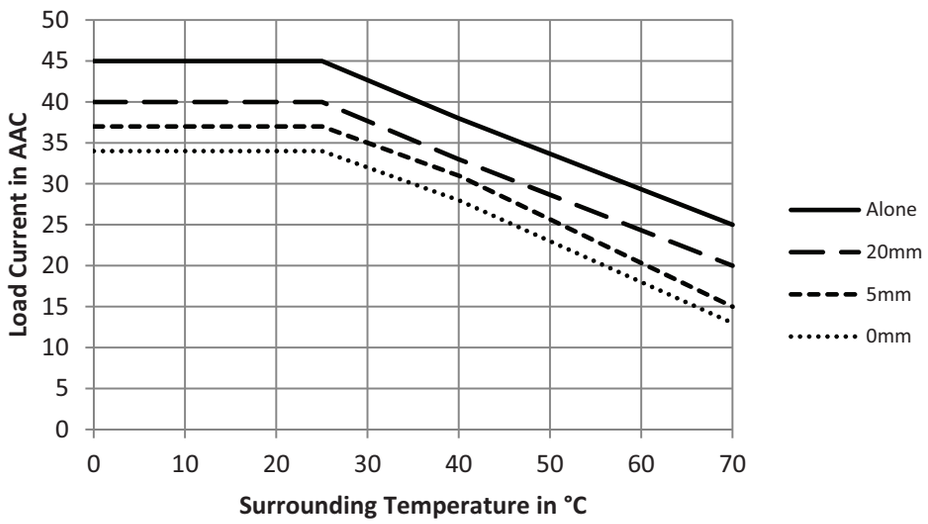

RGC1P..62

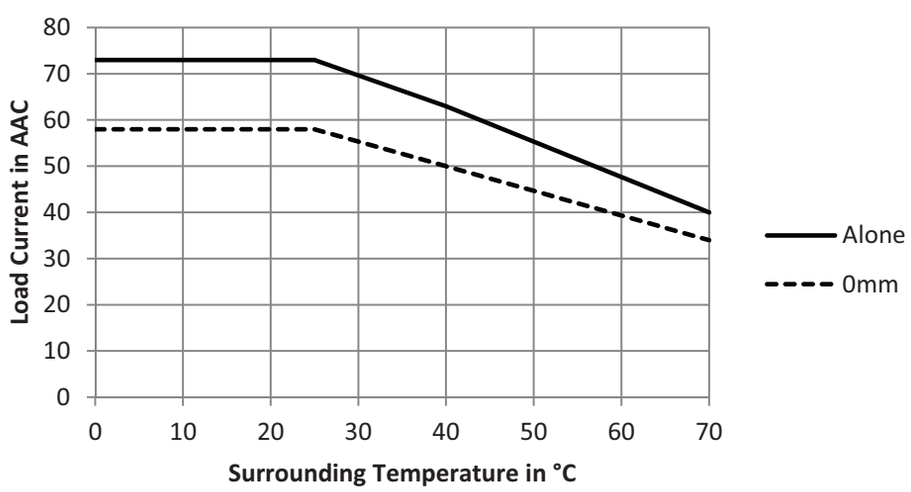

CARLO GAVAZZI

Environmental and Housing Specifications

Operating Temperature	-40°C to +70°C (-40°F to +158°F)
Storage Temperature	-40°C to +100°C (-40°F to +212°F)
EU RoHS compliant	Yes
China RoHS compliant	Refer to Environmental Information (page 15)
Impact resistance (EN50155, EN61373)	15/11 g/ms
Vibration resistance (2-100Hz, IEC60068-2-6, EN50155, EN61373)	2g per axis
Relative humidity	95% non-condensing @ 40°C
Material	PA66, RAL7035

UL flammability rating (for plastic)	UL 94 V0 Glow wire ignition temperature and Glow wire flammability index conform to EN 60335-1 requirements
Installation altitude	0-1000m. Above 1000m derate lineraly by 1% of FLC per 100m up to a maximum of 2000m
Weight	
RGC1P..30, 42	approx. 450g
RGC1P..62	approx. 805g

Product Interface

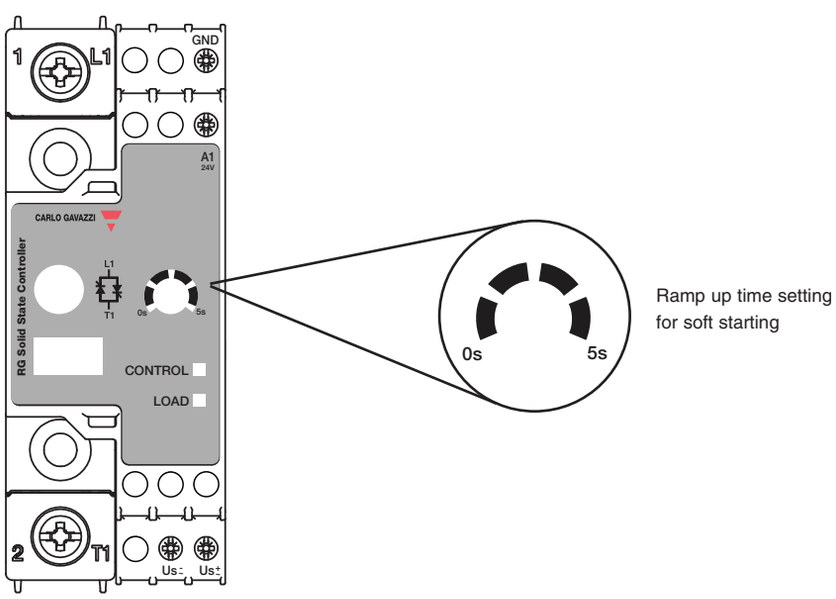

Terminals Labelling:

1/L1:	Line connection
2/T1:	Load connection
A1-GND:	Control input, 19.2 - 28.8 VDC
Us (+, ~):	External supply, positive signal or AC signal
Us (-, ~):	External supply, ground or AC signal

LED Indications

LED	Status	Timing Diagram
CONTROL (green)	Supply voltage (Us) ON	
	Control input ON	
	Mains loss	0.5s
	SSR internal error	0.5s, 3s
LOAD (yellow)	LOAD ON	

CARLO GAVAZZI

Agency Approvals and Conformances

Conformance	IEC/EN 60947-4-3	**Agency Approvals**	UL Listed: UL508, NMFT E172877 cUL Listed: CSA 22.2 No.14-13, NMFT7 E172877
		Short Circuit Current Rating	100kArms, UL508

Electromagnetic Compatibility

EMC Immunity	EN 60947-4-3	**Electrical fast transient (Burst) immunity**	EN/IEC 61000-4-4
Electrostatic discharge (ESD) immunity	EN/IEC 61000-4-2	Output: 2kV, 5 kHz	Performance Criteria 1
Air discharge, 8 kV	Performance Criteria 2	Us: 2kV, 5 kHz	Performance Criteria 1
Contact, 4 kV	Performance Criteria 2	A1, GND: 1 kV, 5 kHz	Performance Criteria 1
Electrical surge immunity	EN/IEC 61000-4-5	**Radiated radio frequency immunity**	EN/IEC 61000-4-3
Output, line to line, 1 kV	Performance Criteria 2	10V/m, 80 - 1000 MHz	Performance Criteria 1
Output, line to earth, 2 kV	Performance Criteria 2	10V/m, 1.4 - 2.0 GHz	Performance Criteria 1
A1, GND		3V/m, 2.0 - 2.7 GHz	Performance Criteria 1
Line to earth, 1 kV	Performance Criteria 2	**Conducted radio frequency immunity**	EN/IEC 61000-4-6
Us +, Us -		10V/m, 0.15 - 80 MHz	Performance Criteria 1
Line to line, 500 V	Performance Criteria 2	**Voltage Dips**	EN/IEC 61000-4-11
Line to earth, 500 V	Performance Criteria 2	0% for 0.5, 1 cycle	Performance Criteria 2
		40% for 10 cycles	Performance Criteria 2
		70% for 25 cycles	Performance Criteria 2
		80% for 250 cycles	Performance Criteria 2
		Voltage Interruptions	EN/IEC 61000-4-11
		0% for 5000 ms	Performance Criteria 2

EMC Emission	EN 60947-4-3	Radio interference field emission (radiated)	EN/IEC 55011
Radio interference voltage emission (conducted)	EN/IEC 55011	30 - 1000 MHz	Class A (industrial)
0.15 - 30 MHz	Class A (with external filtering)		

Note:
- Control input lines must be installed together to maintain products susceptibility to Radio Frequency Interference.
- Use of AC solid state relays may according to the application and the load current, cause conducted radio interferences. Use of mains filters may be necessary for cases where the user must meet E.M.C requirements. The filtering tables should be taken only as indications, the filter attenuation will depend on the final application.
- This product has been designed for Class A equipment. (External filtering may be required, refer to filtering section). Use of this product in domestic environments may cause radio interference, in which case the user may be required to employ additional mitigation methods.
- Surge tests on RGC..A models were carried out with the signal line impedence network. In case the line impedance is less than 40Ω, it is suggested that AC supply is provided through a secondary circuit where the short circuit limit between conductors and ground is 1500VA or less.
- A deviation of one step in the distributed full cycle models and up to 1.5% Full Scale Deviation in phase angle models is considered to be within PC1 criteria.

- Performance Criteria 1 (Performance Criteria A): No degradation of performance or loss of function is allowed when the product is operated as intended.
- Performance Criteria 2 (Performance Criteria B): During the test, degredation of performance or partial loss of function is allowed. However, when the test is complete the product should return operating as intended by itself.
- Performance Criteria 3 (Performance Criteria C): Temporary loss of function is allowed, provided the function can be restored by manual operation of the control.

CARLO GAVAZZI

Mode of Operation

Soft starting is utilised to reduce the start-up current of loads having a high cold to hot resistance ratio such as short wave infrared heaters. The thyristor firing angle is gradually increased over a time period of maximum 5 seconds (settable through an accessible potentiometer) in order to apply the voltage (and current) to the load smoothly.

Soft starting is perfomed only on the first power up and when the control voltage has been missing in the preceeding 5 seconds. If soft start is stopped before soft start completion, it is assumed that a start was peformed and the period count for missing control voltage starts as soon as the soft start is stopped.

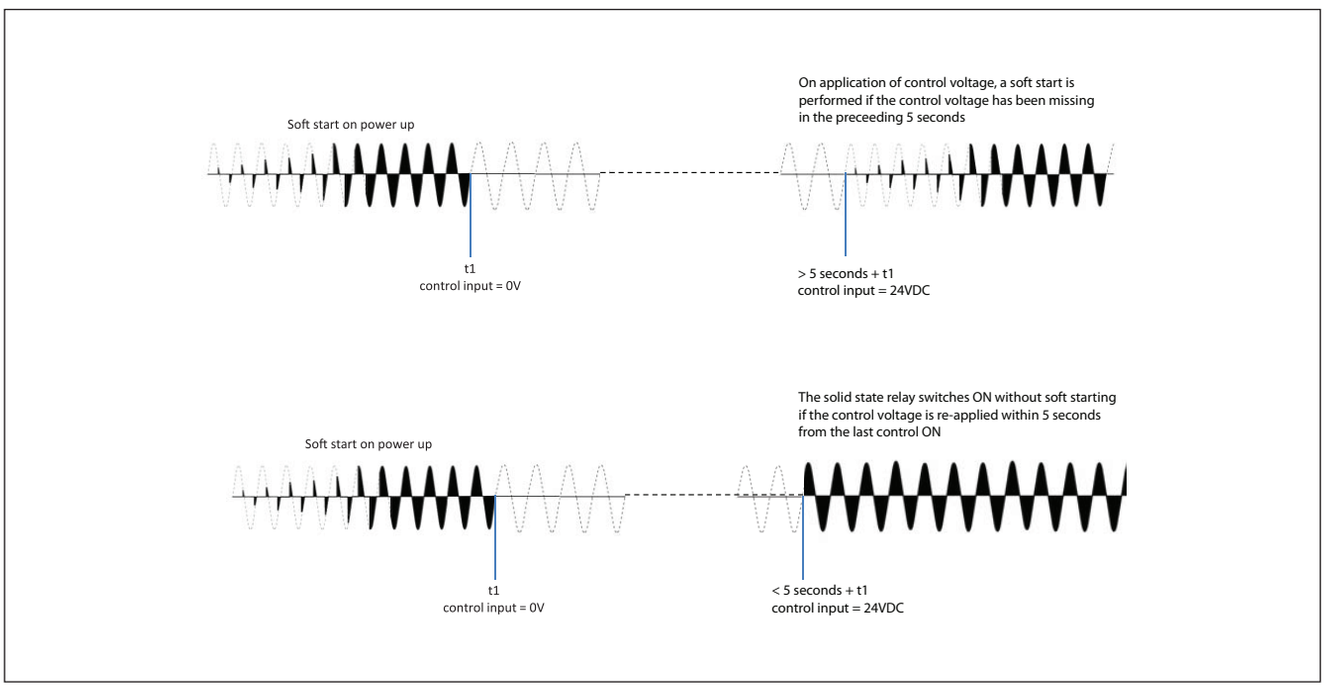

CARLO GAVAZZI

Dimensions

RGC1P..30

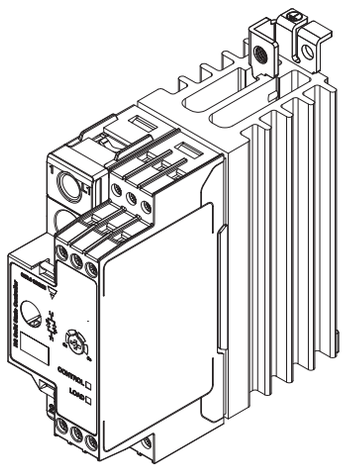

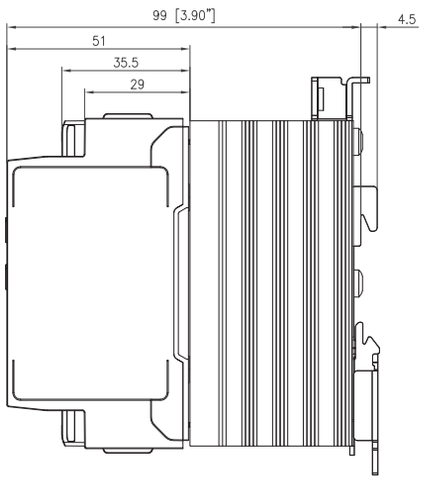

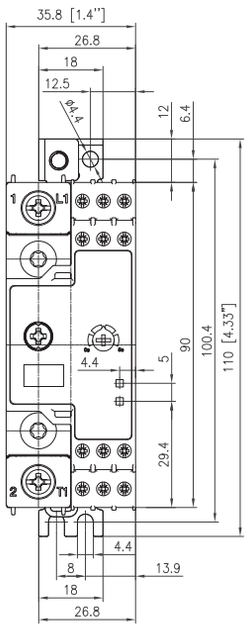

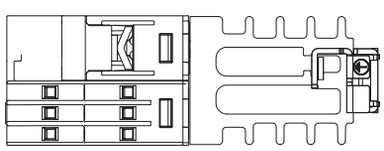

Note: The indicated depth dimension of the RGx1P has to be increased by 3mm when the tamper proof cover accessory is mounted on the device.

Housing width tolerance +0.5mm, -0mm…as per DIN43880.
All other tolerances ± 0.5mm.
All dimensions in mm.

RGC1P..42

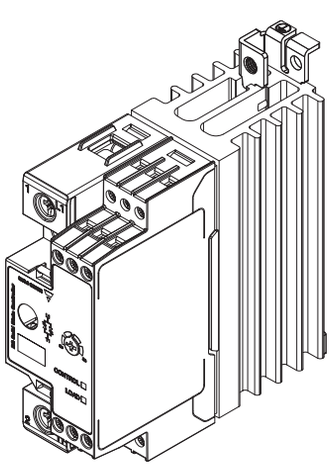

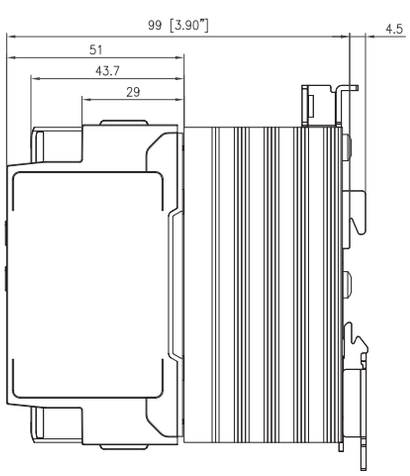

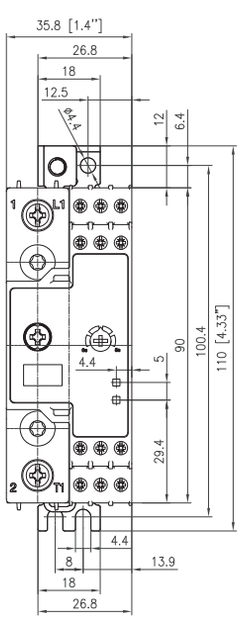

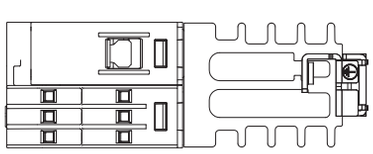

Note: The indicated depth dimension of the RGx1P has to be increased by 3mm when the tamper proof cover accessory is mounted on the device.

Housing width tolerance +0.5mm, -0mm…as per DIN43880.
All other tolerances ± 0.5mm.
All dimensions in mm.

CARLO GAVAZZI

Dimensions

RGC1P..62

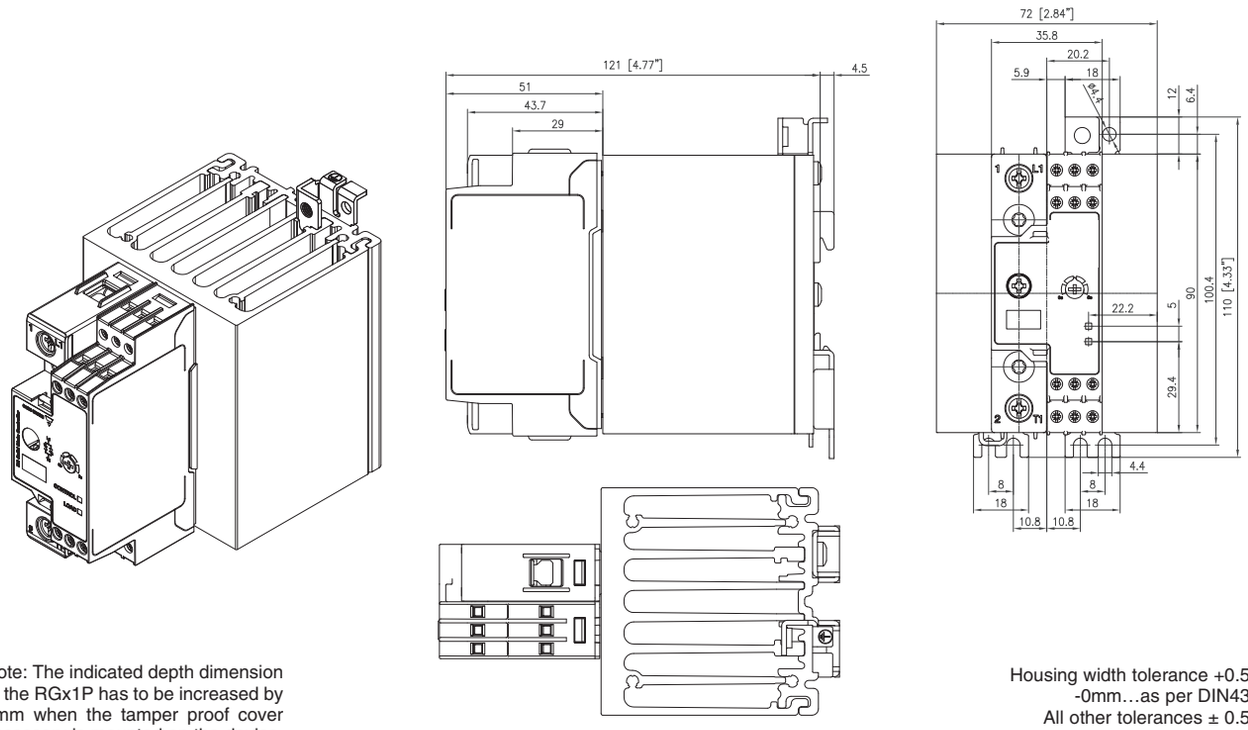

Note: The indicated depth dimension of the RGx1P has to be increased by 3mm when the tamper proof cover accessory is mounted on the device.

Housing width tolerance +0.5mm, -0mm…as per DIN43880.
All other tolerances ± 0.5mm.
All dimensions in mm.

Connection Diagram

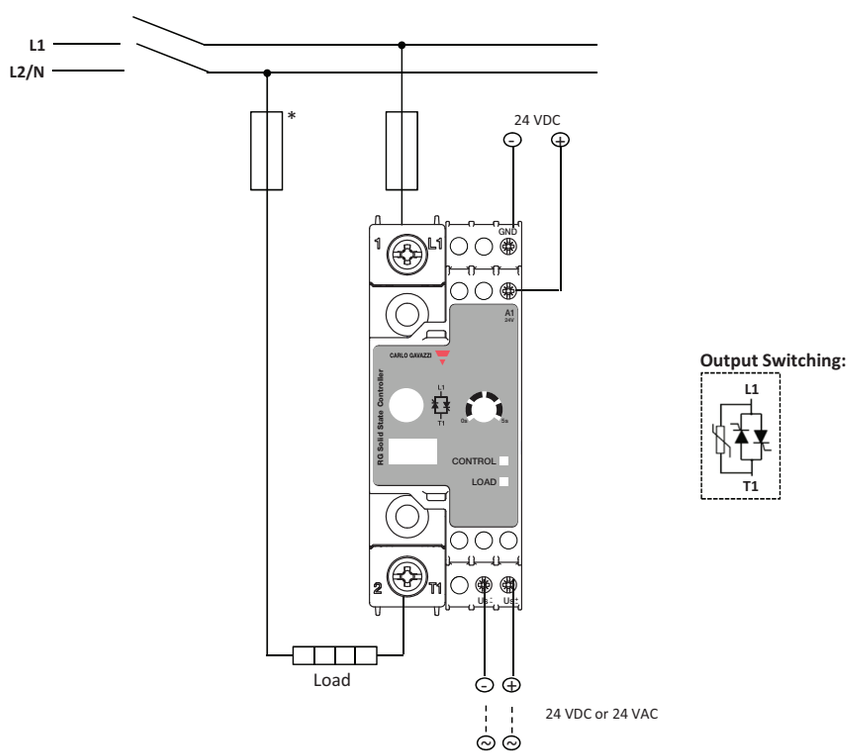

* depends on system requirements

CARLO GAVAZZI

Connection Specifications

POWER CONNECTIONS	1/L1, 2/T1		
Use 75°C copper (Cu) conductors	RGC1P..30		RGC1P..42, RGC1P..62
	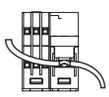		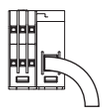
Stripping length (X)	12mm		11mm
Connection type	M4 screw with captivated washer		M5 screw with box clamp
Rigid (solid & stranded) UL/cUL rated data 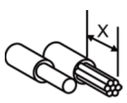	2x 2.5 - 6.0 mm^2 2x 14 - 10 AWG	1x 2.5 - 6.0 mm^2 1x 14 - 10 AWG	1x 2.5 - 25 mm^2 1x 14 - 3 AWG
Flexible with end sleeve	2x 1.0 - 2.5 mm^2 2x 2.5 - 4.0 mm^2 2x 18 - 14 AWG	1x 1.0 - 4.0 mm^2 1x 18 - 12 AWG	1x 2.5 - 16 mm^2 1x 14 - 6 AWG
Flexible without end sleeve	2x 1.0 - 2.5 mm^2 2x 2.5 - 6.0 mm^2 2x 18 - 14 AWG	1x 1.0 - 6.0 mm^2 1x 18 - 10 AWG	1x 4.0 - 25 mm^2 1x 12 - 3 AWG
Torque specification	Pozidriv 2 UL: 2Nm (17.7 lb-in) IEC: 1.5-2.0Nm (13.3-17.7 lb-in)		Pozidriv 2 UL: 2.5Nm (22 lb-in) IEC: 2.5-3.0Nm (22-26.6 lb-in)
Aperture for termination lug	12.3mm		n/a
Protective Earth (PE) connection 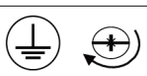	M5, 1.5Nm (13.3 lb-in) Not provided with SSR. PE connection required when product is intended to be used in Class 1 applications according to EN/IEC 61140		

CONTROL CONNECTIONS	
Use 60/75°C copper (Cu) conductors	GND, A1, Us 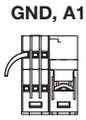
Stripping length (X)	8 mm
Connection type	M3 screw with box clamp
Rigid (solid & stranded) UL/cUL rated data 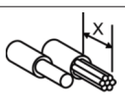	1x 1.0 - 2.5 mm^2 1x 18 - 12 AWG
Flexible with end sleeve	1x 0.5 - 2.5 mm^2 1x 20 - 12 AWG
Torque specification	Pozidriv 1 UL: 0.5Nm (4.4 lb-in) IEC: 0.4-0.5Nm (3.5-4.4 lb-in)

Mounting Instructions

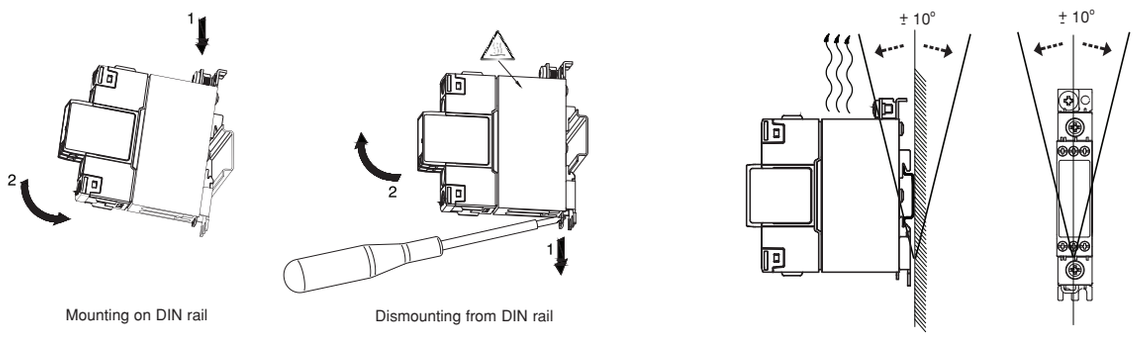

Installation Instructions

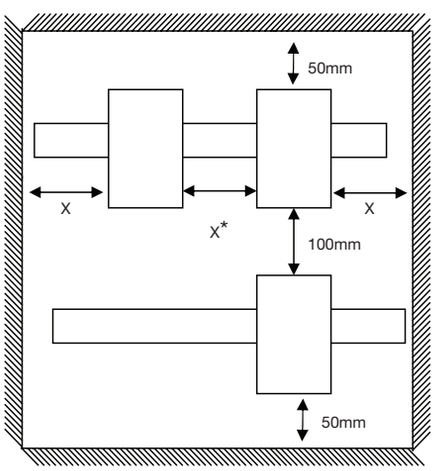

* Refer to Current Derating vs spacing curves. Spacing between SSR and panel walls should be >5mm.

CARLO GAVAZZI

Short Circuit Protection

Protection Co-ordination, Type 1 vs Type 2:

Type 1 protection implies that after a short circuit, the device under test will no longer be in a functioning state. In type 2 co-ordination the device under test will still be functional after the short circuit. In both cases, however the short circuit has to be interrupted. The fuse between enclosure and supply shall not open. The door or cover of the enclosure shall not be blown open. There shall be no damage to conductors or terminals and the conductors shall not separate from terminals. There shall be no breakage or cracking of insulating bases to the extent that the integrity of the mounting of live parts is impaired. Discharge of parts or any risk of fire shall not occur.

The product variants listed in the table hereunder are suitable for use on a circuit capable of delivering not more than 100,000A Symmetrical Amperes, 600Volts maximum when protected by fuses. Tests at 100,000Arms were performed with Class J fuses, fast acting; please refer to the tables below for maximum ratings.Tests with Class J fuses are representative of Class CC fuses.

Co-ordination type 1 (UL508)

Part No.	Short circuit current [kArms]	Max. fuse size [A]	Class	Voltage [VAC]
RGC1P..30	100	30	J or CC	Max. 600
RGC1P..42	100	80	J	Max. 600
RGC1P..62	100	80	J	Max. 600

Co-ordination type 2 (EN/IEC 60947-4-3)

Part No.	Short circuit current [kArms]	Ferraz Shawmut (Mersen)		Siba		Voltage [VAC]
		Max. fuse size [A]	Part No.	Max. fuse size [A]	Part No.	
RGC1P..30	10	40	6.9xx CP GRC 22x58 /40	32	50 142 06.32	Max. 600
	100	40	6.9xx CP URD 22x58 /40	32	50 142 06.32	Max. 600
RGC1P..42	10	63	6.9xx CP URC 14x51 /63	80	50 142 20.80	Max. 600
	10	70	A70QS70-4	80	50 142 20.80	Max. 600
	100	63	6.9xx CP URC 14x51 /63	80	50 142 20.80	Max. 600
	100	70	A70QS70-4	80	50 142 20.80	Max. 600
RGC1P..62	10	100	6.9xx CP GRC 22x58 /100	100	50 142 20.100	Max. 600
	10	100	A70QS100-4	100	50 142 20.100	Max. 600
	100	100	6.621 CP URGD 27x60 /100	100	50 142 20.100	Max. 600
	100	100	A70QS100-4	100	50 142 20.100	Max. 600

xx = 00, without fuse trip indication
xx = 21, with fuse trip indication

CARLO GAVAZZI

Type 2 Protection with Miniature Circuit Breakers (M.C.B.s)

Solid State Relay type	ABB Model no. for Z - type M. C. B. (rated current)	ABB Model no. for B - type M. C. B. (rated current)	Wire cross sectional area [mm²]	Minimum length of Cu wire conductor [m][6]
RGC1P..30 (1800 A²s)	**1 pole**			
	S201 - Z10 (10A)	S201-B4 (4A)	1.0	7.6
			1.5	11.4
			2.5	19.0
	S201 - Z16 (16A)	S201-B6 (6A)	1.0	5.2
			1.5	7.8
			2.5	13.0
			4.0	20.8
	S201 - Z20 (20A)	S201-B10 (10A)	1.5	12.6
			2.5	21.0
	S201 - Z25 (25A)	S201-B13 (13A)	2.5	25.0
			4.0	40.0
	2 pole			
	S202 - Z25 (25A)	S202-B13 (13A)	2.5	19.0
			4.0	30.4
RGC1P..42 RGC1P..62 (18000 A²s)	**1 pole**			
	S201-Z32 (32A)	S201-B16 (16A)	2.5	3.0
			4.0	4.8
			6.0	7.2
	S201-Z50 (50A)	S201-B25 (25A)	4.0	4.8
			6.0	7.2
			10.0	12.0
			16.0	19.2
	S201-Z63 (63A)	S201-B32 (32A)	6.0	7.2
			10.0	12.0
			16.0	19.2

6. Between MCB and Load (including return path which goes back to the mains).

Note: A prospective current of 6kA and a 230/400V power supply system is assumed for the above suggested specifications. For cables with different cross section than those mentioned above please consult Carlo Gavazzi's Technical Support Group.

CARLO GAVAZZI

Environmental Information

The declaration in this section is prepared in compliance with People's Republic of China Electronic Industry Standard SJ/T11364-2014: Marking for the Restricted Use of Hazardous Substances in Electronic and Electrical Products.

Part Name	Toxic or Harardous Substances and Elements					
	Lead (Pb)	Mercury (Hg)	Cadmium (Cd)	Hexavalent Chromium (Cr(VI))	Polybrominated biphenyls (PBB)	Polybrominated diphenyl ethers (PBDE)
Power Unit Assembly	x	O	O	O	O	O

O: Indicates that said hazardous substance contained in homogeneous materials fot this part are below the limit requirement of GB/T 26572.

X: Indicates that said hazardous substance contained in one of the homogeneous materials used for this part is above the limit requirement of GB/T 26572.

环境特性

这份申明根据中华人民共和国电子工业标准
SJ/T11364-2014：标注在电子电气产品中限定使用的有害物质

零件名称	有毒或有害物质与元素					
	铅 (Pb)	汞 (Hg)	镉 (Cd)	六价铬 (Cr(VI))	多溴化联苯 (PBB)	多溴联苯醚 (PBDE)
功率单元	x	O	O	O	O	O

O:此零件所有材料中含有的该有害物低于GB/T 26572的限定。

X: 此零件某种材料中含有的该有害物高于GB/T 26572的限定。

CARLO GAVAZZI

Accessories

Tamper Proof Accessory Kit

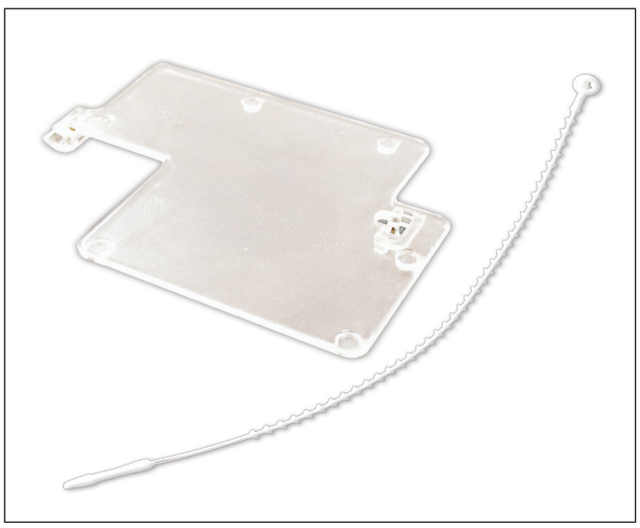

Ordering Key

RGTMP

Tamper proof accessory kit for RGS1P, RGC1P series containing:
- x5 transparent covers
- x5 secureness ties

Installation

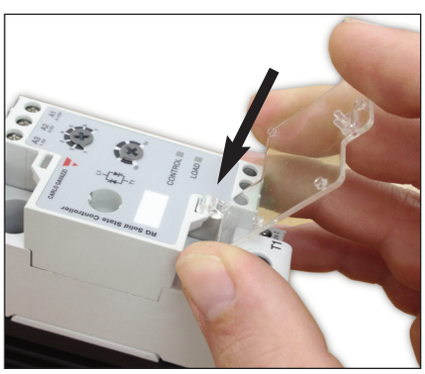

1: Clip hook of the transparent cover to the bottom loop of the RGx1P control module

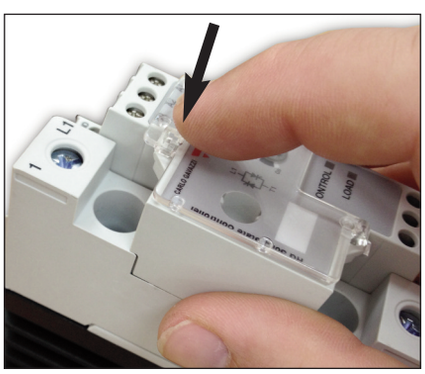

2: Close the cover by clipping to the top loop of the RGx1P control module

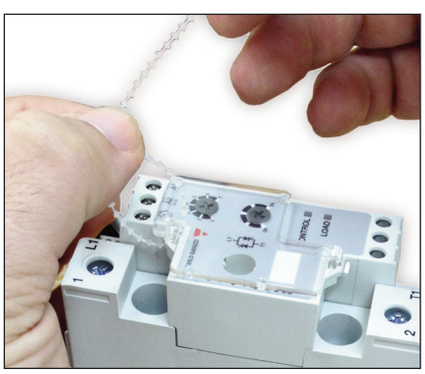

3: Secure with provided tie

Specifications are subject to change without notice (05.04.2018)