RGC

1-Phase Solid State Contactors, ‘E’- type connection

Description

This slimline range of solid state contactors is an evolution of solid state switches for which Carlo Gavazzi is very well known. The RG solid state contactors present a unique opportunity for panel space savings thanks to their very slim footprint.

The **RGC** is the ready-to-use range that is provided with an integrated heatsink. The smallest footprint occupies only a width of 17.5 mm with ratings up to 37 AAC. The power and control teminals allow for safe looping of cables. Spring-loaded pluggable control terminals are an option when faster installation time is required.

The RGC output is protected against overvoltages by means of an integrated varistor. Control ON indication is provided through a green LED.

Specifications are at a surrounding temperature of 25°C unless otherwise specified.

Benefits

- **Panel space savings.** The slimmest product in the range accomodates up to 37 AAC in a width of only 17.5 mm giving 25% space saving per SSR compared to 22.5 mm solutions.
- **Less maintenance costs.** Wire bonding technology reduces thermal and mechanical stresses of the output chips resulting in a larger number of operational cycles compared to other assembly technologies.
- **Low machine downtime.** Integrated overvoltage protection prevents the solid state relay from breaking down due to uncontrolled transients that may occur on the lines.
- **Ease of use.** The RGC ready-to-use solution is provided with integrated heatsink thus eliminating the need for the user to calculate the size of heatsink needed for adequate thermal dissipation.
- **Cost effective protection co-ordination**. The high I^2t specification permits easy Type 2 protection co-ordination with B-type Minitaure Circuit Breakers.
- **Fast wiring**. Power connections for models rated ≥37 A are equipped with terminals that can handle cables up to 25 mm^2 / AWG3 cables. Spring loaded control terminals are also available that help reduce installation time.
- **Accommodates UL508A requirements for Industrial Control Panels.** The RGC is certified as a listed product. All models carry a 100 kArms Short Circuit Current Rating.
- **Protection against SSR overheat.** Optional feature with integrated over temperature protection protects the RGC output from getting damaged in case of overheating. This feature is present by default on the variants with integrated fan and optional on other variants.

Applications

Plastic injection machines, Extrusion machines, Blow moulding machines, Thermoformers, Dryers, Electrical ovens, Fryers, Shrink tunnels, Air handling units, Sterilisation equipment, Climatic chambers, Ovens and furnaces, Ambient heating.

Main features

- Ratings up to 660 VAC, 85 A @ T_A 40°C
- Up to 18000 A^2s for I^2t for protection coordination with M.C.Bs
- 100kA short circuit current rating according to UL508
- Conformance to Railway standards

Order code

RGC1 □□□□□□E□

Enter the code option instead of □. Refer to the selection guide section for valid part numbers.

Code	Option	Description	Comments
R	-	Solid State Relay (RG)	
G	-		
C	-	With integrated heatsink	
1	-	1-pole switching	
□	A	Zero Cross switching (ZC)	
	B	Instant ON switching (IO)	
□	23	Rated voltage: 24-264 VAC, 800 Vp	
	60	Rated voltage: 42-660 VAC, 1200 Vp	
□	D	Control voltage: 3-32 VDC	4-32 VDC for 600 VAC version
	A	Control voltage: 20-275 VAC, 24-190 VDC	
□	15	Rated current: 20 AAC (525 A²s)	17.5 mm wide, low depth
	20	Rated current: 23 AAC (525 A²s)	17.5 mm wide
	25	Rated current: 25 AAC (1800 A²s)	17.5 mm wide, low depth
	30	Rated current: 30 AAC (1800 A²s)	22.5 mm wide
	32	Rated current: 30 AAC (18000 A²s)	17.5 mm wide, low depth
	32	Rated current: 37 AAC (18000 A²s)	17.5 mm wide, low depth - only with box clamp power terminals
	40	Rated current: 40 AAC (3200 A²s)	35 mm wide
	42	Rated current: 43 AAC (18000 A²s)	35 mm wide
	60	Rated current: 60 AAC (3200 A²s)	70 mm wide
	62	Rated current: 65 AAC (18000 A²s)	70 mm wide
□	K	Screw connection for control terminals	
	M	Pluggable spring-loaded connection for control terminals	
□	K	Screw connection for power terminals	Applicable only for: RGC..15, 20, 25, 30, 32
□	G	Box clamp connection for power terminals	Applicable only to: RGC..32, 40, 42, 60, 62
E	-	Contactor configuration	
□	-		Single packaging
	X20	Bulk packaging of 20 pcs.	Applicable only to: RGC..15, 25, 32

Refer to page 3 for the Order Code of the RGC with integrated Over Temperature Protection

Order code - integrated Over Temperature Protection

RGC1A60 □ □ G □ EP

Enter the code option instead of □. Refer to selection guide section for valid part numbers.

Code	Option	Description	Comments
R	-	Solid State Relay (RG)	
G	-		
C	-	With integrated heatsink	
1	-	1-pole switching	
A	-	Zero Cross switching (ZC)	
60	-	Rated voltage: 42-660 VAC, 1200 Vp	
□	D	Control voltage: 5-32 VDC	
	A	Control voltage: 20-275 VAC, 24-190 VDC	
□	30	Rated current: 30 AAC (1800 A²s)	22.5 mm wide
	42	Rated current: 43 AAC (18000 A²s)	35 mm wide
	62	Rated current: 65 AAC (18000 A²s)	70 mm wide
	90	Rated current: 85 AAC (6600 A²s)	70 mm wide with fan
	92	Rated current: 85 AAC (18000 A²s)	70 mm wide with fan
G	-	Box clamp connection for control terminals	
	K	Screw connection for power terminals	Applicable only for: RGC..30..P
	G	Box clamp connection for power terminals	
E	-	Contactor configuration	
P	-	Integrated Over Temperature Protection	

Selection guide

For 17.5 mm wide variants having low depth heatsink:

Rated voltage, Switching mode	Control voltage	Rated operational current @ 40°C			
		20 AAC (525 A²s)	25 AAC (1800 A²s)	30 AAC (18000 A²s)	37 AAC (18000 A²s)
		Product width			
		17.5 mm, low depth	17.5 mm, low depth	17.5 mm, low depth	17.5 mm, low depth
230 VAC, ZC	3 - 32 VDC	RGC1A23D15KKE RGC1A23D15MKE	RGC1A23D25KKE RGC1A23D25MKE	-	-
	20-275 VAC, 24-190 VDC	RGC1A23A15KKE RGC1A23A15MKE	RGC1A23A25KKE RGC1A23A25MKE	-	-
600 VAC, ZC	4- 32 VDC	RGC1A60D15KKE RGC1A60D15MKE	RGC1A60D25KKE RGC1A60D25MKE	RGC1A60D32KKE RGC1A60D32MKE	RGC1A60D32KGE RGC1A60D32MGE
	20-275 VAC, 24-190 VDC	RGC1A60A15KKE RGC1A60A15MKE	RGC1A60A25KKE RGC1A60A25MKE	-	-
600 VAC, IO	4- 32 VDC	RGC1B60D15KKE	RGC1B60D25KKE	-	-

For 17.5 mm wide and 22.5 mm wide variants:

Rated voltage, Switching mode	Control voltage	Rated operational current @ 40°C			
		23 AAC (525 A²s)	30 AAC (1800 A²s)	-	-
		Product width			
		17.5 mm	22.5 mm	-	
230 VAC, ZC	3 - 32 VDC	RGC1A23D20KKE RGC1A23D20MKE	RGC1A23D30KKE RGC1A23D30MKE	-	-
	20-275 VAC, 24-190 VDC	RGC1A23A20KKE RGC1A23A20KKE	RGC1A23A30KKE RGC1A23A30MKE	-	-
600 VAC, ZC	4- 32 VDC	RGC1A60D20KKE RGC1A60D20MKE	RGC1A60D30KKE RGC1A60D30MKE	-	-
	20-275 VAC, 24-190 VDC	RGC1A60A20KKE RGC1A60A20MKE	RGC1A60A30KKE RGC1A60A30MKE	-	-
600 VAC, IO	4- 32 VDC	RGC1B60D20KKE	RGC1B60D30KKE	-	-

For 35 mm wide and 70 mm wide variants:

Rated voltage, Switching mode	Control voltage	Rated operational current @ 40°C			
		40 AAC (3200 A²s)	43 AAC (18000 A²s)	60 AAC (3200 A²s)	65 AAC (18000 A²s)
		Product width			
		35 mm	35 mm	70 mm	70 mm
230 VAC, ZC	3 - 32 VDC	RGC1A23D40KGE	RGC1A23D42KGE	RGC1A23D60KGE	RGC1A23D62KGE
	20-275 VAC, 24-190 VDC	RGC1A23A40KGE	RGC1A23A42KGE	RGC1A23A60KGE	RGC1A23A62KGE
600 VAC, ZC	4- 32 VDC	RGC1A60D40KGE RGC1A60D40MGE	RGC1A60D42KGE RGC1A60D42MGE	RGC1A60D60KGE -	RGC1A60D62KGE RGC1A60D62MGE
	20-275 VAC, 24-190 VDC	RGC1A60A40KGE RGC1A60A40MGE	RGC1A60A42KGE RGC1A60A42MGE	RGC1A60A60KGE -	RGC1A60A62KGE RGC1A60A62MGE
600 VAC, IO	4- 32 VDC	RGC1B60D40KGE	RGC1B60D42KGE	RGC1B60D60KGE	RGC1B60D62KGE

KKE: input terminals = screw output terminals = screw
KGE: input terminals = screw output terminals = box clamp
MKE: input terminals = pluggable spring output terminals = screw
MGE: input terminals = pluggable spring output terminals = box clamp

Selection guide - continued

For variants with integrated Over Temperature Protection:

Rated voltage, Switching mode	Control voltage	Rated operational current @ 40°C				
		30 AAC (1800 A²s)	43 AAC (18000 A²s)	65 AAC (18000 A²s)	85 AAC (6600 A²s)	85 AAC (18000 A²s)
		Product width				
		22.5 mm	35 mm	70 mm	70 mm + fan	70 mm + fan
600 VAC, ZC	5 - 32 VDC	RGC1A60D30GKEP	RGC1A60D42GGEP	RGC1A60D62GGEP	RGC1A60D90GGEP	RGC1A60D92GGEP
	20-275 VAC, 24-190 VDC	RGC1A60A30GKEP	RGC1A60A42GGEP	RGC1A60A62GGEP	RGC1A60A90GGEP	RGC1A60A92GGEP

GKEP: input terminals = box clamp output terminals = screw
GGEP: input terminals = box clamp output terminals = box clamp

For variants with bulk packaging of 20 pcs.

Rated voltage, Switching mode	Control voltage	Rated operational current @ 40°C			
		20 AAC (525 A²s)	25 AAC (1800 A²s)	-	-
		Product width			
		17.5 mm, low depth	17.5 mm, low depth	-	-
230 VAC, ZC	3 - 32 VDC	-	RGC1A23D25KKEX20	-	-
	20-275 VAC, 24-190 VDC	-	-	-	-
600 VAC, ZC	4 - 32 VDC	-	RGC1A60D25KKEX20	-	-
	20-275 VAC, 24-190 VDC	RGC1A60A15KKEX20	RGC1A60A25KKEX20	-	-

Carlo Gavazzi compatible components

Description	Component code	Notes
Control Plugs	RGM25	Pack of 10 spring loaded control plugs

Carlo Gavazzi further reading

Information	Where to find it	Notes
Datasheet	https://gavazziautomation.com/images/PIM/DATASHEET/ENG/rgc_u.pdf	Solid state contactor, RGC with 'U' - type configuration
Datasheet	https://gavazziautomation.com/images/PIM/DATASHEET/ENG/rgs.pdf	Solid state relay, RGS series without integrated heatsink

Structure

RGC..KKE

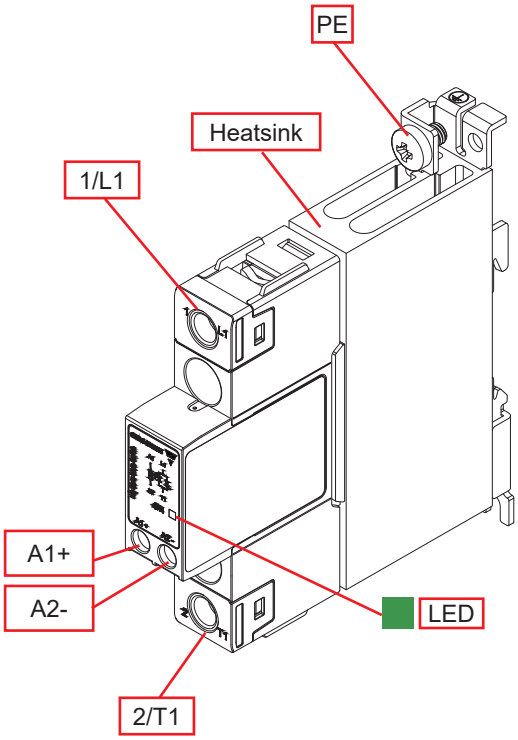

RGC..KGE

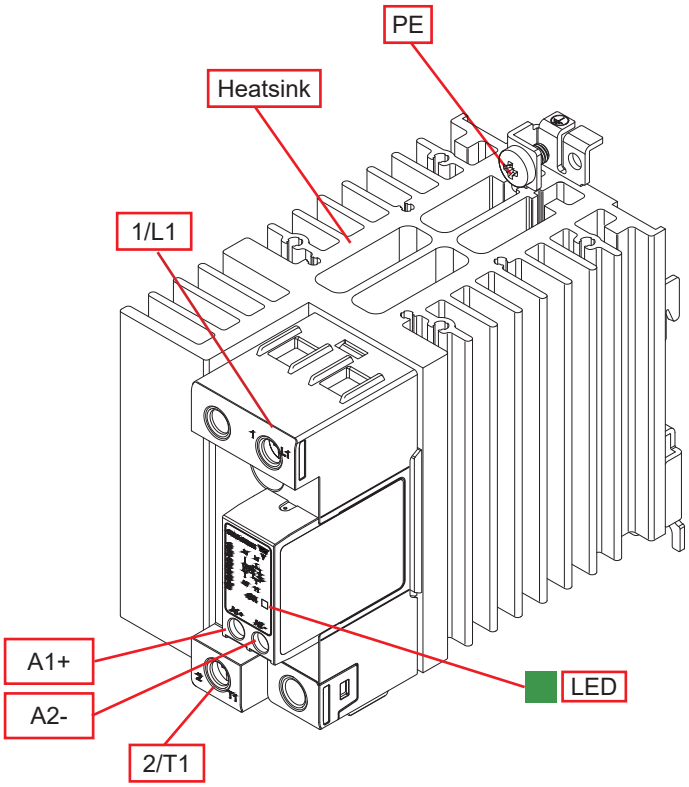

Element	Component	Function
1/L1	Power connection	Mains connection
2/T1	Power connection	Load connection
A1+, A2-	Control connection	Terminals for control voltage
LED	ON indicator	Indicates presence of control voltage
Heatsink	Integrated heatsink	DIN rail mounting (panel mounting also possible)
PE	Protective Earth	Connection for Protective Earth, PE screw not provided with RGC

Structure

RGC...30GKEP

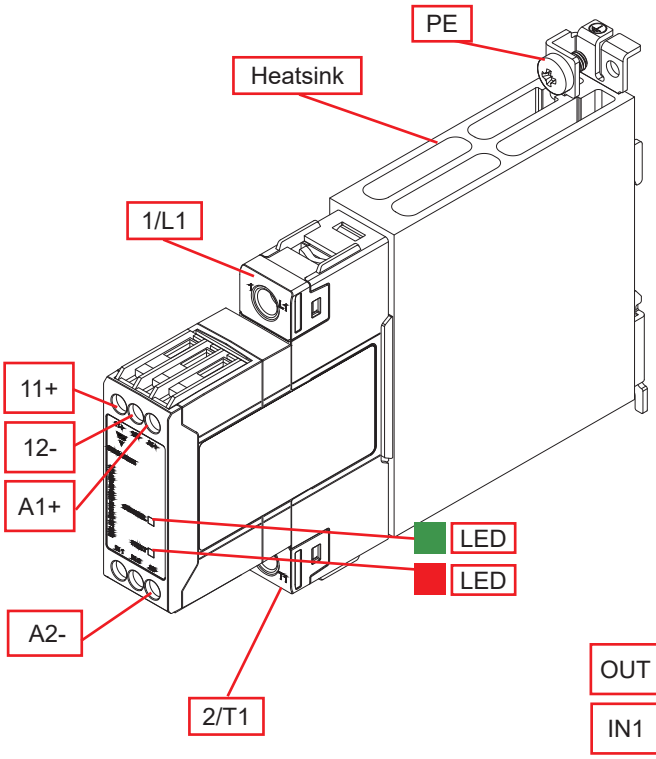

RGC...D9xGGEP*

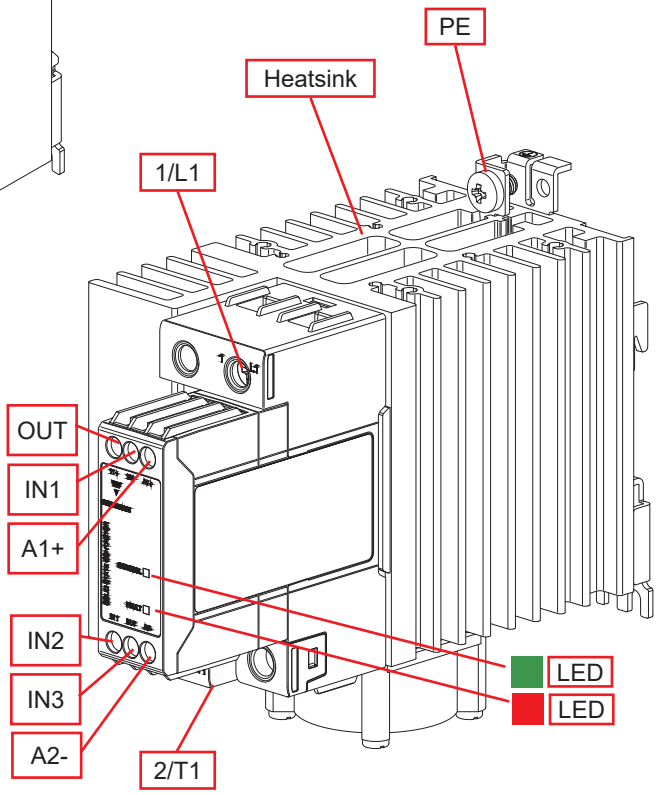

Element	Component	Function
1/L1	Power connection	Mains connection
2/T1	Power connection	Load connection
A1+, A2-	Control connection	Terminals for control voltage (Supply voltage for RGC..D9xGGEP)
IN1	Control connection	Terminals for control voltage (Only for RGC..D9xGGEP)
11+, 12-, OUT	Alarm output	Alarm output signal, Normally closed (OUT only for RGC..D9xGGEP)
IN2, IN3	Fan supply connection	Terminals for fan supply
LED, Green	CONTROL indicator	Indicates presence of control voltage
LED, Red	FAULT indicator	Indicates presence of an over temperature fault
Heatsink	Integrated heatsink	DIN rail mounting (panel mounting also possible)
PE	Protective Earth	Connection for Protective Earth, PE screw not provided with RGC

* Refer to Terminal layout section for terminal labelling reference of RGC..A9xGGEP

Features

General data

Material	PA66 or PA6 (UL94 V0), RAL7035 Glow wire ignition temperature and Glow wire flammability index conform to EN 60335-1 requirements	
Mounting	DIN rail (panel mount also possible)	
Touch Protection	IP20	
Overvoltage Category	III, 6 kV (1.2/50 µs) rated impulse withstand voltage	
Isolation	Input and Output to Case: Input to Output: Input to FAN/ Alarm Output:	4000 Vrms 4000 Vrms, 2500 Vrms for RGC..D..P 2500 Vrms applicable only to RGC..A..P
Weight	RGC..15, RGC..25, RGC..32: RGC..20: RGC..32xGE: RGC..30 / P: RGC..4x / P: RGC..6x / P: RGC..9xP	approx. 260 g approx. 315 g approx. 269 g approx. 375 g / 412 g approx. 515 g / 581 g approx. 972 g / 1020 g approx. 1100 g

Performance

Output specifications

	RGC..15..	RGC..20..	RGC..25..	RGC..30..	RGC..32..KE	RGC..32..GE
Max. operational current[1]: AC-51 @ Ta=25°C	20 AAC	25.5 AAC	30 AAC	30 AAC	30 AAC	43 AAC
Max. operational current[1]: AC-51 @ Ta=40°C	20 AAC	23 AAC	25 AAC	30 AAC	30 AAC	37 AAC
Max. operational current[1]: AC-53a @ Ta=40°C	5 AAC	5 AAC	5 AAC	8 AAC	5 AAC	5 AAC
Operational frequency range	45 to 65 Hz					
Output protection	Integrated varistor					
Leakage current @ rated voltage	<3 mAAC					
Minimum operational current	150 mAAC	150 mAAC	250 mAAC	250 mAAC	500 mAAC	500 mAAC
Repetitive overload current (Motor rating) UL508: Ta=40°C, t_{ON}=1 s, t_{OFF}=9 s, 50 cycles	51 AAC	60 AAC	51 AAC	84 AAC	51 AAC	51 AAC
Non-repetitive surge current (I_{TSM}), t=10 ms	325 Ap	325 Ap	600 Ap	600 Ap	1900 Ap	1900 Ap
I^2t for fusing (t=10 ms), minimum	525 A^2s	525 A^2s	1800 A^2s	1800 A^2s	18000 A^2s	18000 A^2s
No. of motor starts per hour[2] (x=6, Tx=6s, F=50%) @ 40°C	30					
Power factor	>0.5 at rated voltage					
Critical dV/dt (@Tj init = 40°C)	1000 V/µs					

1. Refer to Current derating curves
2. Overload profile for AC-53a;
   Ie: AC-53a: xIe-Tx: F-S, where Ie = nominal current (AC-53a AAC), xIe = overload current (AAC), Tx = duration of overload current (seconds), F = duty cycle (%), S = number of starts. Example; 5A: AC-53a: 30-6 : 50-30 = max. 30 starts for the RGC..15 with an overload profile of 30 A for 6 seconds with a duty cycle of 50%

Output specifications - continued

	RGC..40..	RGC..42..	RGC..60..	RGC..62..	RGC..90..P	RGC..92..P
Max. operational current[1]: AC-51 @ Ta=25°C	47 AAC	50 AAC	70 AAC	75 AAC	85 AAC	85 AAC
Max. operational current[1]: AC-51 @ Ta=40°C	40 AAC	43 AAC	60 AAC	65 AAC	85 AAC	85 AAC
Max. operational current[1]: AC-53a @ Ta=40°C	13 AAC	16 AAC	14.8 AAC	20 AAC	18 AAC	20 AAC
Operational frequency range	45 to 65 Hz					
Output protection	Integrated varistor					
Leakage current @ rated voltage	<3 mAAC					
Minimum operational current	400 mAAC	500 mAAC	400 mAAC	500 mAAC	400 mAAC	500 mAAC
Repetitive overload current (Motor rating) UL508: Ta=40°C, t_{ON}=1 s, t_{OFF}=9 s, 50 cycles	126 AAC	126 AAC	126 AAC	168 AAC	168 AAC	168 AAC
Non-repetitive surge current (I_{TSM}), t=10 ms	800 Ap	1900 Ap	800 Ap	1900 Ap	1150 Ap	1900 Ap
I^2t for fusing (t=10 ms), minimum	3200 A^2s	18000 A^2s	3200 A^2s	18000 A^2s	6600 A^2s	18000 A^2s
No. of motor starts per hour[2] (x=6, Tx=6s, F=50%) @ 40°C	30					
Power factor	>0.5 at rated voltage					
Critical dV/dt (@Tj init = 40°C)	1000 V/µs					

1. Refer to Current derating curves
2. Overload profile for AC-53a;
   Ie: AC-53a: xIe-Tx: F-S, where Ie = nominal current (AC-53a AAC), xIe = overload current (AAC), Tx = duration of overload current (seconds), F = duty cycle (%), S = number of starts. Example; 5A: AC-53a: 30-6 : 50-30 = max. 30 starts for the RGC..15 with an overload profile of 30 A for 6 seconds with a duty cycle of 50%

Output voltage specifications

	RGC..23..	RGC..60..
Operational voltage range	24-240 VAC, +10% -15% on max	42-600 VAC, +10% -15% on max
Blocking voltage	800 Vp	1200 Vp
Internal varistor	275 V	625 V

Motor ratings: HP (UL508) / kW (EN/IEC 60947-4-2) @ 40°C

	115 VAC	230 VAC	400 VAC	480 VAC	600 VAC
RGC..15	⅓HP / 0.18kW	1HP / 0.37kW	2HP / 0.75kW	3HP / 1.1kW	3HP / 1.5kW
RGC..20	½HP / 0.18kW	1½HP / 0.37kW	2HP / 0.75kW	3HP / 1.1kW	3HP / 1.5kW
RGC..25	⅓HP / 0.18kW	1HP / 0.37kW	2HP / 0.75kW	3HP / 1.1kW	3HP / 1.5kW
RGC..30	¾HP / 0.37kW	2HP / 1.1kW	3HP / 1.5kW	5HP / 2.2kW	5HP / 3.7kW
RGC..32	⅓HP / 0.18kW	1HP / 0.37kW	2HP / 0.75kW	3HP / 1.1kW	3HP / 1.5kW
RGC..40	1HP / 0.56kW	3HP / 1.5kW	5HP / 2.2kW	5HP / 2.2kW	7½HP / 4kW
RGC..42	1½HP / 0.56kW	3HP / 1.5kW	5HP / 2.2kW	7½HP / 3.7kW	10HP / 4kW
RGC..60	1½HP / 0.56kW	3HP / 1.5kW	5HP / 3kW	7½HP / 4kW	10HP / 4kW
RGC..62	2HP / 0.75kW	5HP / 1.5kW	7½HP / 4kW	10HP / 4kW	15HP / 5.5kW
RGC..90	2HP / 0.75kW	5HP / 1.5kW	7½HP / 4kW	10HP / 4kW	15HP / 5.5kW
RGC..92	2HP / 0.75kW	5HP / 1.5kW	7½HP / 4kW	10HP / 4kW	15HP / 5.5kW

Inputs

		RGC..D..	RGC..A..
Control voltage range [3, 4]	**RGC..23..** **RGC..60..**	3 - 32 VDC 4 - 32 VDC	20-275 VAC, 24 (-10%) -190 VDC
Control voltage range	**RGC...P**	5 - 32 VDC	
Pick-up voltage	**RGC..23..** **RGC..60..**	3.0 VDC 3.8 VDC	20 VAC/DC
Pick-up voltage	**RGC..P**	5 VDC	20 VAC/ 24 VDC
Drop-out voltage		1.0 VDC	5 VAC/DC
Maximum reverse voltage		32 VDC	-
Maximum response time	**RGC1A..**	0.5 cycle + 500 µs @ 24 VDC	2 cycles @ 230 VAC/110 VDC
Maximum response time	**RGC1B..**	350µs @ 24 VDC	-
Response time drop-out		0.5 cycle + 500 µs @ 24 VDC	0.5 cycle + 40 µs @ 230 VAC/110 VDC
Input current @ 40°C		See diagrams below	

3. DC control to be supplied by class 2 power source according to UL1310
4. For GL approved models control range for RGC1.23... is 4-32VDC and for RGC1.60... 5-32VDC

Input current vs. input voltage

RGC..D

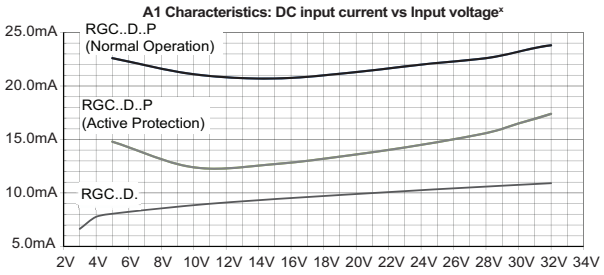

x: Input currents for all models except RGC1..D90GGEP and RGC1..D92GGEP

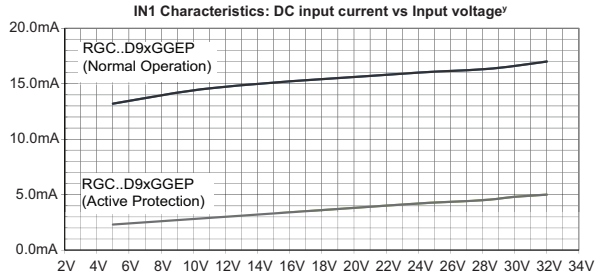

y: input currents valid only for RGC1..D90GGEP and RGC1..D92GGEP

RGC..A

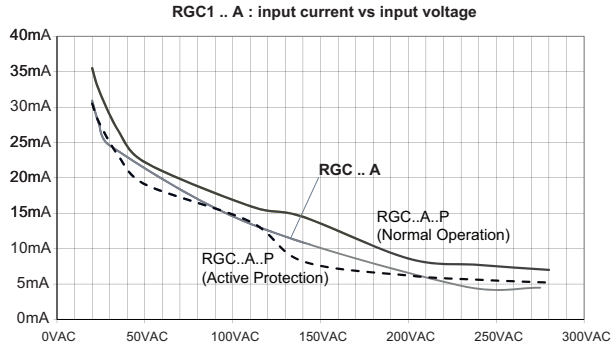

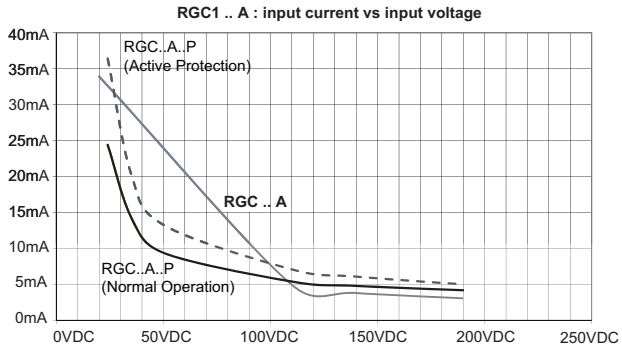

Overtemperature alarm specifications - RGC..P

	RGC..D..P	RGC..A..P
Output type	PNP open collector	Potential Free
Normal state	Closed	
Visual indication	Continous red LED when fault (over temperature) is present	
Maximum current rating	50 mADC	
Rated voltage, Ua (11, 12, OUT) [5, 6]	24 VDC -15%, +20%	
Rated supply voltage, Us (A1) only for RGC..D9xGGEP	24V DC ± 10%	N/A
Fan supply rating, Uf (IN2, IN3) only for RGC..A9xGGEP	N/A	24 VDC ±10%, 50mA nominal
Alarm voltage drop **Typical** **Maximum**	2.8 VDC 4.0 VDC	1.8 VDC 3.5 VDC

5. According to EN 61131-2: 2003. DC supply for alarm signal should be supplied from a Class 2 power source
6. Maximum voltage to be applied between 11+ and 12- (Ua) terminals should be 35VDC maximum with reference to A2-

Output power dissipation

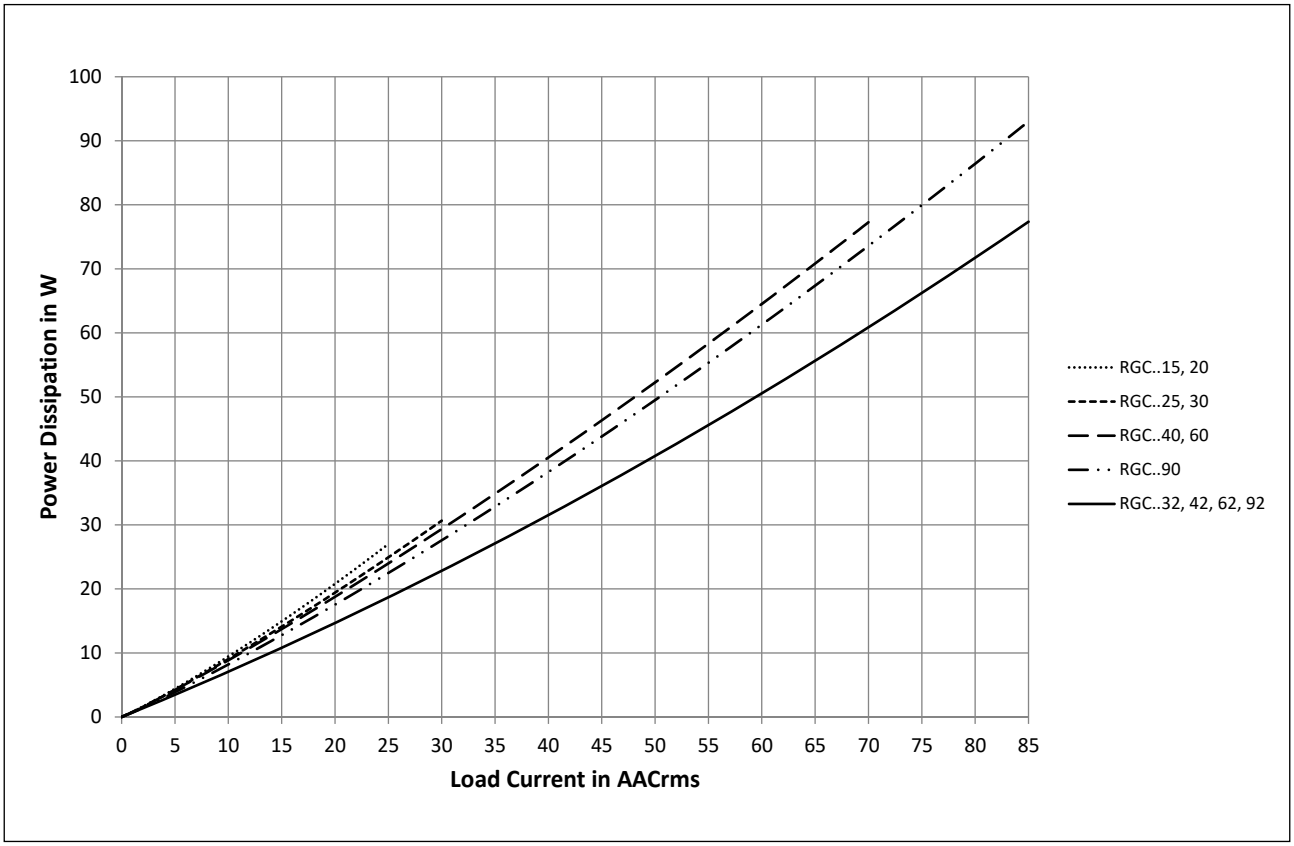

Current derating

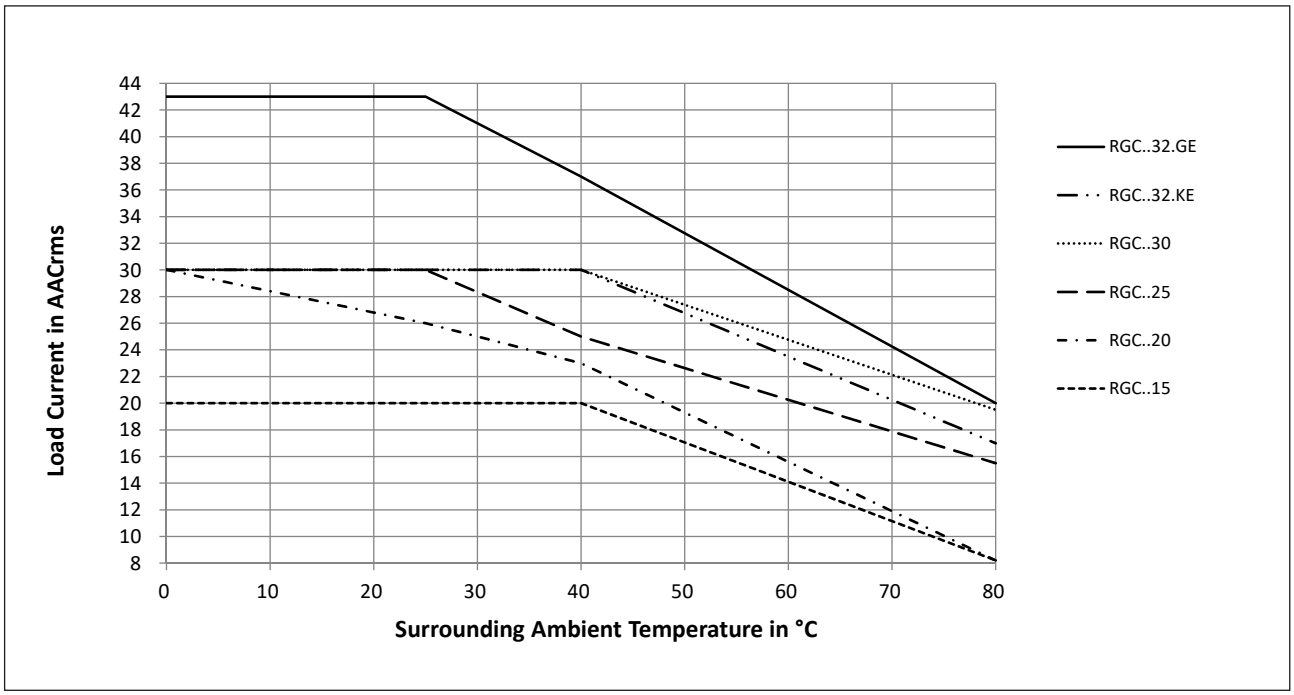

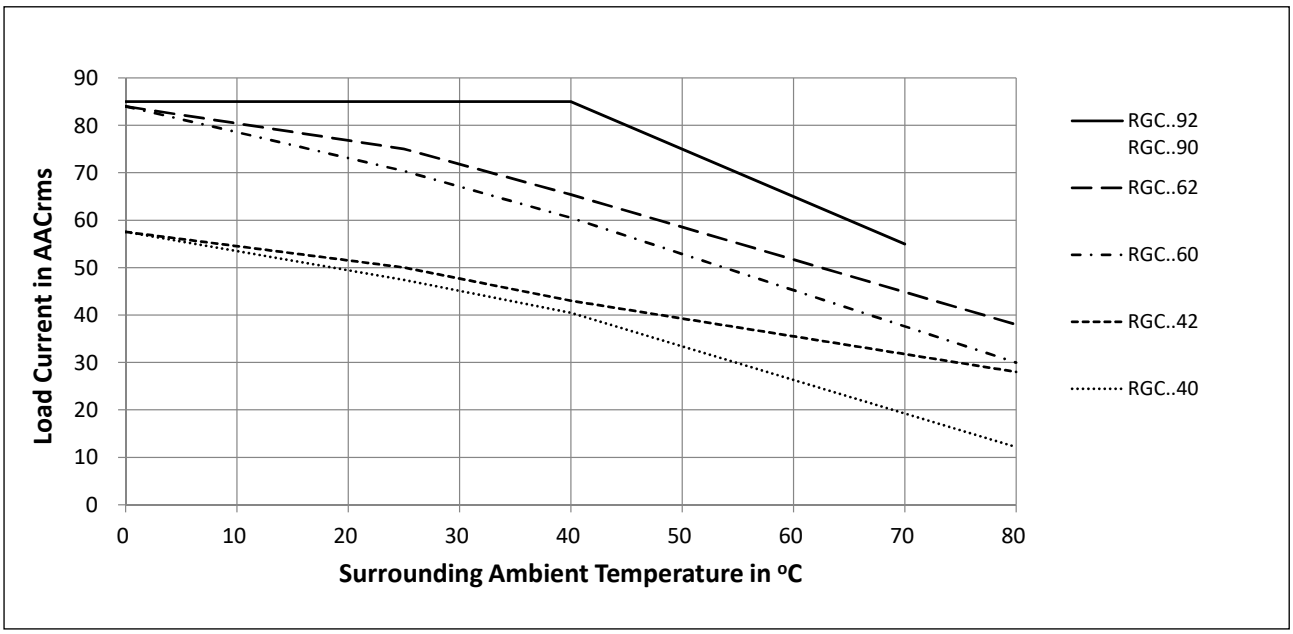

RGC...P models max. operating temperature is + 70˚C / + 158°F

Derating vs. spacing curves

RGC..15..

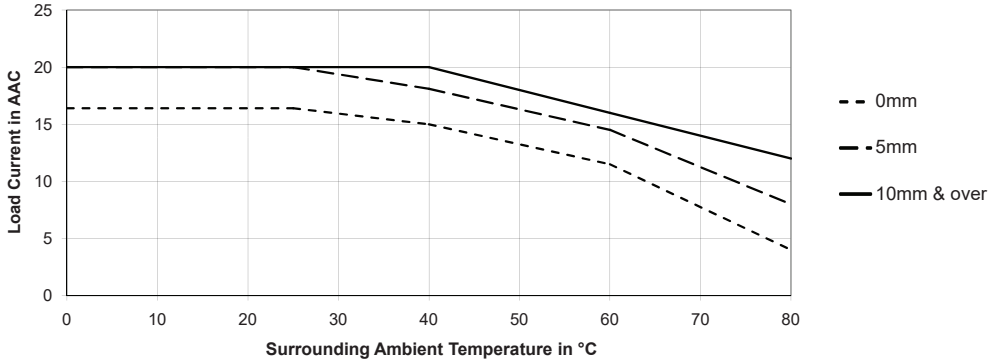

RGC..20..

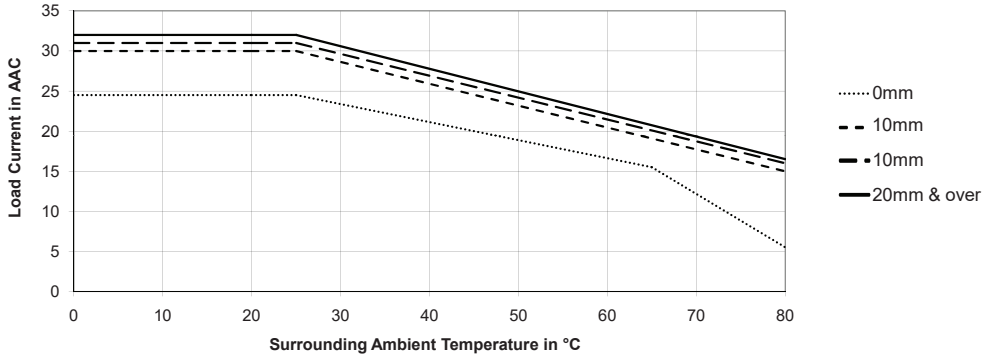

RGC..25..

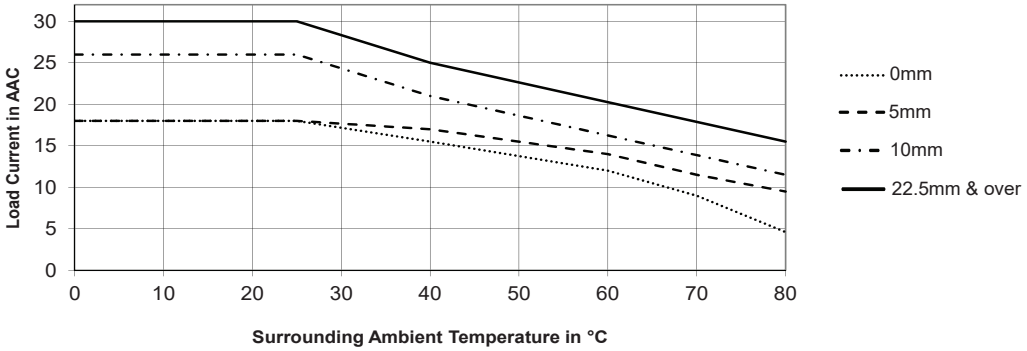

RGC..30..

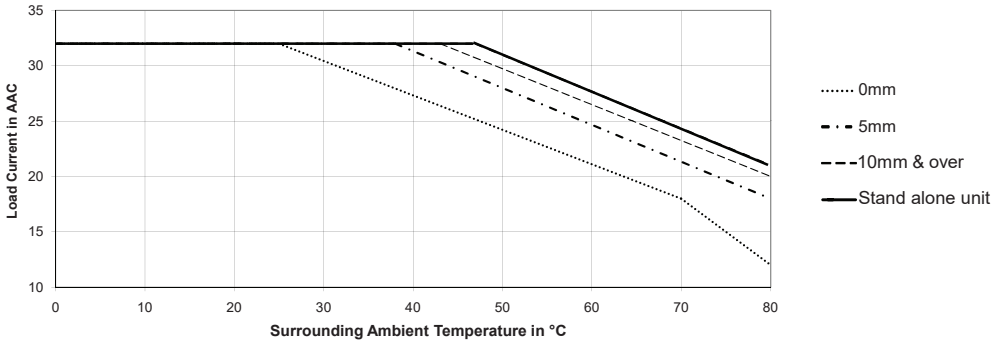

Derating vs. Spacing curves

RGC..32..

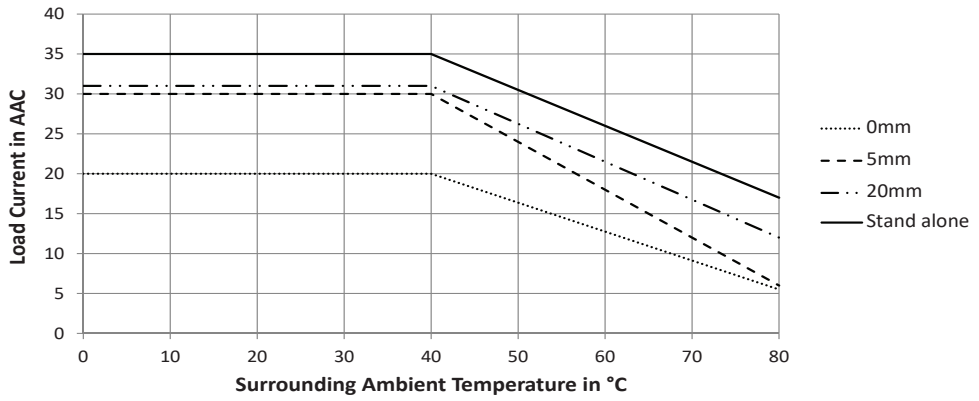

RGC..40..

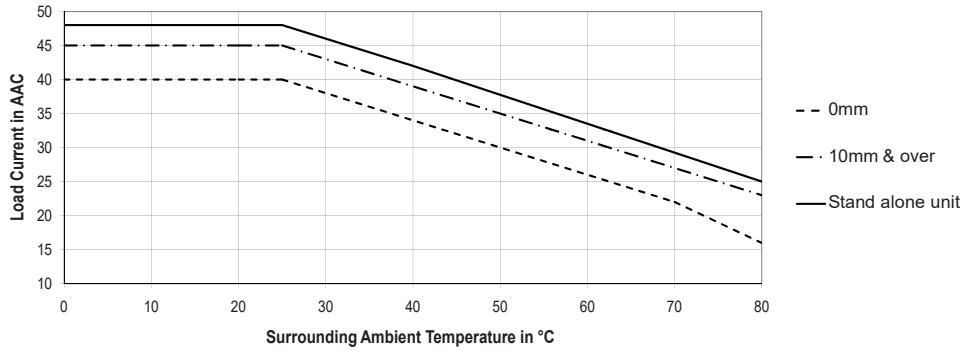

RGC..42..

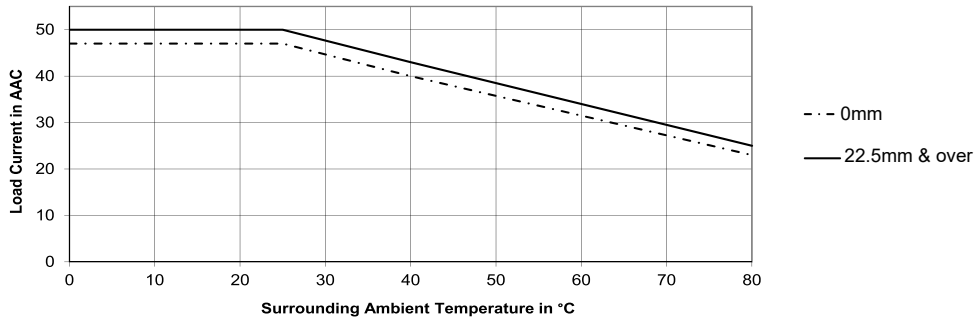

RGC..60..

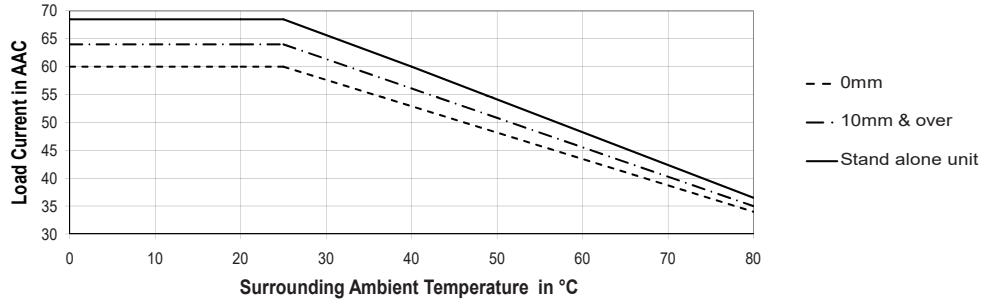

Derating vs. Spacing curves

RGC..62..

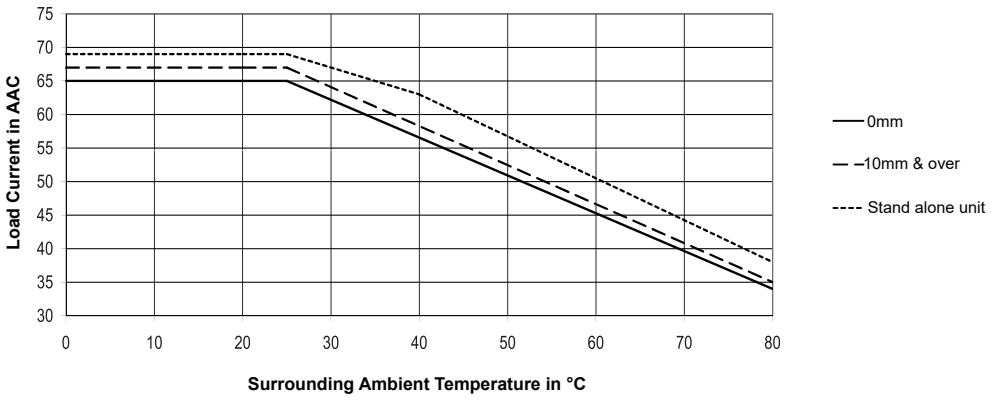

RGC.. 90GGEP, RGC..92GGEP

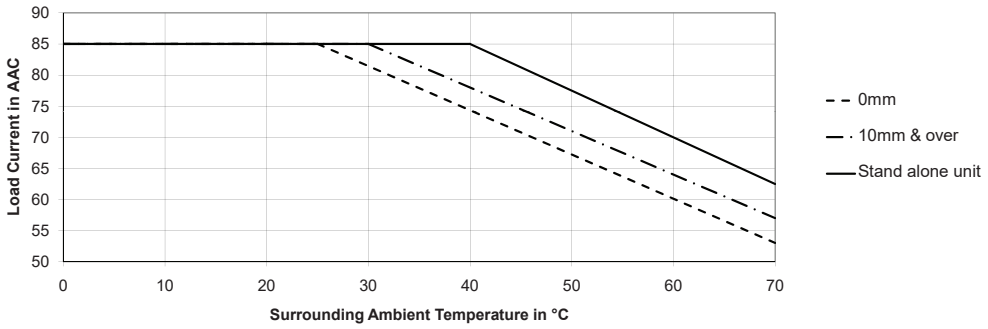

Compatibility and conformance

Approvals	CE, c UL us LISTED, DVE [7], GL [8], EAC
Standards compliance	LVD: EN/IEC 60947-4-2, EN/IEC 60947-4-3 EMCD: EN/IEC 60947-4-3 UL: UL508, E172877, NMFT cUL: C22.2 No. 14, E172877, NMFT7 VDE: VDE0660-109 GL
UL short circuit current rating	100k Arms (refer to short circuit current section, Type 1 – UL508)

7. RGC..32 models are not VDE approved
8. Germanischer Lloyd approval applicable only to models RGC..15, RGC..20, RGC..25 and RGC..30

Electromagnetic compatibility (EMC) - Immunity	
Electrostatic discharge (ESD)	EN/IEC 61000-4-2 8 kV air discharge, 4 kV contact (PC1)
Radiated radio frequency	EN/IEC 61000-4-3 10 V/m, from 80 MHz to 1 GHz (PC1) 10 V/m, from 1.4 to 2 GHz (PC1) 10 V/m, from 2 to 2.7 GHz (PC1)
Electrical fast transient (burst)	EN/IEC 61000-4-4 Output: 2 kV, 5 kHz (PC1) Input: 1 kV, 5 kHz (PC1)
Conducted radio frequency	EN/IEC 61000-4-6 10 V/m, from 0.15 to 80 MHz (PC1)
Electrical surge **RGC..P** **RGC..P** **RGC..P**	EN/IEC 61000-4-5 Output, line to line: 1 kV (PC1) Output, line to earth: 2 kV (PC1) Input, line to line, 1kV (PC2) Input, line to earth, 2kV (PC2) DC lines, line to line, 500V (PC2) DC lines, line to earth, 500V (PC2) Signal lines, line to earth, 1kV (PC2)
Voltage dips	EN/IEC 61000-4-11 0% for 0.5, 1 cycle (PC2) 40% for 10 cycles (PC2) 70% for 25 cycles (PC2) 80% for 250 cycles (PC2)
Voltage interruptions	EN/IEC 61000-4-11 0% for 5000 ms (PC2)

Electromagnetic compatibility (EMC) - Emissions	
Radio interference field emission (radiated)	EN/IEC 55011 Class A: from 30 to 1000 MHz
Radio interference voltage emissions (conducted)	EN/IEC 55011 Class A: from 0.15 to 30 MHz (External filter may be required - refer to Filtering section)

Additional conformance to railway standards

Applicable to variants	RGC..
Additional conformance specific to railway applications	EN 50155 EN 45545-2 EN 50121-3-2
Hazardous level conformance according to EN 45545-2	HL1, HL2 for requirement R23 HL1 for requirement R22
Operating temperature class according to EN 50155	OT3 (-25 °C to +70 °C)
Vibration and shock	EN 61373 Category 1, Class B
Additional EMC conformance	accoding to EN 50121-3-2
Radiated radio frequency immunity	EN/IEC 61000-4-3 20 V/m, from 80 MHz to 1 GHz (PC1) 10 V/m, from 1.4 to 2 GHz (PC1) 5 V/m, from 2 to 2.7 GHz (PC1) 3V/m, 5.1 - 6 GHz (PC1)
Power quality measurement	EN/IEC 61000-4-30 50 Hz - 2 kHz, <8% THD (PASS)

Filter connection diagram

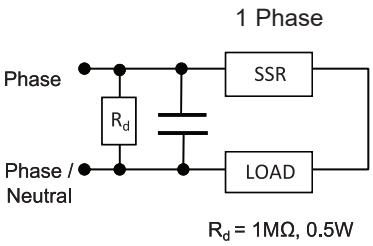

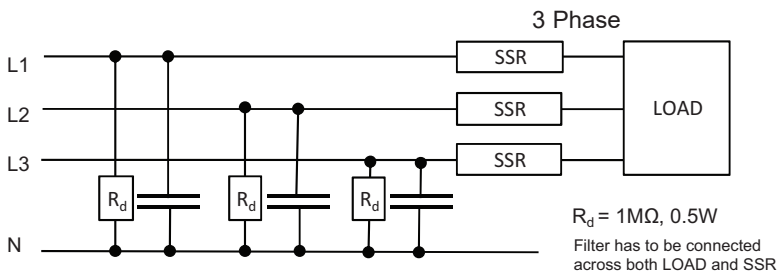

Filtering

Part number	Suggested filter for EN 55011 Class A compliance	Maximum heater current [AAC]
RGC1A23..15	68nF/ 275 V / X1	20 AAC
RGC1A23..20	68nF/ 275 V / X1	20 AAC
RGC1A23..25, RGC1A23..30	220 nF / 275V / X1	30 AAC
RGC1A23..40, RGC1A23..60	220 nF / 275V / X1 330 nF / 275V / X1	30 AAC 45 AAC
RGC1A23..42, RGC1A23..62	330 nF / 275V / X1 680 nF / 275V / X1	35 AAC 65 AAC
RGC1A60..15	100 nF / 760V / X1	20 AAC
RGC1A60..20	100 nF / 760V / X1	20 AAC
RGC1A60..25, RGC1A60..30	220 nF / 760V / X1	30 AAC
RGC1A60..40, RGC1A60..60	220 nF / 760V / X1 330 nF / 760V / X1	25 AAC 45 AAC
RGC1A60..32, RGC1A60..42, RGC1A60..62, RGC1A60..9x	330 nF / 760V / X1 680 nF / 760V / X1	40 AAC 65 AAC

Note:

- Control input lines must be installed together to maintain products' susceptability to Radio Frequency interference.
- Use of AC solid state relays may, according to the application and the load current, cause conducted radio interferences. Use of mains filters may be necessary for cases where the user must meet E.M.C requirements. The capacitor values given inside the filtering specification tables should be taken only as indications, the filter attenuation will depend on the final application.
- This product has been designed for Class A equipment. Use of this product in domestic environments may cause radio interference, in which case the user may be required to employ additional mitigation methods.

- Performance Criteria 1 (PC1): No degradation of performance or loss of function is allowed when the product is operated as intended.
- Performance Criteria 2 (PC2): During the test, degradation of performance or partial loss of function is allowed. However when the test is complete the product should return operating as intended by itself.
- Performance Criteria 3 (PC3): Temporary loss of function is allowed, provided the function can be restored by manual operation of the controls.

Environmental specifications

Operating temperature RGC..P	-40°C to +80°C (-40°F to +176°F) -30°C to +70°C (-22°F to +158°F)
Storage temperature	-40 to +100°C (-40 to +212 °F)
Relative humidity	95% non-condensing @ 40°C
Pollution degree	2
Installation altitude	0-1000 m. Above 1000 m derate linearly by 1% of FLC per 100 m up to a maximum of 2000 m
Vibration resistance	2g / axis (2-100Hz, IEC 60068-2-6, EN 50155, EN 61373)
Impact resistance	15/11 g/ms (EN50155, EN61373)
EU RoHS compliant	Yes
China RoHS	25

The declaration in this section is prepared in compliance with People's Republic of China Electronic Industry Standard SJ/T11364-2014: Marking for the Restricted Use of Hazardous Substances in Electronic and Electrical Products.

Part Name	**Toxic or Harardous Substances and Elements**					
	Lead (Pb)	Mercury (Hg)	Cadmium (Cd)	Hexavalent Chromium (Cr(VI))	Polybrominated biphenyls (PBB)	Polybrominated diphenyl ethers (PBDE)
Power Unit Assembly	x	O	O	O	O	O

O: Indicates that said hazardous substance contained in homogeneous materials fot this part are below the limit requirement of GB/T 26572.

X: Indicates that said hazardous substance contained in one of the homogeneous materials used for this part is above the limit requirement of GB/T 26572.

这份申明根据中华人民共和国电子工业标准
SJ/T11364-2014：标注在电子电气产品中限定使用的有害物质

零件名称	有毒或有害物质与元素					
	铅 (Pb)	汞 (Hg)	镉 (Cd)	六价铬 (Cr(VI))	多溴化联苯 (PBB)	多溴联苯醚 (PBDE)
功率单元	x	O	O	O	O	O

O:此零件所有材料中含有的该有害物低于GB/T 26572的限定。

X: 此零件某种材料中含有的该有害物高于GB/T 26572的限定。

Short circuit protection

Protection Co-ordination, Type 1 vs Type 2:

Type 1 protection implies that after a short circuit, the device under test will no longer be in a functioning state. In Type 2 co-ordination the device under test will still be functional after the short circuit. In both cases, however the short circuit has to be interrupted. The fuse between enclosure and supply shall not open. The door or cover of the enclosure shall not be blown open. There shall be no damage to conductors or terminals and the conductors shall not separate from terminals. there shall be no breakage or cracking of insulating bases to the extent that the integrity of the mounting of live parts is impaired. Discharge of parts or any risk of fire shall not occur.

The product variants listed in the table hereunder are suitable for use on a circuit capable of delivering not more than 100,000 Arms Symmetrical Amperes, 600 Volts maximum when protected by fuses. Tests at 100,000 A were performed with Class J fuses, fast acting; please refer to the table below for maximum allowed ampere rating of the fuse. Use fuses only.

Tests with Class J fuses are representative of Class CC fuses.

Protection co-ordination Type 1 according to UL 508				
Part No.	**Prospective short circuit current [kArms]**	**Max fuse size [A]**	**Class**	**Voltage [VAC]**
RGC..15	100	30	J or CC	Max. 600
RGC..20		30	J or CC	
RGC..25		30	J or CC	
RGC..30		30	J or CC	
RGC..32		80	J	
RGC..40		40	J	
RGC..42		90	J	
RGC..60		40	J	
RGC..62		90	J	
RGC..90		40	J	
RGC..92		90	J	

Protection co-ordination Type 2 (IEC/EN 60947-4-2/ -4-3)						
Part No.	Prospective short circuit current [kArms]	Ferraz Shawmut (Mersen)		Siba		Max. voltage [VAC]
		Max fuse size [A]	Part number	Max fuse size [A]	Part number	
RGC..15	10	25	6.9xx CP GRC 14x51 /25	32	50 142 06.32	600
	100					
RGC..20	10	40	6.6xx CP URD 22x58 /40	32	50 142 06.32	600
	100					
RGC..25	10	40	6.6xx CP URD 22x58 /40	32	50 142 06.32	600
	100					
RGC..30	10	40	6.9xx CP GRC 22x58 /40	32	50 142 06.32	600
	100					
RGC..40	10	63	6.621 CP URGD 27x60 /63	63	50 194 20.63	600
		70	A70QS70-4			
	100	63	6.621 CP URQ 27x60 /63			
RGC..32 RGC..42	10	63	6.9xx CP URC 14x51 /63	80	50 194 20.80	600
		70	A70QS70-4			
	100	63	6.9xx CP URC 14x51 /63			
		70	A70QS70-4			
RGC..60 up to 65AAC	10	80	6.621 CP URQ 27x60 /80	80	50 194 20.80	600
	100	-	-			
RGC..62	10	100	6.9xx CP GRC 22x58 /100	100	50 194 20.100	600
			A70QS100-4			
	100		6.621 CP URGD 27x60 /100			
			A70QS100-4			
RGC..90 up to 80AAC	10	100	6.621 CP URQ 27x60 /100	100	50 194 20.100	600
			A70QS100-4			
	100	-	-			
RGC..92	10	125	6.621 CP URQ 27x60 /125	125	50 194 20.125	600
			A70QS125-4			
	100		6.621 CP URQ 27x60 /125			
			A70QS125-4			

Protection co-ordination Type 2 with Minature Circuit Breakers (M.C.B.s)				
Solid State Relay type	**ABB Model no. for Z - type M. C. B. (rated current)**	**ABB Model no. for B - type M. C. B. (rated current)**	**Wire cross sectional area [mm²]**	**Minimum length of Cu wire conductor [m][9]**
RGC..15 RGC..20 (525 A²s)	S201 - Z4 (4A)	S201 - B2 (2A)	1.0 1.0 1.5	21.0 21.0 31.5
	S201 - Z6 UC (6A)	S201 - B2 (2A)		
RGC..25 RGC..30 (1800 A²s)	S201 - Z10 (10A)	S201-B4 (4A)	1.0 1.5 2.5	7.6 11.4 19.0
	S201 - Z16 (16A)	S201-B6 (6A)	1.0 1.5 2.5 4.0	5.2 7.8 13.0 20.8
	S201 - Z20 (20A)	S201-B10 (10A)	1.5 2.5	12.6 21.0
	S201 - Z25 (25A)	S201-B13 (13A)	2.5 4.0	25.0 40.0
	S202 - Z25 (25A)	S202-B13 (13A)	2.5 4.0	19.0 30.4
RGC..40 (3200 A²s)	S201 - Z25 (25A)	S201 - B13 (13A)	2.5 4.0 6.0	7.0 11.2 16.8
RGC..60 (3200 A²s)	S201 - Z25 (25)	S201 - B13 (13A)	2.5 4.0 6.0	7.0 11.2 16.8
RGC..90 (6600 A²s)	S201 - Z20 (20A)	S201-B10 (10A)	1.5 2.5 4.0	4.2 7.0 11.2
	S201 - Z32 (32A)	S201-B16 (16A)	2.5 4.0 6.0	13.0 20.8 31.2
	S202 - Z20 (20A)	S202-B10 (10A)	1.5 2.5 4.0	1.8 3.0 4.8
	S202 - Z32 (32A)	S202-B16 (16A)	2.5 4.0 6.0 10.0	5.0 8.0 12.0 20.0
	S202 - Z50 (50A)	S202-B25 (25A)	4.0 6.0 10.0	14.8 22.2 37.0
RGC..32 RGC..42 RGC..62 RGC..92 (18000 A²s)	S201-Z32 (32A)	S201-B16 (16A)	2.5 4.0 6.0	3.0 4.8 7.2
	S201-Z50 (50A)	S201-B25 (25A)	4.0 6.0 10.0 16.0	4.8 7.2 12.0 19.2
	S201-Z63 (63A)	S201-B32 (32A)	6.0 10.0 16.0	7.2 12.0 19.2

9. Between MCB and Load (including return path which goes back to the mains)

Note: A prospective current of 6 kA and a 230 / 400 V power supply is assumed for the above suggested specifications. For cables with different cross section than those mentioned above please consult Carlo Gavazzi's Technical Support Group.

S201 models refer to 1-pole M.C.B., S202 models refer to 2-poles M.C.B.

Over temperature alarm procedure and fan operation for versions with integrated fan

ALARM Signal and Fan
(applicable to RGC..D90GGEP)
(applicable to RGC..D92GGEP)

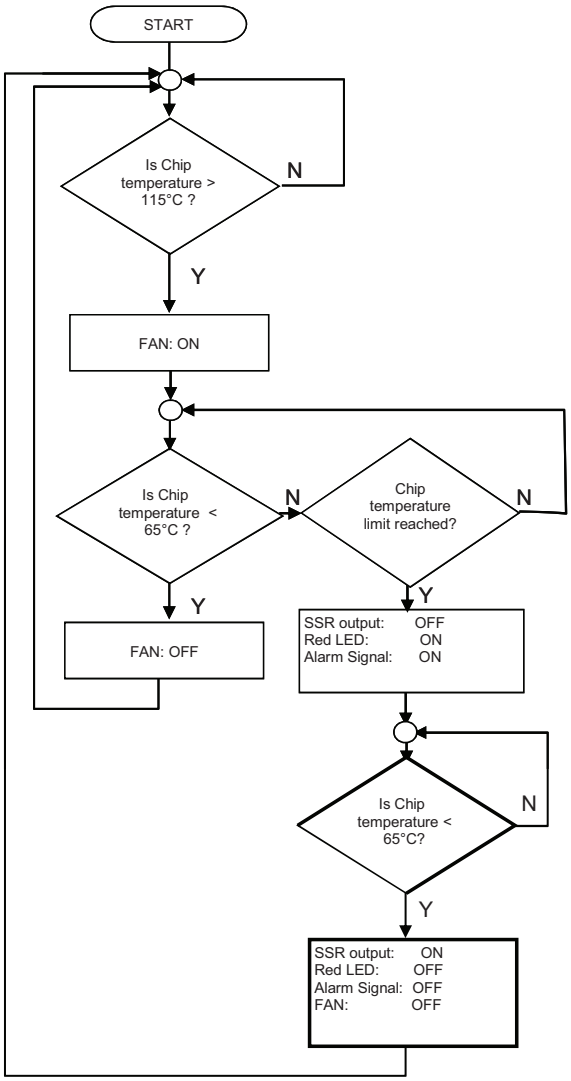

ALARM Signal only

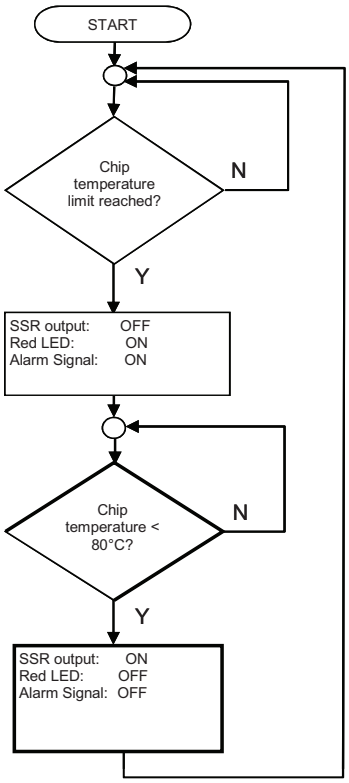

CAUTION

- Alarm condition resets whenever the voltage signal is removed from terminal A1 (+)
- In the case of RGC1A60D9xGGEP, if the voltage signal is not applied across A1(+) and A2 (-) terminals, the overtemperature detection and functionality is lost (including fan operation and alarm signalling)
- In the case of RGC1A60A9xGGEP it is necessary to supply IN2 and IN3 with 24VDC for fan operation.
- Alarm procedure for RGC1A60A9xGGEP follows 'Alarm signal only' flow since fan is continously operating.
- Alarm condition automatically resets ONLY when power semiconductor temperature < 80˚C
- Temperatures indicated are typical figures.

Dimensions

RGC..15KKE, RGC..25KKE, RGC..32KKE

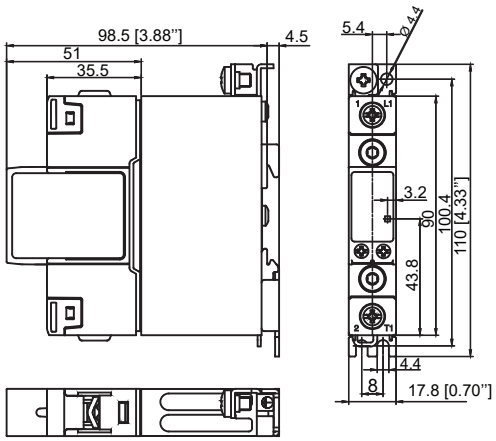

RGC..15MKE, RGC..25MKE, RGC..32MKE

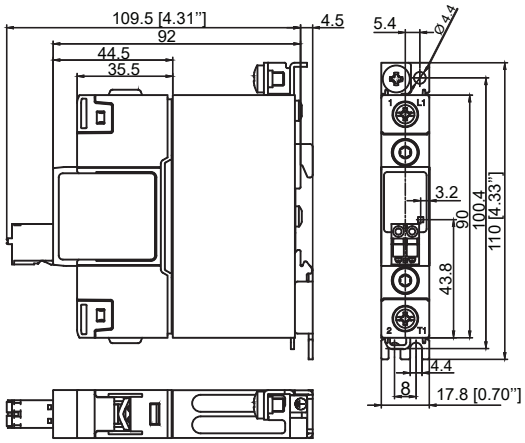

RGC..20KKE

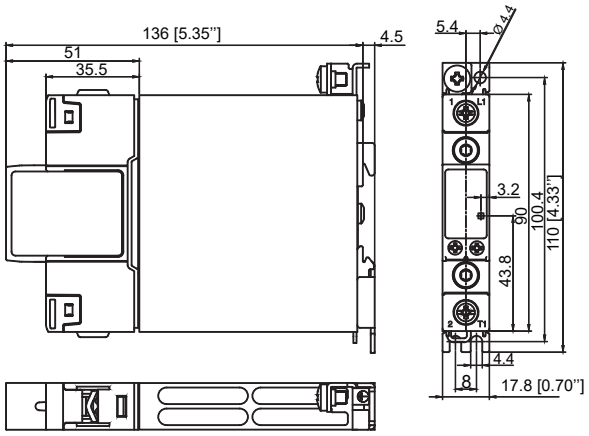

RGC..20MKE

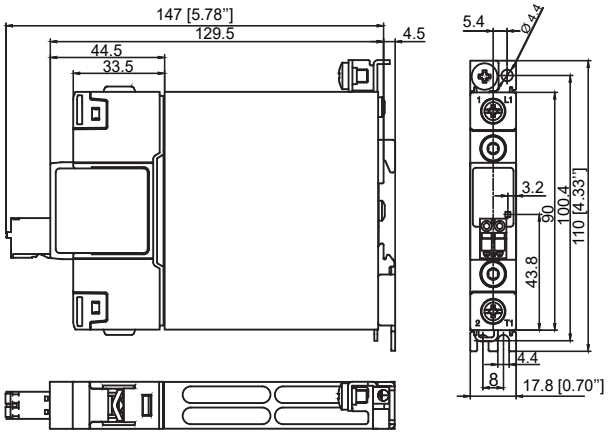

RGC..30KKE

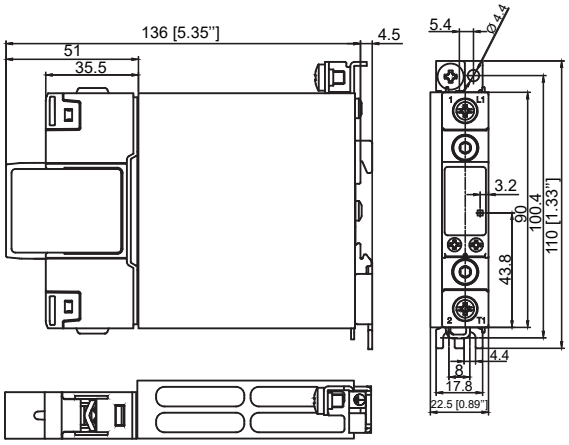

RGC..30MKE

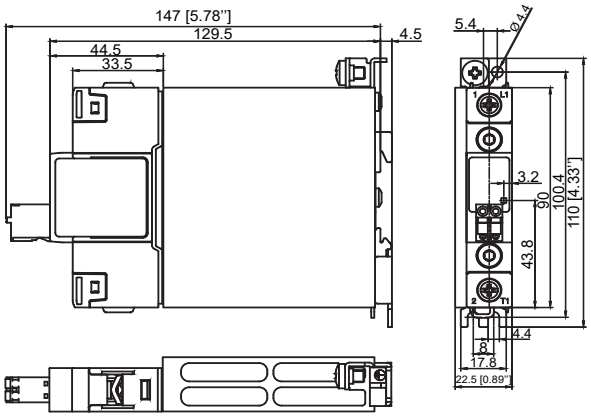

Housing width tolerance +0.5mm, -0mm as per DIN 43880. All other tolerances +/- 0.5mm.
Dimensions in mm.

Dimensions - continued

RGC..32KGE

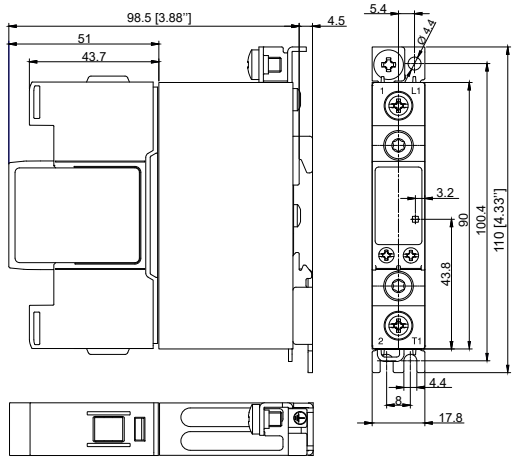

RGC..32MGE

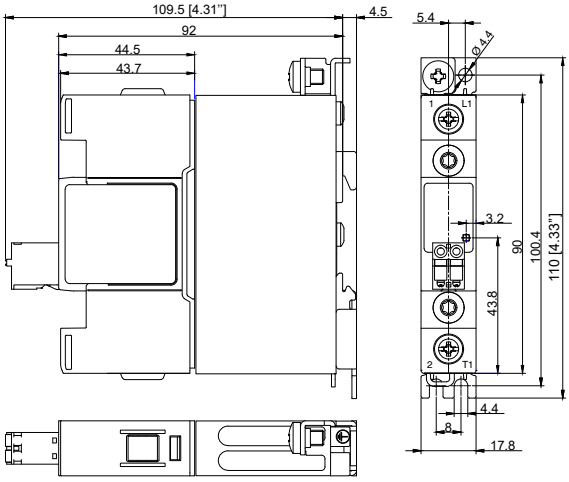

RGC..40KGE, RGC..42KGE

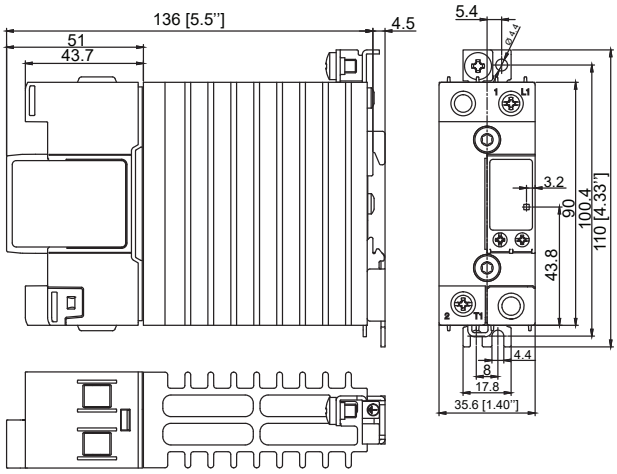

RGC..40MGE, RGC..42MGE

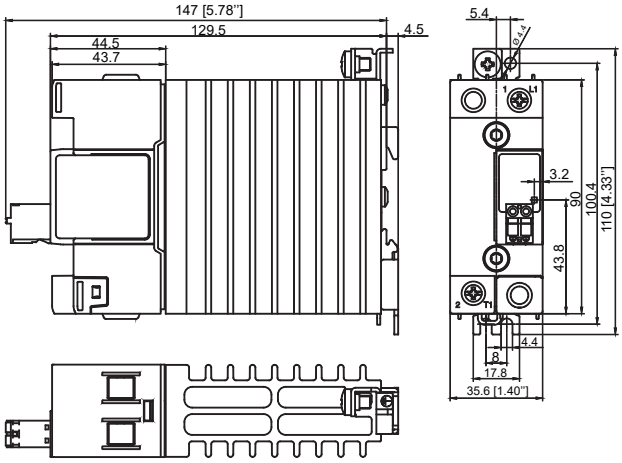

RGC..60KGE, RGC..62KGE

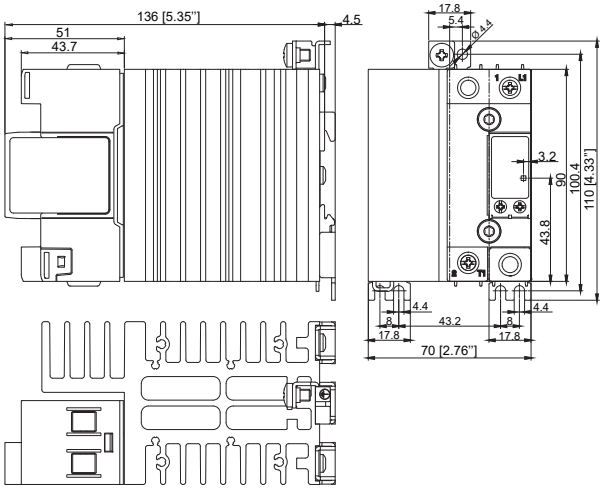

RGC..62MGE

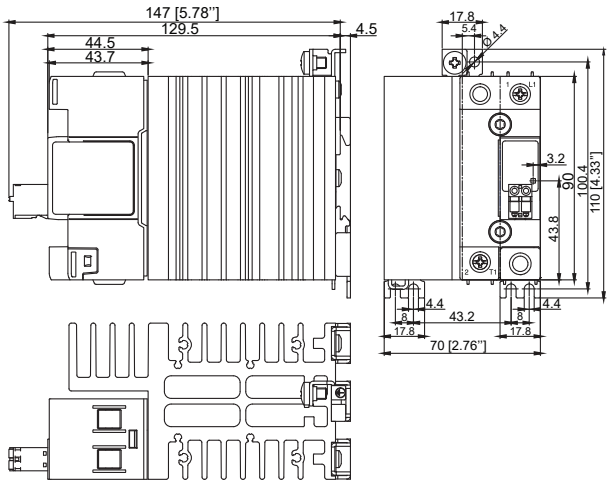

Housing width tolerance +0.5mm, -0mm as per DIN 43880. All other tolerances +/- 0.5mm.
Dimensions in mm.

Dimensions - Over Temperature Protection

RGC..30GKEP

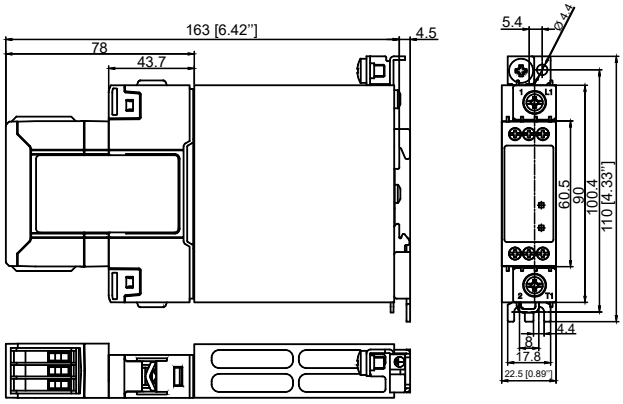

RGC..42GGEP

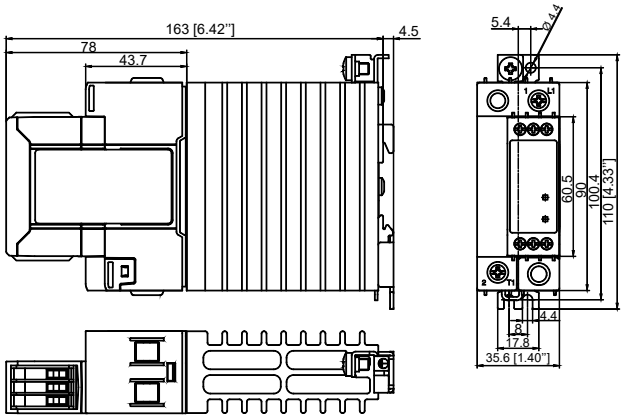

RGC..62GGEP

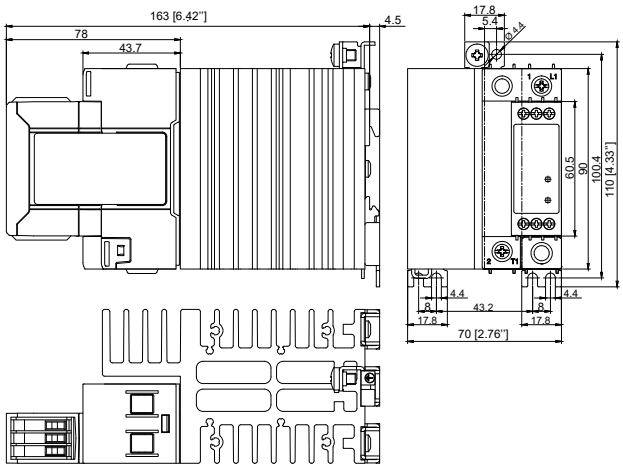

RGC..90GGEP, RGC..92GGEP

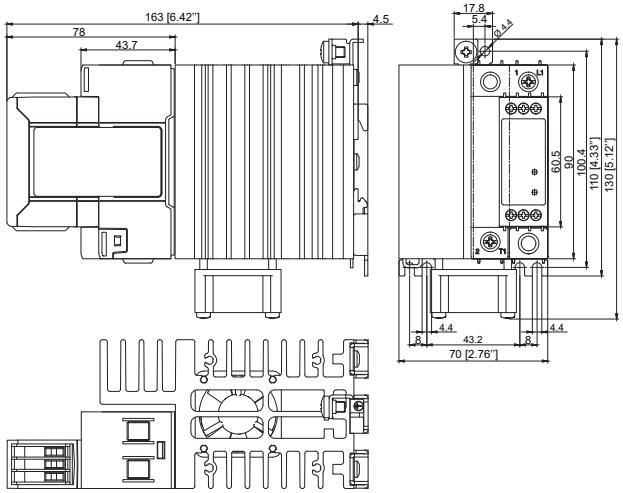

Housing width tolerance +0.5mm, -0mm as per DIN 43880. All other tolerances +/- 0.5mm.
Dimensions in mm.

Terminal layout

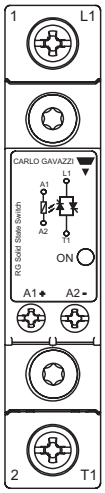

RGC..15KKE, RGC..20KKE, RGC..25KKE, RGC..30KKE, RGC..32KKE, RGC..32KGE

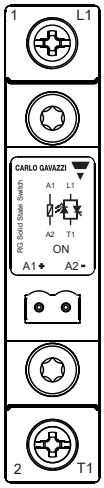

RGC..15MKE, RGC..20MKE, RGC..25MKE, RGC..30MKE, RGC..32MKE, RGC..32MGE

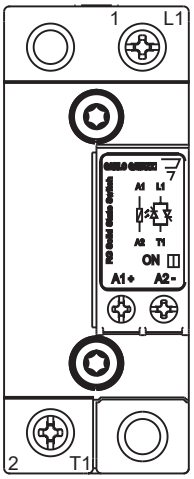

RGC..40KGE, RGC..42KGE, RGC..60KGE, RGC..62KGE

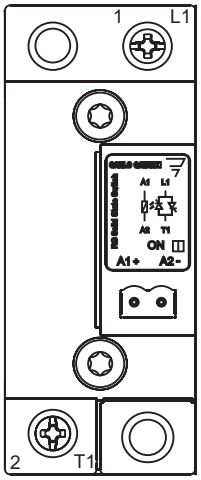

RGC..40MGE, RGC..42MGE, RGC..62MGE

1/L1: Mains supply connection
2/T1: Load connection
A1(+): Positive control signal
A2(-): Control ground
⏚: Protective Earth

Terminal layout - Over Temperature Protection

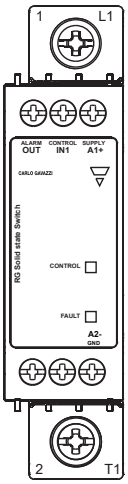

RGC..30GKEP

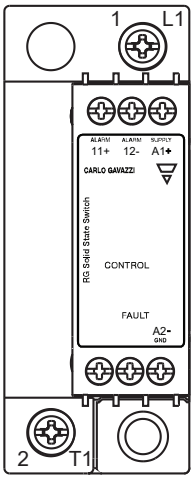

RGC..42GGEP
RGC..62GGEP

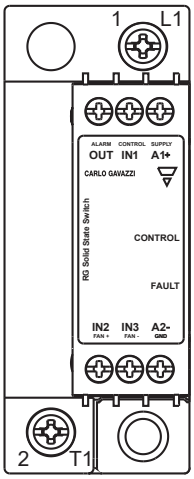

RGC..D9xGGEP

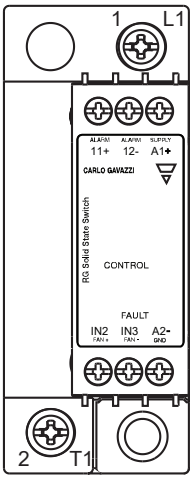

RGC..A9xGGEP

1/L1: Mains supply connection
2/T1: Load connection
A1(+): Positive control signal, Positive supply voltage in case of RGC1A60D9xGGEP
A2 (-): Control ground
IN1: Control signal (only for RGC1A60D9xGGEP)
IN2: Fan +supply (only for RGC1A60A9xGGEP)
IN3: Fan -supply (only for RGC1A60A9xGGEP)
11+ : Alarm output (+)
OUT, 12 - : Alarm output (-), OUT only for RGC1A60D9xGGEP
⏚: Protective earth

Connection diagram

Variant without Over Temperature Protection

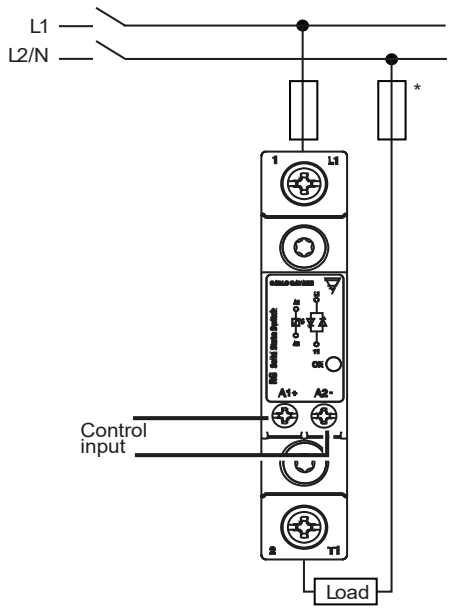

Variant with Over Temperature Protection

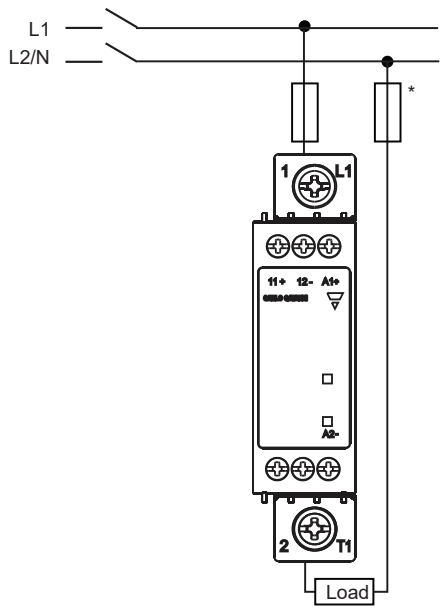

* depends on system requirements

Connection diagram - Auxiliary connections for Over Temperature Protection variants

DC Control

RGC1...D30GKEP
RGC1...D42GGEP
RGC1...D62GGEP

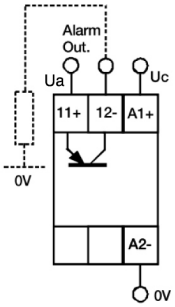

Uc: 5 - 32 VDC
Ua: max 35VDC
Alarm Output: max. 50mA

A1, A2: Control voltage
11, 12: Alarm output

RGC1...D9xGGEP

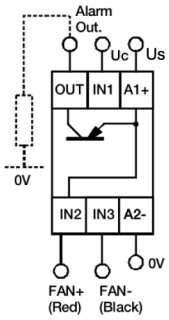

Uc: 5 - 32 VDC
Us: 24 VDC
Alarm Output: max. 50mA

Note: Fan is internally supplied

A1, A2: Supply voltage
IN1: Control voltage
OUT: Alarm output

AC Control

RGC1...A30GKEP
RGC1...A42GGEP
RGC1...A62GGEP

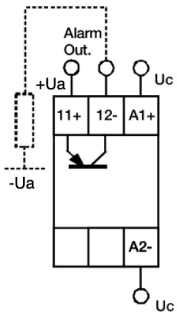

Uc: 24 - 275 VAC
24 - 190 VDC
Ua: max 35VDC
Alarm Output: max. 50mA

A1, A2: Control voltage
11, 12: Alarm output

RGC1...A9xGGEP

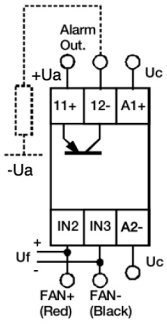

Uc: 24 - 275 VAC
24 - 190 VDC
Ua: max. 35 VDC
Alarm Output: max. 50mA
Uf: 24 VDC (needs to be supplied externally)

A1, A2: Control voltage
11, 12: Alarm output
IN2, IN3: Fan supply

Functional diagram

DC control

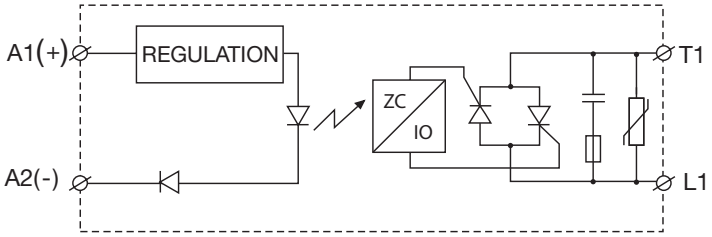

AC control

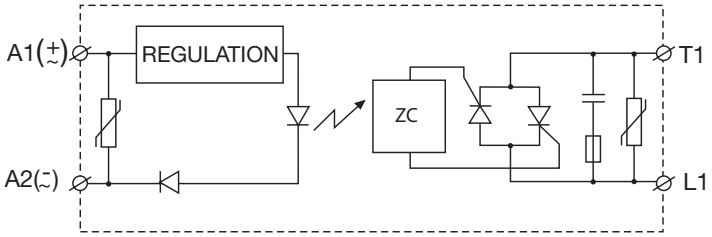

Installation

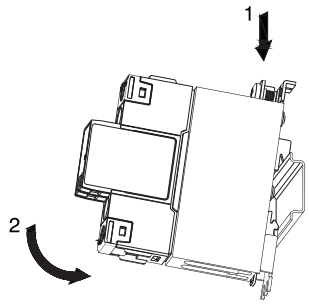

Mounting on DIN rail

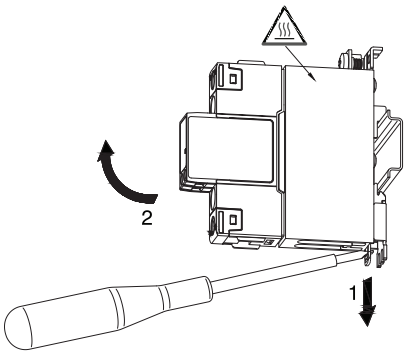

Dismounting from DIN rail

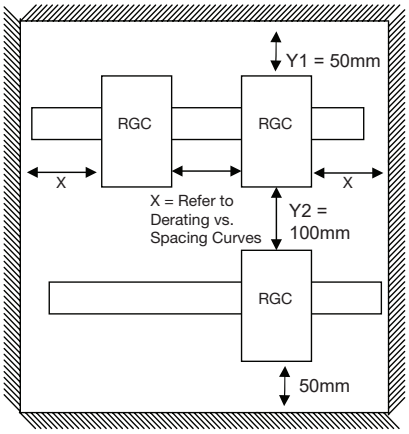

Connection Specifications

Power connections			
Terminals	1/L1, 2/T1		
Conductors	Use 75°C copper (Cu) conductors		
	RGC..KKE, RGC..MKE, RGC..GKEP		RGC..KGE, RGC..MGE, RGC..GGEP
	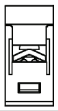	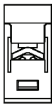	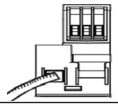
Connection type	M4 screw with captivated washer		M5 screw with box clamp
Stripping length	12 mm		11 mm
Rigid (solid & stranded) UL/cUL rated data	2x 2.5 – 6.0 mm² 2x 14 – 10 AWG	1x 2.5 – 6.0 mm² 1x 14 – 10 AWG	1x 2.5 – 25.0 mm² 1x 14 – 3 AWG
Flexible with end sleeve	2x 1.0 – 2.5 mm² 2x 2.5 – 4.0 mm² 2x 18 – 14 AWG 2x 14 – 12 AWG	1x 1.0 – 4.0 mm² 1x 18 – 12 AWG	1x 2.5 – 16.0 mm² 1x 14 – 6 AWG
Flexible without end sleeve	2x 1.0 – 2.5 mm² 2x 2.5 – 6.0 mm² 2x 18 – 14 AWG 2x 14 – 10 AWG	1x 1.0 – 6.0mm² 1x 18 –10 AWG	1x 4.0 – 25.0 mm² 1x 12 – 3 AWG
Torque specifications	Posidrive bit 2 UL: 2.0 Nm (17.7 lb-in) IEC: 1.5 – 2.0 Nm (13.3 – 17.7 lb-in)		Posidrive bit 2 UL: 2.5 Nm (22 lb-in) IEC: 2.5 – 3.0 Nm (22 – 26.6 lb-in)
Aperture for termination lug (fork or ring)	12.3 mm		n/a
Protective Earth (PE) connection	M5, 1.5 Nm (13.3 lb-in) M5 PE screw is not provided with the solid state relay. PE connection is required when product is intended to be used in Class 1 applications according to EN/IEC 61140		

Control connections					
Terminals	A1+, A2-			A1+, A2-, IN1, IN2, IN3, 11+, 12-, OUT	
Conductors	Use 60/75°C copper (Cu) conductors				
	RG..KKE, RG..KGE screw control terminal		RG..MKE spring plug control terminal	RG..P	
			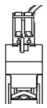	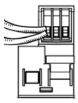	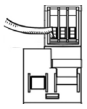
Connection type	M3 screw with captivated washer		Spring loaded	M3 screw with box clamp	
Stripping length	8 mm		12-13 mm	6 mm	
Rigid (solid & stranded) UL/cUL rated data	2x 0.5 - 2.5 mm² 2x 18 - 12 AWG	1x 0.5 - 2.5 mm² 1x 18 - 12 AWG	1x 0.2 - 2.5 mm² 1x 24 - 12 AWG	2x 1.0 - 2.5 mm² 2x 18 - 14 AWG	1x 1.0 - 2.5 mm² 1x 18 - 14 AWG
Flexible with end sleeve	2x 0.5 - 2.5 mm² 2x 18 - 12 AWG	1x 0.5 - 2.5 mm² 1x 18 - 12 AWG	-	2x 1.0 - 2.5 mm² 2x 18 - 14 AWG	1x 1.0 - 2.5 mm² 1x 18 - 14 AWG
Torque specification	Posidrive 1 UL: 0.5 Nm (4.4 lb-in), IEC: 0.5-0.6 Nm (4.4-5.3 lb-in)		-	Posidrive 1 UL: 0.5 Nm (4.4 lb-in), IEC: 0.4-0.5 Nm (3.5-4,4 lb-in)	

Bulk packaging option

- Packing qty.: 20 pcs.
- Total weight : 4.75 Kgs

Applicable only to RGC..15, RGC..25 and RGC..32 models

COPYRIGHT ©2021
Content subject to change. Download the PDF: https://gavazziautomation.com