schaffner MORE POWER TO YOU is now part of TE connectivity

Current-compensated Chokes

- Rated currents from 16 to 50 A
- Up to 600 VAC or 1000 VDC
- 2- and 3-wire configurations
- Horizontal and vertical PCB mounting types
- Ruggedized saturation and thermal behavior
- Open construction for forced and convection cooling
- Straightforward pin-out for easy PCB design

Performance indicators

Inductance value [mH]

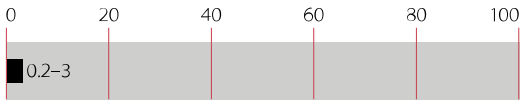

Rated current [A]

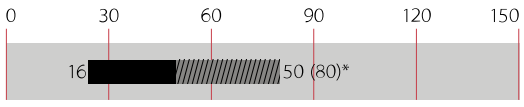

Approvals & Compliances

RoHS

RB common-mode chokes are mainly used to filter EMI noise on AC power lines up to 600 VAC but they are as well applicable in DC power lines of photovoltaic installations or similar applications up to 1000 VDC. EMI noise of electronic equipment can go to the power lines and disturb the proper function of other devices like TV sets or radios. Thus noise generated by the equipment from switched power electronics or by high slew rates of controllers needs to be filtered. RB common-mode chokes are used to suppress EMI noise in PCB integrated filter designs with line bypass capacitors or in combination with single phase filters for extra low leakage filter designs.

Features and Benefits

- Cost-effective PCB designs for up to 80 A with forced cooling*
- Compact size and light weight
- Low magnetic leakage flux
- Excellent winding insulation
- Standardized foot print
- Broad range of inductance ratings
- Custom-specific versions on request
- Evaluation Board and PCB footprints available

*See application note for forced cooling

Typical Applications

- AC and DC filtering for midsize power range drives, photovoltaic inverters, fast chargers, charging stations, UPS and switch mode power supplies
- Filter with low leakage current noise or improved immunity against grid disturbances
- Electronic devices, automation
- Converters

Technical Specifications

Rated currents	16 to 50 A @ 60°C convection cooling
Operating frequency	DC to 400 Hz
High potential test voltage	
Rated inductance	0.2 to 3 MILLIHENRY
Operating voltage	600 VAC 1000 VDC
Temperature range (operation and storage)	-40°C to +125°C (40/125/21) acc. IEC 60068-1
Cooling	convection/forced cooling
Flammability corresponding to	UL 94 V-0
MTBF (Mil-HB-217F)	>5,000,000 h @ 50°C/400 V

Typical electrical schematic

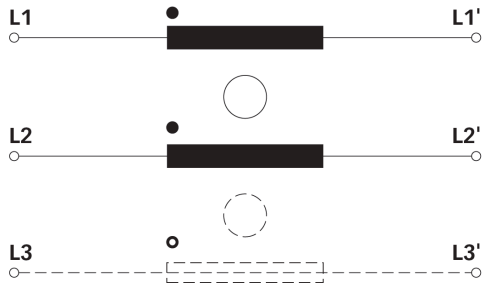

RB Series

Selection table	Buy	convection cooling nominal current @ 60˚C [A]	*forced cooling 3 m/s nominal current @ 60˚C [A]	Inductance Ln @ 25˚C [mH/path]	Inductance Ls @ 25˚C [µH/path]	Resistance R @ 25˚C [mΩ/path]	**Choke [size]	Ø Pin D [mm]	Length Pin L [mm]	Weight [g]	Eval. Board No.
RB6122-16-1M0		16	25	1.00	6.3	4.8	1	2.0 ±0.1	4.5 +0.5/-0	130	1
RB6122-25-0M6		25	39	0.64	4.0	2.7	1	2.4 ±0.1	4.5 +0.5/-0	135	1
RB6122-36-0M5		36	53	0.45	3.6	1.5	2	2.2 ±0.1	4.5 +0.5/-0	180	1
RB6122-50-0M3		50	80	0.25	1.8	0.9	2	2.5 ±0.1	5.0 +0.5/-0	172	1
RB6522-16-1M0		16	25	1.00	6.2	4.6	3	2.0 ±0.1	4.5 +0.5/-0	132	2
RB6522-25-0M6		25	39	0.64	3.9	2.6	3	2.4 ±0.1	4.5 +0.5/-0	126	2
RB6522-36-0M5		36	53	0.45	3.6	1.5	4	2.2 ±0.1	4.5 +0.5/-0	180	2
RB6522-50-0M3		50	80	0.25	2.0	0.9	4	2.5 ±0.1	5.0 +0.5/-0	175	2
RB8522-16-3M0		16	25	3.00	22.2	8.4	4	2.0 ±0.1	4.5 +0.5/-0	172	3
RB8522-25-2M0		25	39	2.00	13.6	4.2	5	2.65 ±0.1	5.0 +0.5/-0	268	3
RB8522-36-1M5		36	53	1.50	12.8	3.0	6	2.2 ±0.1	4.5 +0.5/-0	440	3
RB8522-50-0M8		50	83	0.75	6.5	1.7	6	2.5 ±0.1	5.0 +0.5/-0	430	3
RB6132-16-0M8		16	26.5	0.80	5.8	4.6	7	2.0 ±0.1	4.5 +0.5/-0	162	4
RB6132-25-0M5		25	41	0.47	3.3	2.4	7	2.5 ±0.1	5.0 +0.5/-0	175	4
RB6132-36-0M4		36	60	0.42	2.9	1.4	8	2.2 ±0.1	4.5 +0.5/-0	278	5
RB6132-50-0M2		50	80	0.18	1.9	0.9	8	2.5 ±0.1	5.0 +0.5/-0	765	5
RB6532-16-0M8		16	26.5	0.80	6.9	4.7	9	2.0 ±0.1	4.5 +0.5/-0	165	6
RB6532-25-0M5		25	41	0.47	3.6	2.4	9	2.5 ±0.1	5.0 +0.5/-0	180	6
RB6532-36-0M4		36	60	0.42	4.2	1.5	10	2.2 ±0.1	4.5 +0.5/-0	280	6
RB6532-50-0M2		50	81	0.18	1.5	0.8	10	2.5 ±0.1	5.0 +0.5/-0	168	6
RB8532-16-1M3		16	27	1.30	9.1	5.7	9	2.0 ±0.1	4.5 +0.5/-0	167	7
RB8532-25-0M9		25	41	0.94	6.7	3.0	11	2.65 ±0.1	5.0 +0.5/-0	282	7
RB8532-36-0M8		36	58	0.83	7.3	2.3	12	2.2 ±0.1	4.5 +0.5/-0	478	7
RB8532-50-0M3		50	82	0.33	3.1	1.2	12	2.5 ±0.1	5.0 +0.5/-0	442	7

Test conditions:
Measuring frequency: 1 kHz; 500 µA >0.16 mH <1.6 mH; 50 µA >1.6 mH <160 mH
Inductance tolerance: +50%, –30%
Resistance tolerance: ±15% @ 25°C
Electrical characteristics @ 25°C: ±2°C

* typical current for forced cooling with 3 m/s. Due to the possible turbulences and degradation of the air stream within an equipment please consider thermal
validation.

** Due to manufacturing processes and to cover current ampacity of chokes with high current rating, the number of parallel wires does vary between different sizes.

Typical Choke Attenuation/Resonance Frequency Characteristics

Per CISPR 17; 50 Ω/50 Ω asym

RB 6122, RB 6522

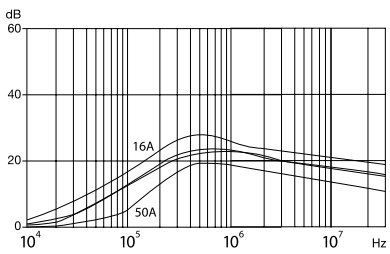

RB 6132, RB 6532

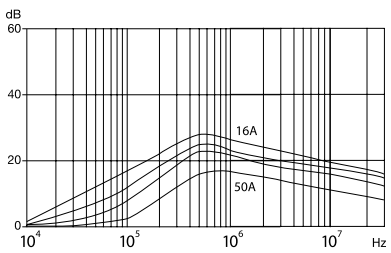

RB 8522

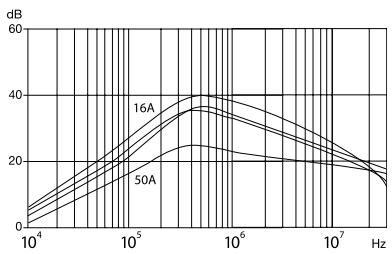

RB 8532

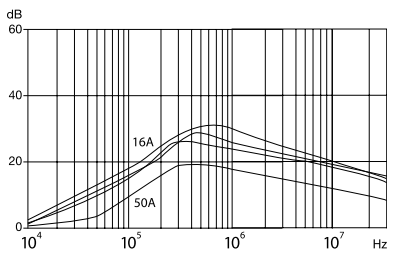

Product selector

RB xxxx-xx-xmx

- Inductance value (e.g. 9M6 = 9.6 mH)
- Nominal input current [A] (convection cooling)
- Terminal type (2 for PCB pin)
- 2 = 2-wire choke
  3 = 3-wire choke
- 1 = Horizonzal
  5 = Vertical
- 8 = high inductance series
  6 = low inductance series
- Schaffner standard ring-core choke series RB

Thermal Derating

If higher ambient temperatures than the specified apply, the nominal current needs to be reduced according to the graph below.

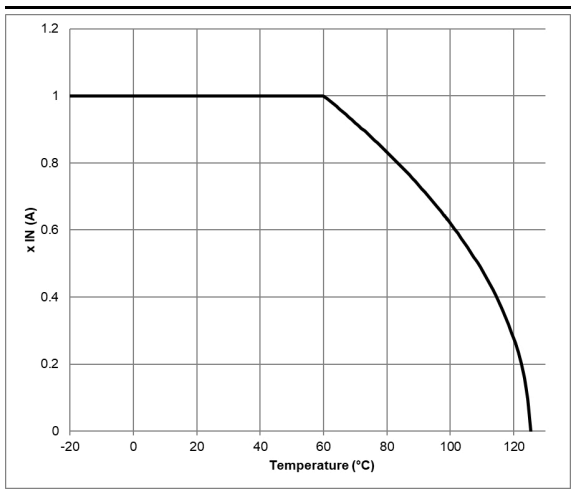

Examples:

RB 8532-16-1M3: Vertical 3-wire high inductance choke with PCB pins, for 16 A, with 1.3 mH

RB 6122-50-0M3: Horizontal 2-wire low inductance choke with PCB pins, for 50 A, with 0.3 mH

Mechanical Data: 1-phase / DC Chokes

All dimensions in mm; 1 inch = 25.4 mm
Tolerances according: ISO 2768-m/EN 22768-m
Windings of chokes are within max. component dimensions. Windings are illustrated simplified.

Size 1 (RB 6122)

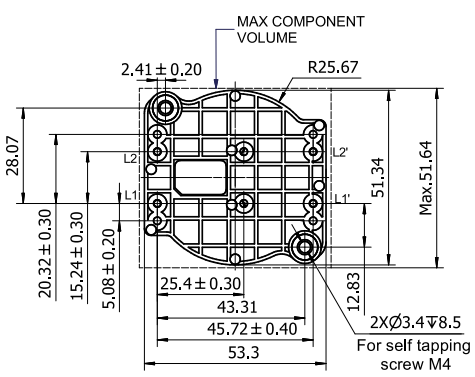

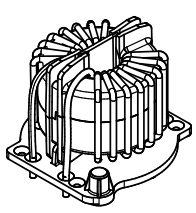

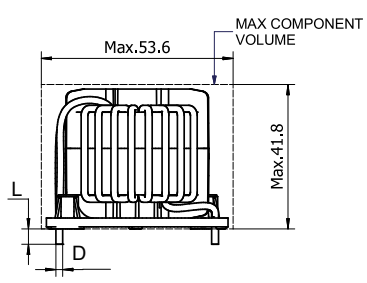

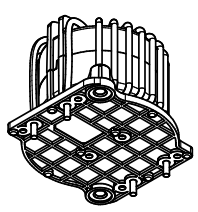

Size 2 (RB 6122)

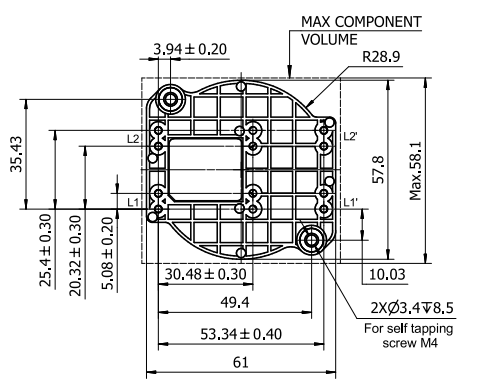

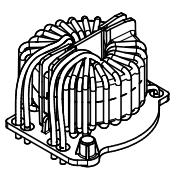

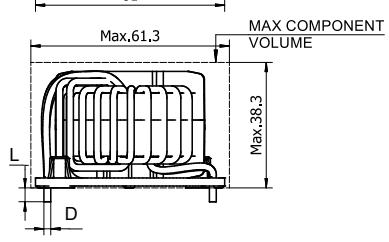

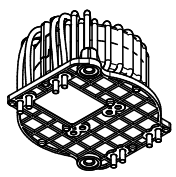

Size 3 (RB 6522)

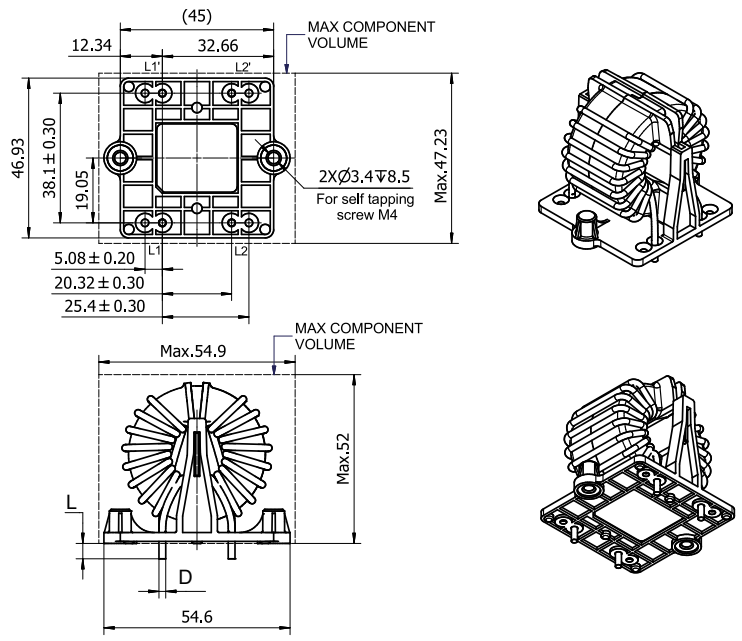

Size 4 (RB 6522/RB 8522)*

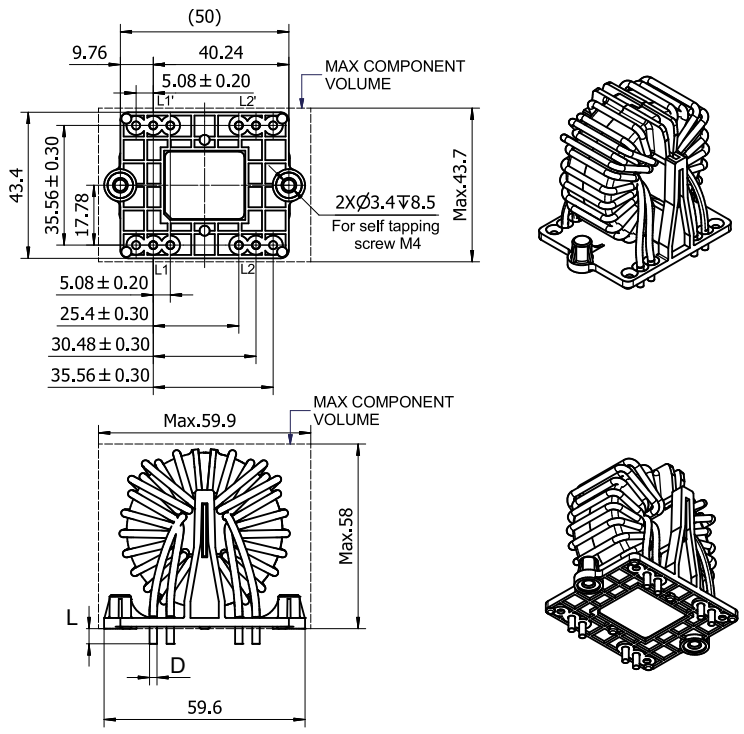

Size 5 (RB 8522)

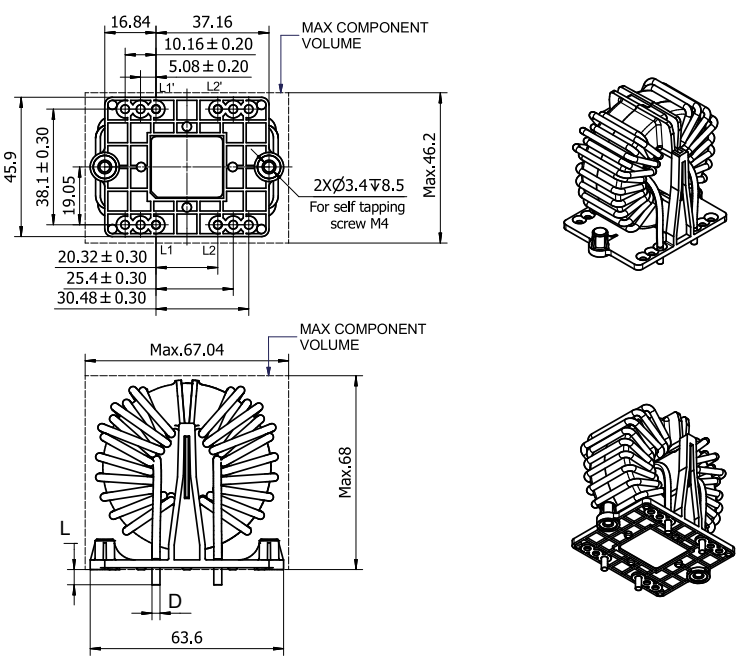

Size 6 (RB 8522)*

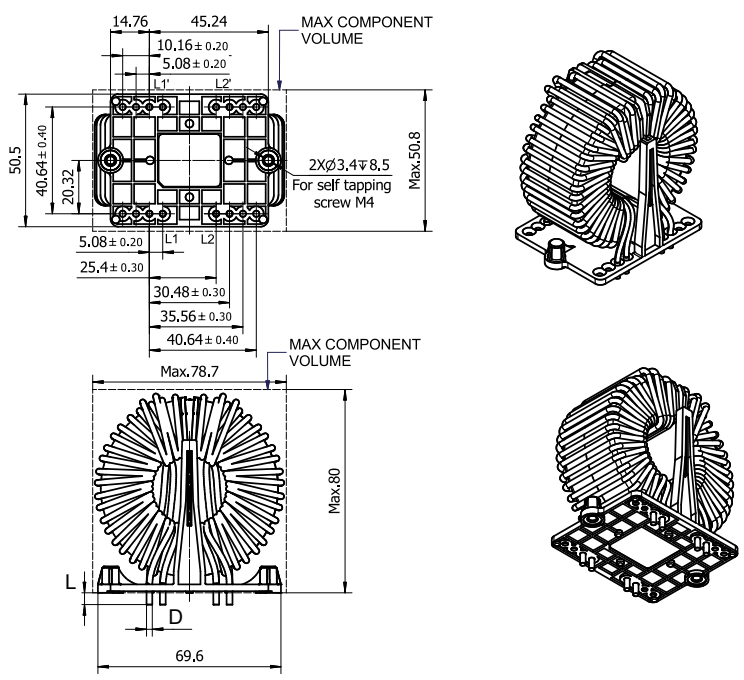

* These choke sizes do have two parallel wires. Due to manufacturing processes and to cover current ampacity of chokes with high current rating, the number of parallel wires does vary between different sizes.

Mechanical Data: 3-phase Chokes

All dimensions in mm; 1 inch = 25.4 mm
Tolerances according: ISO 2768-m/EN 22768-m
Windings of chokes are within max. component dimensions. Windings are illustrated simplified.

Size 7 (RB 6132)

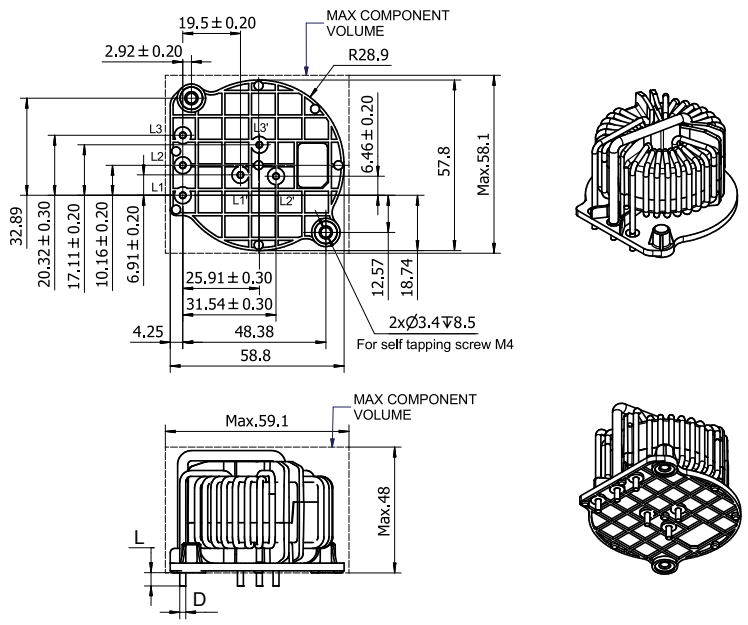

Size 8 (RB 6132)*

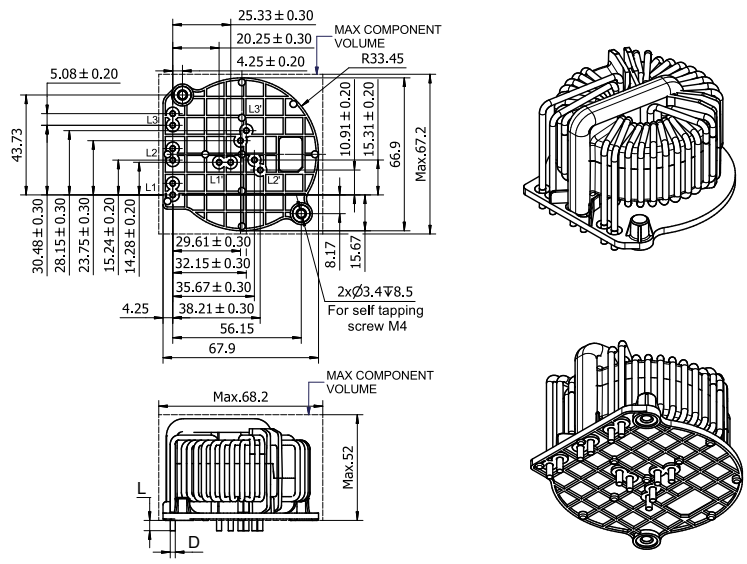

Size 9 (RB 6532/RB 8532)

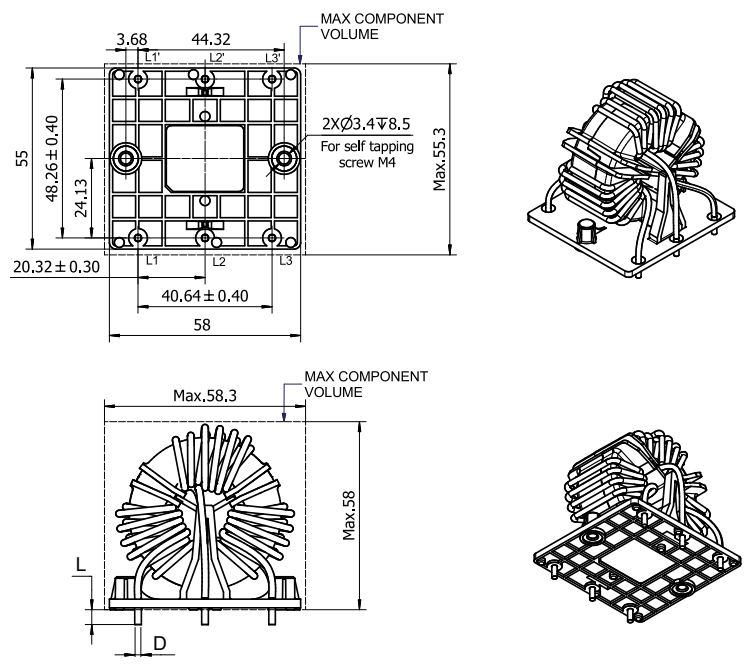

Size 10 (RB 6532)*

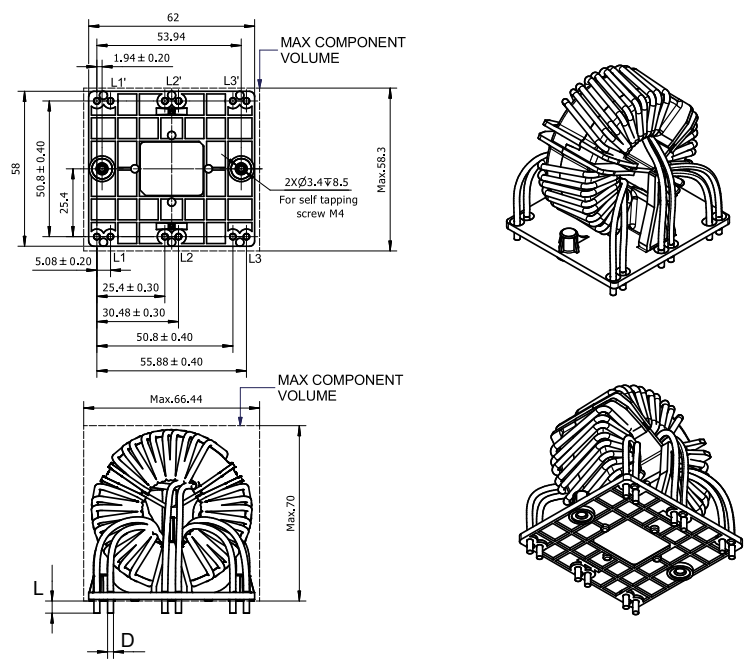

Size 11 (RB 8532)

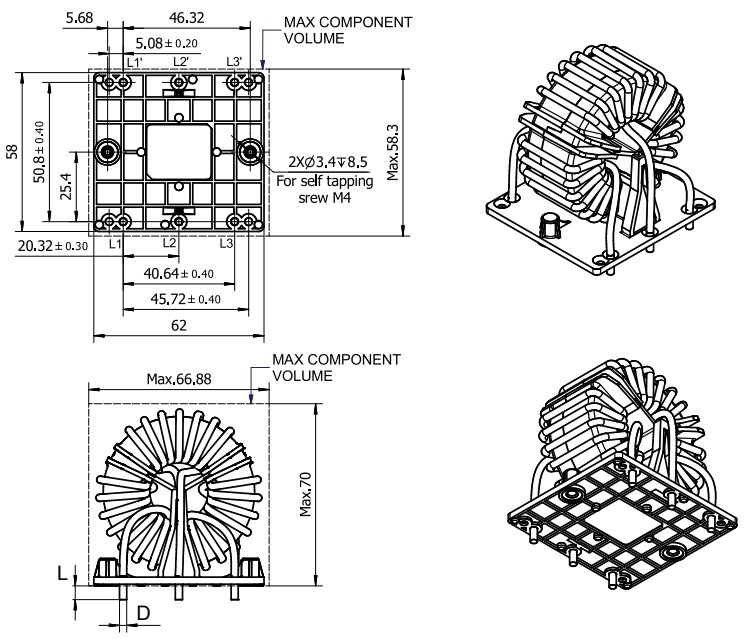

Size 12 (RB 8532)*

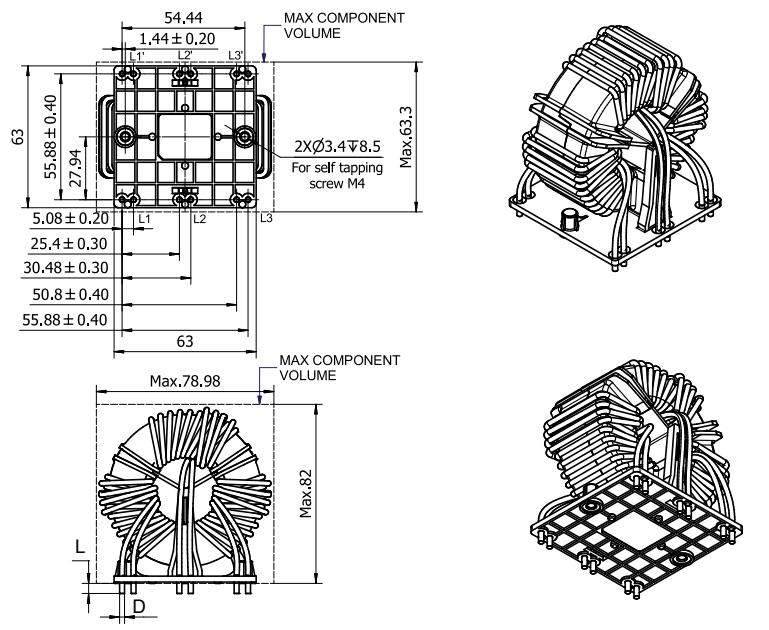

* These choke sizes do have two parallel wires. Due to manufacturing processes and to cover current ampacity of chokes with high current rating, the number of parallel wires does vary between different sizes.

Available Supporting Material

Accessories

For all RB choke types an evaluationboard is available (not including capacitors and RB chokes)

All boards feature voltage ratings according to the chokes usable on the board - up to 600VAC/ 1000VDC.

The capacitors used need to be selected according to application and safety level.
Recommended are Y1 and X1 capacitors with a voltage rating of at least 600VAC and 1000VDC.

The pitch for Y-capacitors (between phase and PE) is 15 or 22.5 mm. With a max outer dimnesion of 12 x 26 mm (w x l).
The pitch for X-capacitors (between phases) is 22.5, 27.5 or 37.5 mm. With a max outer dimnesion of 28 x 40 mm (w x l).
For discharge reason a resistor can be fitted in parallel to the X-capacitors.

All connections to the boards are done with M6 screw terminals (recommended torque is 2.5 Nm.

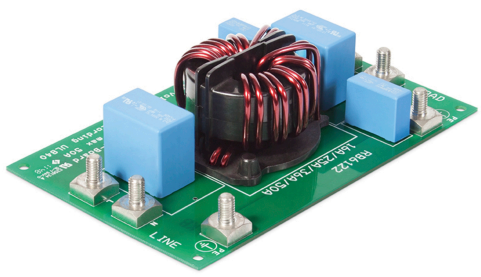

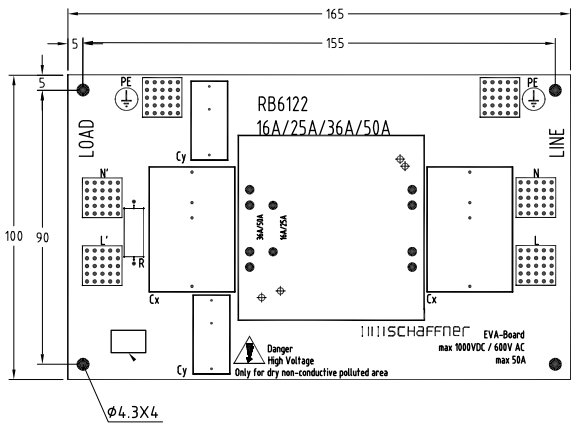

For further drawings and CAD data of the different boards please contact your local Schaffner subsidary.

Selection table RB Choke Type [RB XXXX]	Nom. Current of RB Choke [Range A]	Eval. Board No	Order Name	Order Code
RB 6122	16 - 50	1	EVA-BOARD FOR RB6122 SERIES	813249
RB 6522	16 - 50	2	EVA-BOARD FOR RB6522 SERIES	813252
RB 8522	16 - 50	3	EVA-BOARD FOR RB8522 SERIES	813254
RB 6132	16 - 25	4	EVA-BOARD FOR RB6132-16/25	813250
RB 6132	36 - 50	5	EVA-BOARD FOR RB6132-36/50	813251
RB 6532	16 - 50	6	EVA-BOARD FOR RB6532 SERIES	813253
RB 8532	16 - 50	7	EVA-BOARD FOR RB8532 SERIES	813255

Application Note

EMC/EMI Filter Design with RB Common Mode-Chokes

This application note addresses experienced engineers, who are familiar with the basics of EMC, and intends to provide additional information about RB choke series and Design support for PCB integrated EMC/EMI filters.

Link to PDF

Headquarters, Global Innovation and Development

Switzerland
Schaffner Group
Industrie Nord
Nordstrasse 5
4542
Luterbach
+41 32 681 66 26
info@schaffner.com

To find your local partner within Schaffner's global network schaffner.com

© 2025 Schaffner Group

The content of this document has been carefully checked and understood. However, neither Schaffner nor its subsidiaries assume any liability whatsoever for any errors or inaccuracies of this document and the consequences thereof. Published specifica-tionsw are subject to change without notice. Product suitability for any area of application must ultimately be determined by the customer. In all cases, products must never be operated outside their published specifications. Schaffner does not guarantee the availability of all published products. This disclaimer shall be governed by substantive Swiss law and resulting disputes shall be settled by the courts at the place of business of Schaffner Holding AG. Latest publications and a complete disclaimer can be downloa-ded from the Schaffner website. All trademarks recognized.

Sales and Application Centers

Finland
Schaffner Oy
Lohjanharjuntie 1109
08500
Lohja
+ 358 50 468 72 84
finlandsales@schaffner.com

France
Schaffner EMC S.A.S.
16-20 Rue Louis Rameau
95875
Bezons
+33 1 34 34 30 60
francesales@schaffner.com

Germany
Schaffner Deutschland GmbH
Ohiostr. 8
76149
Karlsruhe
+49 721 56910
germanysales@schaffner.com

Italy
Schaffner EMC S.r.l.
Via Ticino, 30
20900
Monza (MB)
+39 335 120 44 32
italysales@schaffner.com

Japan
Schaffner EMC K.K.
ISM Sangenjaya 7F
1-32-12 Kamiuma Setagaya-ku
154-0011
Tokyo
+81 3 5712 3650
japansales@schaffner.com

Singapore
Schaffner EMC Pte Ltd.
Blk 3015A Ubi Road 1 #05-09 Kampong Ubi Industrial Estate
408705
Singapore
+65 63773283
singaporesales@schaffner.com

Sweden
Schaffner EMC AB
Östermalmstrorg 1
114 42
Stockholm
+46 8 5050 2425
swedensales@schaffner.com

Switzerland
Schaffner EMV AG
Industrie Nord
Nordstrasse 5
4542
Luterbach
+41 32 681 66 26
switzerlandsales@schaffner.com

India
Schaffner India Pvt. Ltd
Regus World Trade Centre
WTC 22nd Floor Unit No 2238 Brigade Gateway Campus 26/1 Dr. Rajkumar Road
Malleshwaram (W)
560055
Bangalore
+91 8067935355
indiasales@schaffner.com

United Kingdom
Schaffner Ltd.
Suite 1 Oakmede Place
Terrace Road
RG42 4JF
Binfield
+44 118 9770070
schaffner.uksales@te.com

United States
Schaffner EMC Inc.
52 Mayfield Avenue
Edison, New Jersey
+1 732 225 9533
usasales@schaffner.com