QHL75 Series

XP Power

75W BASEPLATE COOLED

DC-DC CONVERTER

The QHL75 series offers a compact 75W DC-DC solution in an industry standard quarter brick package. This series of modules enables effective construction of distributed power architectures from AC front ends, PFC front ends and battery systems. Utilizing the integral baseplate for conduction cooling gives the designer flexibility in system design. Constructed with reinforced insulation, the QHL series features an industrial operating temperature range and includes protection for over current, over temperature and over voltage.

Features

- 180 - 450VDC Input Range
- Baseplate cooled
- Industry standard ¼ brick package
- Regulated single outputs from 5 to 48VDC
- Output voltage trim ±20% (5V: -20%/+10%)
- 3.0kVAC reinforced isolation
- Efficiency up to 90%
- Short circuit, overvoltage & overtemperature protection
- Remote On/Off
- -40°C to +105°C operating temperature
- 3 year warranty

Applications

Industrial Electronics & Robotics

LED Lighting

Technology

Dimensions

2.28” x 1.45” x 0.50” (57.9 x 36.8 x 12.7 mm)

Models & Ratings

Model Number	Input Voltage	Output Voltage	Output Current	Input Current[1]		Ripple & Noise pk-pk[2]	Efficiency at Vin Nominal with Full Load	Maximum Capacitive Load
				No Load	Full Load at Vin Nominal			
QHL75300S05	300VDC (180-450VDC)	5V	15.0A	10mA	0.30A	100mV	82%	15000µF
QHL75300S12		12V	6.25A		0.28A	150mV	88%	6250µF
QHL75300S15		15V	5.0A		0.28A	150mV	90%	5000µF
QHL75300S24		24V	3.12A		0.28A	240mV	90%	3300µF
QHL75300S48		48V	1.56A		0.28A	480mV	89%	1000µF

Notes:

1. Measured at 300VDC nominal input.
2. Peak to peak measured at 20MHz bandwidth and i) 10µF aluminum and 1µF ceramic capacitor across output for 48V model
   ii) 10µF tantalum and 1µF ceramic capacitor across output for all other models
3. Recommended input capacitance of 66µF required to reduce input ripple voltage at -40°C operation or 33µF for operation to -20°C. See application notes.
4. Optional M3 x 0.5 threaded baseplate fixing add suffix -T.
5. Optional negative logic add suffix -N for module enable/disable function. See output table.

Input

Characteristic	Minimum	Typical	Maximum	Units	Notes & Conditions
Input Voltage Range	180		450	VDC	
Input Current				mA	See Models & Ratings table
Undervoltage Lockout		170		VDC	On
		160			Off
Lockout Hysteresis		10		VDC	
Input Transient Voltage			500	VDC	For 100ms
Idle Current		10		mA	No load
Standby Mode		0.3		mA	When module inhibited
Inrush Current			0.1	A^2S	ETS300 132-2
Recommended Input Fuse		1		A	Time delay type, see application note
Input Reflected Ripple Current		30		mA pk-pk	Through 12µH inductor

Output

Characteristic	Minimum	Typical	Maximum	Units	Notes & Conditions
Output Voltage	5		48	VDC	
Output Trim	-20		+10/+20	%	5V limited to +10%
Initial Set Accuracy			±1	%	At full load
Minimum Load	0			%	No minimum load required
Line Regulation			±0.2	%	From minimum to maximum input at full load
Load Regulation			±0.2	%	From 0% to full load
Transient Response			±5.0	%	Maximum deviation, recovering to less than 1% in 250µs for 25% step load change.
Start Up Time		30		ms	
Output Voltage Rise Time		30		ms	
Ripple & Noise	See Models & Ratings table				
Overload Protection	110	125	160	%	Hiccup mode, with auto recovery
Short Circuit Protection	Continuous hiccup mode, with auto recovery				
Maximum Capacitive Load	See Models & Ratings table				
Temperature Coefficient			±0.02	%/ °C	
Overvoltage Protection	115/122		130	%	5V output / other models. Of nominal output voltage. Non latching clamp.
Remote On/Off	Output is 'ON' if remote on/off (pin 2) is open or high (3.5-75VDC) with respect to pin 3 or -Vin Output turns 'OFF' if remote on/off (pin 2) is low (<1.2VDC max) with respect to pin 3 or -Vin Control current is typically 0.3mA. Default is positive logic, negative logic option available.				

General

Characteristic	Minimum	Typical	Maximum	Units	Notes & Conditions
Efficiency		88		%	See Models & Ratings table
Isolation: Input to Output	3000			VAC	60s reinforced
	4200			VDC	
Isolation: Input to Case	2500			VAC	60s basic
	3500			VDC	
Isolation: Output to Case	500			VAC	60s functional
	700			VDC	
Isolation Resistance	100			MΩ	Input to output
Isolation Capacitance		333		pF	Input to output
		4400			Output to case
Switching Frequency	270	300	330	kHz	Fixed PWM
Case Material	Plastic (DAP) with aluminium base plate. UL94V-0 rated. Meets EN45545-2				
Potting Material	Epoxy UL94V-0				
Fire & Safety	Complies with EN45545-2				
Pin Material	Copper with nickel and matte tin plate				
Solder Profile			260	°C	With iron 450°C, 5s max. 1.5mm from case 10s max
Water Wash	Use deionized water, do not soak. Dry thoroughly				
Power Density			45	W/in^3	
Mean Time Between Failure	1000			khrs	48V model, MIL-HDBK-217F, +25°C GB
	850				All other models, MIL-HDBK-217F, +25°C GB
Weight		0.1943 (65.0)		lb (g)	

Environmental

Characteristic	Minimum	Typical	Maximum	Units	Notes & Conditions
Operating Base Plate Temperature	-40		+105	°C	
Storage Temperature	-55		+125	°C	
Thermal Protection		+110		°C	Auto recovery at 95°C typical
Humidity			95	%RH	Non-condensing
Cooling	Baseplate-cooled				
Operating Altitude			3000	m	Storage to 12000m
Shock and Vibration	EN61373/MIL-STD-810F, reference standards				

Safety Approvals

Safety Agency	Standard	Notes & Conditions
UL	UL/cUL62368-1	ITE pending
CE	Meets all applicable directives	Evaluated to EN62368-1
UKCA	Meets all applicable legislation	

EMC: Emissions

Phenomenon	Standard	Test Level	Notes & Conditions
Conducted	EN55032	Class A	See application notes
Radiated	EN55032	Class A	See application notes

EMC: Immunity

Phenomenon	Standard	Test Level	Criteria	Notes & Conditions
ESD Immunity	EN61000-4-2	±6kV/±8kV	A	Contact Discharge/Air Discharge, Level 3
Radiated Immunity	EN61000-4-3	20v/m	A	Level 3
EFT/Burst	EN61000-4-4	±2kV	A	Level 3. See application notes
Surge	EN61000-4-5	±2kV	A	Line to line. See application notes
		±4kV		Line to earth. See application notes
Conducted Immunity	EN61000-4-6	10Vrms	A	
Magnetic Fields	EN61000-4-8	3A/m rms	A	

Mechanical Details

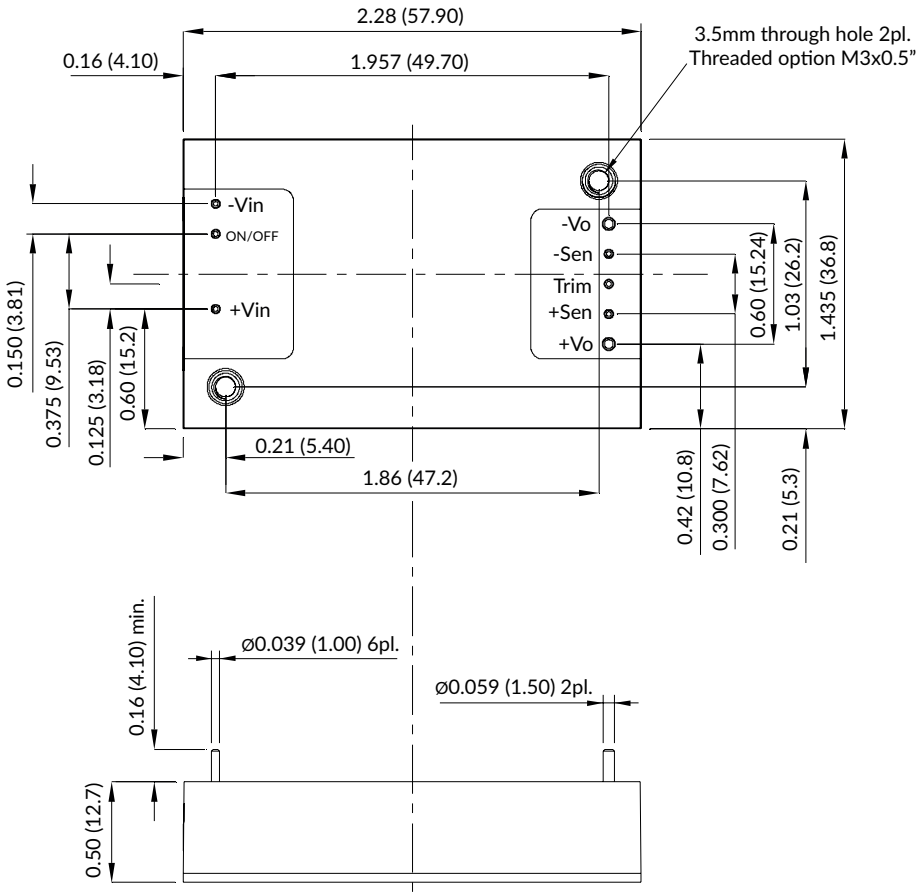

Pin Connections	
Pin	**Function**
1	+Vin
2	Remote On/Off
3	-Vin
4	-Vout
5	-Sense
6	Trim
7	+Sense
8	+Vout

Notes:

1. All dimensions are in inches (mm)
2. Weight: 0.143 lbs (65.0 g) approx.
3. Tolerance: x.xx = ±0.02 (x.x = ±0.5)
   x.xxx = ±0.01 (x.xx = ±0.25)
4. Suggest fixing points torque 0.294N-m (3Kgf-cm)

Application Notes

Input Fusing and Safety Considerations

The QHL75 series converters have no internal fuse. For safety and system protection, always use an input line fuse. A 1.0A time delay fuse is recommended. It is also recommended the circuit has a transient voltage suppressor diode (TVS) across the input terminals to protect the unit against surges, spikes and input reverse voltage (as shown). A suitable part is SMCJ440A.

Output Voltage Sensing

The module will automatically trim the output voltage via the sense pins to the default values either locally or at the load. If not required, the sense pins should be connected locally as indicated in the example EMC circuit.

Output Voltage Adjustment

The Trim input permits the user to adjust the output voltage up by 20% or down by +20% (5V output model limited to +10%). This is accomplished by connecting an external resistor between the Trim pin and -sense to trim up, or between the trim pin and +sense to trim down.

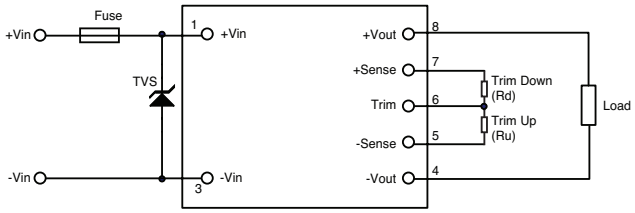

To Trim Down (Rd)

Trim Down %	5V	12V	15V	24V	48V
			Rd KΩ		
1	86.70	389.67	563.96	929.51	1715.62
2	41.70	148.43	271.43	447.25	821.86
3	26.70	118.69	173.92	286.5	523.94
4	19.20	84.82	125.17	206.13	274.98
5	14.70	64.49	95.91	157.90	285.60
6	11.70	50.94	76.41	125.75	226.02
7	9.56	41.27	64.48	102.79	183.46
8	7.95	34.01	52.03	85.56	151.54
9	6.70	28.36	43.91	72.17	126.71
10	5.70	23.85	37.41	61.45	106.85
11	4.88	20.15	32.09	52.68	90.60
12	4.20	17.07	27.66	45.38	77.06
13	3.62	14.47	23.9	39.19	65.60
14	3.13	12.23	20.69	33.89	55.78
15	2.70	10.30	17.90	29.30	47.27
16	2.33	8.60	15.47	25.28	39.82
17	1.99	7.11	13.32	21.74	33.25
18	1.70	5.78	11.40	18.58	27.41
19	1.44	4.59	9.69	15.76	22.18
20	1.20	3.52	8.15	13.23	17.48

To Trim Up (Ru)

Trim Up %	5V	12V	15V	24V	48V
			Ru KΩ		
1	27.90	263.20	313.26	515.62	1040.52
2	12.90	126.60	150.63	247.81	498.66
3	7.90	81.10	96.42	158.54	318.04
4	5.40	58.30	69.31	113.91	227.73
5	3.90	44.60	53.05	81.12	173.54
6	2.90	35.50	42.21	69.27	137.42
7	2.19	29.00	34.47	56.52	111.62
8	1.65	24.10	28.66	46.95	92.27
9	1.23	20.40	24.14	39.51	77.21
10	0.90	17.30	20.53	33.56	65.17
11	-	14.80	17.57	28.69	55.32
12	-	12.80	15.10	24.64	47.11
13	-	11.00	13.02	21.20	40.16
14	-	9.50	11.23	18.26	34.21
15	-	8.20	9.68	15.71	29.05
16	-	7.10	8.33	13.48	24.53
17	-	6.10	7.13	11.51	20.55
18	-	5.20	6.07	9.76	17.01
19	-	4.40	5.12	8.19	13.84
20	-	3.70	4.26	6.78	10.99

Application Notes

Thermal Resistance Information

Airflow Derating Graph - Without Heatsink

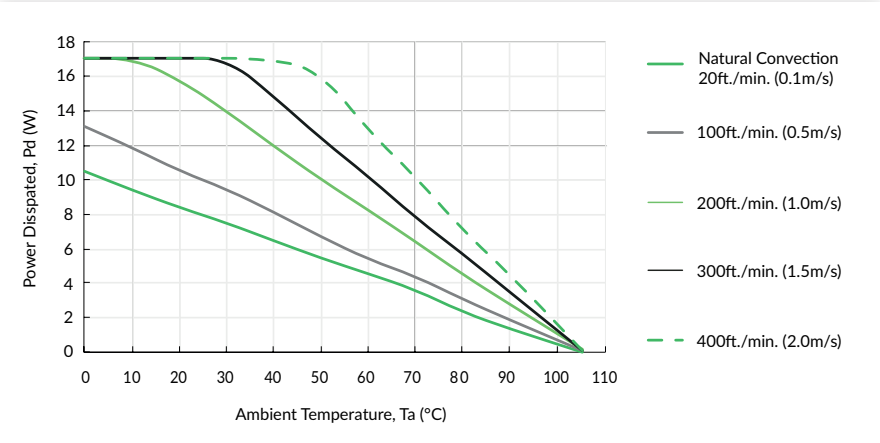

Air Flow Rate	Typical Rca
Natural Convection 20ft/min (0.1m/s)	10.1°C/W
100ft/min (0.5m/s)	8.0°C/W
200ft/min (1.0m/s)	5.4°C/W
300ft/min (1.5m/s)	4.4°C/W
400ft/min (2.0m/s)	3.4°C/W

Example (Without Heatsink)

To determine the minimum airflow necessary for a QHL75300S12 operating at an input voltage of 300V, an output current of 6.25A, and a maximum ambient temperature of 40°C:

Determine Power dissipation (Pd) Pd = Pi-Po = Po(1-η)/η,

Pd = 12V × 6.25A × (1-0.88) / 0.88 = 10.22
Where Pi = Input power, Po = Output Power and η = Efficiency
Determine airflow from airflow derating graph using data points for Pd = 10.22W and Ta = 40°C
Minimum airflow = 200ft./min.

To check that the maximum case temp of 105°C is not exceeded:

Maximum temperature rise is
ΔT = Pd × Rca= 10.22 x 3.40 = 34.75°C.
Maximum case temperature is
Tc = Ta + Δ T = 40 + 34.75 = 74.75°C <105°C.
Where: Rca is the thermal resistance from case to ambient environment. Ta is ambient temperature and Tc is case temperature.

Example Efficiency Curve

Example based on QHL75300S12

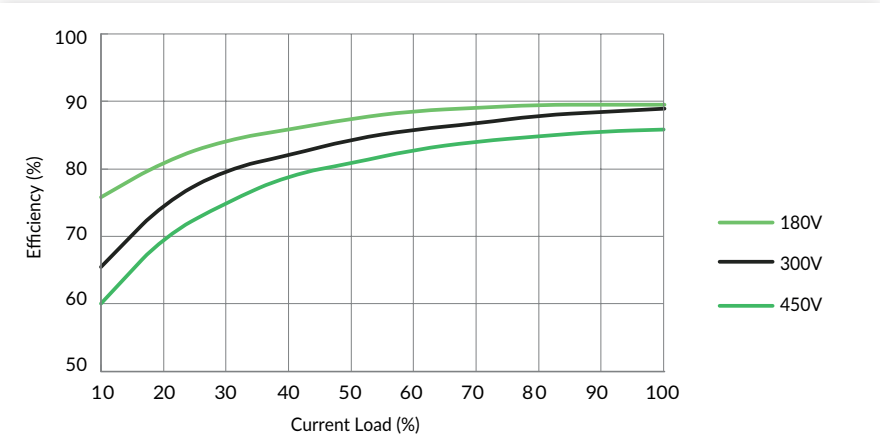

Application Notes

Conducted and Radiated Emissions - Class A recommended EMC circuit

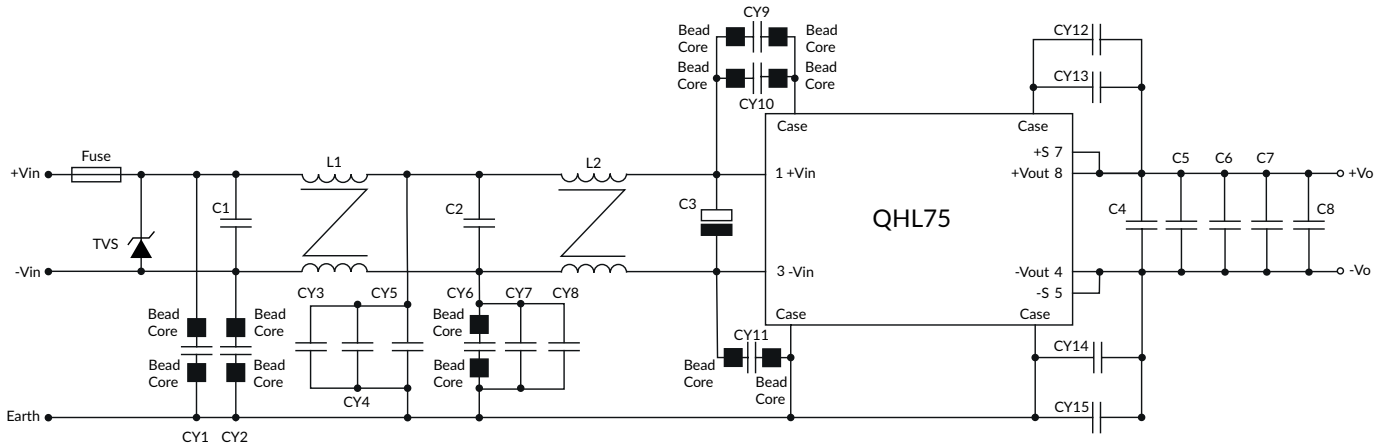

Component	Output Voltage				
	5V	12V	15V	24V	48V
C1	0.33µF, 630VDC Polyester Film				
C2	0.1µF, 630VDC 1812 X7R				
C3	Recommended 68µF, 550V, aluminium capacitor for operation to -40°C type Nippon Chemi-Con KXG Series or equivalent. The value of C3 can be reduced to 33µF for operation to -20°C.				
C4, C5	47µF, 6.3V 1812 MLCC	4.7µF, 100V 1812 MLCC			
C6, 7, 8	100µF, 6.3V 1210 MLCC	2.2µF, 100V 1210 MLCC			
CY1	100pF	220pF	NC	220pF	100pF
CY2	100pF				
CY3	470pF	NC			
CY4	NC	470pF		680pF	
CY5	100pF				
CY6	220pF				
CY7	NC	470pF		680pF	
CY8	470pF	NC			
CY9	100pF	NC			
CY10, 11	220pF	100pF	100pF	NC	100pF
CY12, 13, 14, 15	4700pF				
L1, L2	5mH Common Choke, 0.25 x 1.0mm, 34T				
Fuse	1A time delay				
TVS	1.5kW 500V 2A example 1.5KE550CA				
Bead core	Bead Core 2.8*1.7*2 SM, T2.8 x 1.7 x 1.2 SM				