REV.	ECN NO.	DATE	SIGN	DESCRIPTION
B	LEN1680170	2016/07/28	Aric Ko	Modify Drawing
C	C190342	2019/03/26	Ruru	Modify Note
D	C191096	2019/07/03	Angel Chou	Add Dimension

ALTW
CONFIDENTIAL
2019-07-03
R&D DEPT.

B

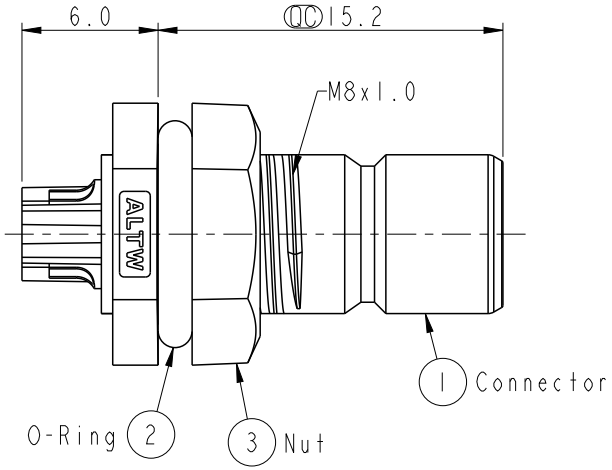

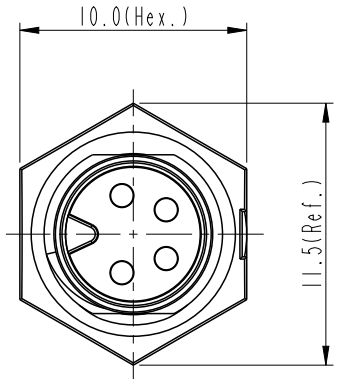

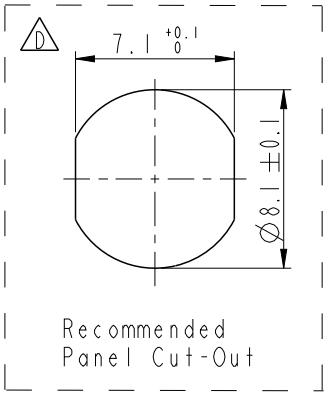

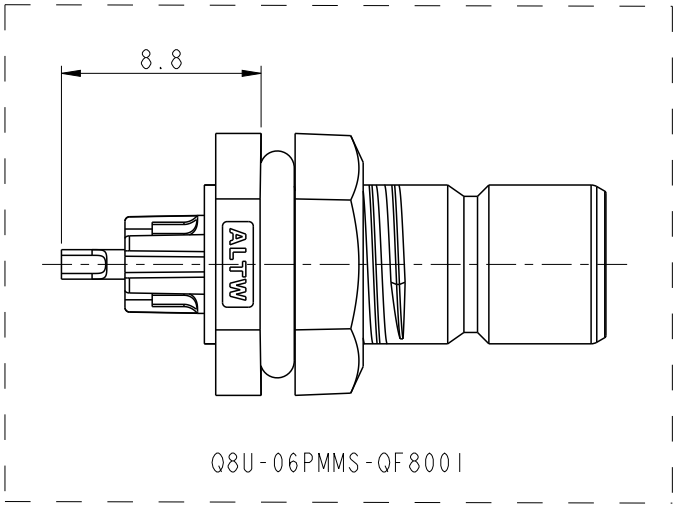

Note: C

* QC Important Dimension
* Waterproof Rate: IP68, Mated
  IM Depht of water in 24 hours
* Housing: Thermoplastic, Black
* Pin: Copper Alloy, Gold Plated
* Nut: Thermoplastic, Black
* O-Ring: Rubber, Black
* Panel Thickness: 0.8~2.0mm
* Nut are packed separately in PE bags

UNIT: mm

TOLERANCE
.X ±0.25
.XX ±0.1
.XXX ±0.05
ANGLES ±1°

TITLE	SIZE 8, RECEPTACLE(FRONT) HS-LOK, M CONN M PIN
SCALE	3:1
SIZE	A4
SHEET	1 OF 2
REV.	D
WC-REV.	A.7
QC: Inspection item	

Amphenol LTW
安費諾亮泰企業股份有限公司

ITEM NO		DRAWN BY Angel Chou	DATE 2019-07-03
DWG NO Q8XX-0XPMMS-QF8001		CHECKED BY Victor Hung	DATE 2019-07-03
CUSTOMER ALTW		APPROVED BY Max Yang	DATE 2019-07-03

WI0814-03-[redacted]01A2

THIS DOCUMENT IS SUBJECT TO CHANGE WITHOUT NOTICE. IT IS CONFIDENTIAL AND A PROPERTY OF Amphenol LTW. DISCLOSURE TO THIRD PARTY HAS TO BE AUTHORIZED BY Amphenol LTW.

B C

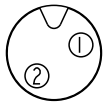

2 Contacts(02)
Wire Color Identification:
1.White, 2.Black

3 Contacts(03)
Wire Color Identification:
1.White, 2.Black, 3.Green

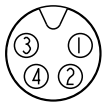

4 Contacts(04)
Wire Color Identification:
1.White, 2.Black, 3.Red, 4.Blue

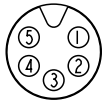

5 Contacts(05)
Wire Color Identification:
1.White, 2.Black, 3.Red, 4.Blue, 5.Green

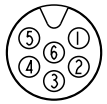

6 Contacts(06)
Wire Color Identification:
1.White, 2.Black, 3.Red, 4.Blue, 5.Green, 6.Brown

2+3 Contacts(05)
Wire Color Identification:
1.White, 2.Black, 3.Red, 4.Blue, 5.Green

Pin Assignments, Front View

ALTW
CONFIDENTIAL
2019-07-03
R&D DEPT.

Ordering Information:

Q8XX-0XPMMS-QF8001

D: 5A
U: 2A
DU: 5A+2A

Number of Contacts
02
⋮
06

Mating Connector:
Overmolded with Cable: Q8XX-0XAFFM-QL8AXX

UNIT:mm	TITLE B SIZE 8, RECEPTACLE(FRONT) HS-LOK, M CONN M PIN			ITEM NO	DRAWN BY Angel Chou	DATE 2019-07-03
TOLERANCE .X ±0.25 .XX ±0.1 .XXX ±0.05 ANGLES ±1°	SCALE 1:1	SIZE A4	SHEET 2 OF 2	DWG NO Q8XX-0XPMMS-QF8001	CHECKED BY Victor Hung	DATE 2019-07-03
	REV. D	WC-REV. A.2	QC: Inspection item	CUSTOMER ALTW	APPROVED BY Max Yang	DATE 2019-07-03

Amphenol LTW
安費諾亮泰企業股份有限公司

THIS DOCUMENT IS SUBJECT TO CHANGE WITHOUT NOTICE. IT IS CONFIDENTIAL AND A PROPERTY OF Amphenol LTW. DISCLOSURE TO THIRD PARTY HAS TO BE AUTHORIZED BY Amphenol LTW.