Q Series

XP Power

0.5W CONVECTION COOLED

DC-HVDC CONVERTER

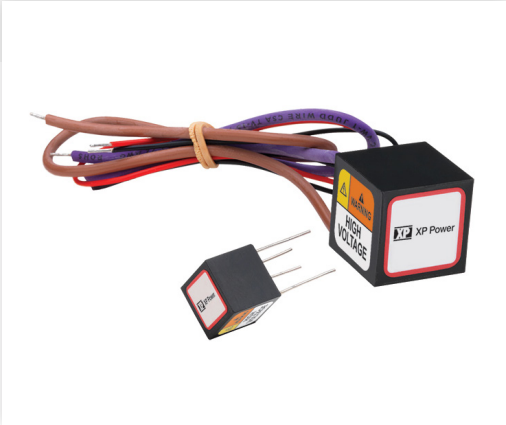

The Q Series is a broad line of ultra-miniature, high reliability DC to HV DC converters supplying up to 5,000 volts in only 0.125 cubic inches and up to 10,000 volts in only 0.614 cubic inches. Input voltage can be 5V, 12V, 15V, or 24V. The output is directly proportional to the input voltage and is linear from <0.7V input to maximum input voltage, allowing for an adjustable output voltage. Output is load dependent. Isolation permits <±500V bias on output return and output power is 0.5 watt.

No external components or minimum load are required. Variations include dual output (center-tap), a separate control pin, and an external shield. These component-sized converters operate over a wide temperature range making them ideal for portable, battery-powered equipment requiring minimal size and weight.

Features

- Output voltages from 100VDC to 10,000VDC
- Output proportional to input
- 0.7VDC turn-on voltage
- Wide operating temperature range
- Short circuit protection
- Low ripple <1%
- 500VDC input to output isolation
- No minimum load
- 3 year warranty

Typical Applications

- Avalanche Photo Diodes
- Photo Multiplier Tubes
- Piezo Devices
- Sustaining Ion Pumps
- Electrophoresis
- Igniters
- Capacitor Charging

Dimensions

Q01 - Q50:
0.50" x 0.50" x 0.50" (12.7 x 12.7 x 12.7mm)

Q60 - Q80:
0.85" x 0.85" x 0.85" (21.6 x 21.6 x 21.6mm)

Input

Characteristic	Minimum	Typical	Maximum	Units	Notes & Conditions
Input Voltage	0.7		5, 12, 15, 24	VDC	See Models and Ratings table
Input Current			400	mA	See Models and Ratings table
Control Voltage Input (optional)	Analog Control Voltage adjusts output from 0 to 100%, not to exceed Input Voltage, see Application Notes				

Output

Characteristic	Minimum	Typical	Maximum	Units	Notes & Conditions
Output Voltage			10,000	VDC	See Models and Ratings table
Output Current			5	mA	See Models and Ratings table
Output Voltage Tolerance		±10		%	At Max Vout, Full Load, measured from Pin 3 to Pin 4
Minimum Load	No minimum load required				
Regulation	Unregulated, output is proportional to input. See Application Notes				
Short Circuit Protection	1			minute	
Ripple and Noise	0.1		1	%	See Models and Ratings table

General

Characteristic	Minimum	Typical	Maximum	Units	Notes & Conditions
Isolation: Input to Output			500	V	< ±500VDC Bias on Output Return
Leakage Current			250	nA	
Switching Frequency	75		500	kHz	
Construction	Solid vacuum encapsulation, UL 94 V-0 rated.				
Mean Time Between Failure	3			Mhrs	Per Bellcore TR 332

Environmental

Characteristic	Minimum	Typical	Maximum	Units	Notes & Conditions
Operating Temperature (case)	-25		+70	°C	Q01 to Q20, standard operating temperature
Operating Temperature (case)	-55		+75	°C	Q01 to Q20, extended operating temperature
Operating Temperature (case)	-25		+60	°C	Q25 to Q50, standard operating temperature
Operating Temperature (case)	-55		+70	°C	Q25 to Q50, extended operating temperature
Operating Temperature (case)	-10		+60	°C	Q60 to Q101, standard operating temperature
Storage Temperature	-55		+105	°C	Q01 to Q50
Storage Temperature	-20		+105	°C	Q60 to Q101
Cooling	Natural convection				
Humidity			95	%RH	Non-condensing

Notes:

1. Maximum output current is available at maximum rated output voltage, and derates linearly as input voltage is decreased.
2. Output Voltage is load dependent. Under light or no-load conditions, reduce the Input Voltage so maximum rated Output Voltage is not exceeded.
3. Specifications are after 30 minute warm-up, full-load at 25°C, unless otherwise noted.
4. Proper thermal management techniques are required to maintain safe case temperature at maximum power output.
5. See page 9 for connection diagrams.
6. All orderable part numbers are listed on the data sheet.

Safety Approvals

Safety Agency	Standard	Notes & Conditions
UL	IEC/UL/CSA/EN 62368	
CE	CE Directive, RoHs and LVD	Where applicable
RoHS	RoHS 2 and 3 Directive (2011/65/EU)	Where applicable

Models & Ratings

Model Number	Output				Input		
	Output Voltage[2]	Output Current[1]	Ripple	Polarity[5]	Input Voltage	Input Current, No Load	Input Current, Full Load
Q01-5	0 to 100V	5.00mA	<1.0%	Reversible	5V	<100mA	<250mA
Q01-5C	0 to 100V	5.00mA	<1.0%	Reversible	5V	<100mA	<250mA
Q01CT-5	0 to ±50V	5.00mA	<1.0%	Dual	5V	<100mA	<250mA
Q01-12	0 to 100V	5.00mA	<1.0%	Reversible	12V	<40mA	<100mA
Q01-12CT	0 to 100V	5.00mA	<1.0%	Reversible	12V	<40mA	<100mA
Q01-12S	0 to 100V	5.00mA	<1.0%	Reversible	12V	<40mA	<100mA
Q01CT-12TS	0 to ±50V	5.00mA	<1.0%	Dual	12V	<40mA	<100mA
Q01-24	0 to 100V	5.00mA	<1.0%	Reversible	24V	<20mA	<50mA
Q015-5	0 to 150V	3.33mA	<0.50%	Reversible	5V	<100mA	<250mA
Q015-5TS	0 to 150V	3.33mA	<0.50%	Reversible	5V	<100mA	<250mA
Q015-12CTRS	0 to 150V	3.33mA	<0.50%	Reversible	12V	<40mA	<100mA
Q015-12C	0 to 150V	3.33mA	<0.50%	Reversible	12V	<40mA	<100mA
Q02-5	0 to 200V	2.50mA	<0.25%	Reversible	5V	<100mA	<250mA
Q02-5CS	0 to 200V	2.50mA	<0.25%	Reversible	5V	<100mA	<250mA
Q02-5CTS	0 to 200V	2.50mA	<0.25%	Reversible	5V	<100mA	<250mA
Q02-5TR	0 to 200V	2.50mA	<0.25%	Reversible	5V	<100mA	<250mA
Q02-12	0 to 200V	2.50mA	<0.25%	Reversible	12V	<40mA	<100mA
Q02-12CTS	0 to 200V	2.50mA	<0.25%	Reversible	12V	<40mA	<100mA
Q02-24	0 to 200V	2.50mA	<0.25%	Reversible	24V	<20mA	<50mA
Q02CT-24R	0 to ±100V	2.50mA	<0.25%	Dual	24V	<20mA	<50mA
Q025-5	0 to 250V	2.00mA	<0.25%	Reversible	5V	<100mA	<250mA
Q025-5C	0 to 250V	2.00mA	<0.25%	Reversible	5V	<100mA	<250mA
Q025-5RS	0 to 250V	2.00mA	<0.25%	Reversible	5V	<100mA	<250mA
Q025-12	0 to 250V	2.00mA	<0.25%	Reversible	12V	<40mA	<100mA
Q03-5	0 to 300V	1.67mA	<0.25%	Reversible	5V	<100mA	<250mA
Q03-12	0 to 300V	1.67mA	<0.25%	Reversible	12V	<40mA	<100mA
Q04-5	0 to 400V	1.25mA	<0.10%	Reversible	5V	<100mA	<250mA
Q04-5RS	0 to 400V	1.25mA	<0.10%	Reversible	5V	<100mA	<250mA
Q04CT-5	0 to ±200V	1.25mA	<0.10%	Dual	5V	<100mA	<250mA
Q04-12	0 to 400V	1.25mA	<0.10%	Reversible	12V	<40mA	<100mA
Q04CT-12	0 to ±200V	1.25mA	<0.10%	Dual	12V	<40mA	<100mA
Q04-24	0 to 400V	1.25mA	<0.10%	Reversible	24V	<20mA	<50mA
Q04-24TR	0 to 400V	1.25mA	<0.10%	Reversible	24V	<20mA	<50mA
Q045-12	0 to 450V	1.11mA	<0.15%	Reversible	12V	<40mA	<100mA
Q05-5	0 to 500V	1.00mA	<0.15%	Reversible	5V	<100mA	<250mA

Models & Ratings

Model Number	Output				Input		
	Output Voltage[2]	Output Current[1]	Ripple	Polarity[5]	Input Voltage	Input Current, No Load	Input Current, Full Load
Q05-5C	0 to 500V	1.00mA	<0.15%	Reversible	5V	<100mA	<250mA
Q05-5CTRS	0 to 500V	1.00mA	<0.15%	Reversible	5V	<100mA	<250mA
Q05-5RS	0 to 500V	1.00mA	<0.15%	Reversible	5V	<100mA	<250mA
Q05-12	0 to 500V	1.00mA	<0.15%	Reversible	12V	<40mA	<100mA
Q05-12T	0 to 500V	1.00mA	<0.15%	Reversible	12V	<40mA	<100mA
Q05-15	0 to 500V	1.00mA	<0.15%	Reversible	15V	<32mA	<80mA
Q05-24	0 to 500V	1.00mA	<0.15%	Reversible	24V	<20mA	<50mA
Q05-24CRS	0 to 500V	1.00mA	<0.15%	Reversible	24V	<20mA	<50mA
Q05-24CTS	0 to 500V	1.00mA	<0.15%	Reversible	24V	<20mA	<50mA
Q06-5	0 to 600V	833µA	<0.10%	Reversible	5V	<100mA	<250mA
Q06-12	0 to 600V	833µA	<0.15%	Reversible	12V	<40mA	<100mA
Q06-15	0 to 600V	833µA	<0.15%	Reversible	15V	<32mA	<80mA
Q06-24	0 to 600V	833µA	<0.15%	Reversible	24V	<20mA	<50mA
Q07-5	0 to 700V	714µA	<0.25%	Reversible	5V	<100mA	<250mA
Q07-12	0 to 700V	714µA	<0.25%	Reversible	12V	<40mA	<100mA
Q07-15	0 to 700V	714µA	<0.25%	Reversible	15V	<32mA	<80mA
Q08-24	0 to 800V	625µA	<0.30%	Reversible	24V	<20mA	<50mA
Q09-12	0 to 900V	556µA	<0.25%	Reversible	12V	<40mA	<100mA
Q09-12C	0 to 900V	556µA	<0.25%	Reversible	12V	<40mA	<100mA
Q09-12T	0 to 900V	556µA	<0.25%	Reversible	12V	<40mA	<100mA
Q09CT-12	0 to ±450V	556µA	<0.25%	Dual	12V	<40mA	<100mA
Q09-24R	0 to 900V	556µA	<0.25%	Reversible	24V	<20mA	<50mA
Q10-5	0 to +1000V	500µA	<0.25%	Positive	5V	<100mA	<250mA
Q10-5RS	0 to +1000V	500µA	<0.25%	Positive	5V	<100mA	<250mA
Q10-5CTS	0 to +1000V	500µA	<0.25%	Positive	5V	<100mA	<250mA
Q10-5TS	0 to +1000V	500µA	<0.25%	Positive	5V	<100mA	<250mA
Q10N-5	0 to -1000V	500µA	<0.25%	Negative	5V	<100mA	<250mA
Q10N-5C	0 to -1000V	500µA	<0.25%	Negative	5V	<100mA	<250mA
Q10N-5CS	0 to -1000V	500µA	<0.25%	Negative	5V	<100mA	<250mA
Q10N-5S	0 to -1000V	500µA	<0.25%	Negative	5V	<100mA	<250mA
Q10-12	0 to +1000V	500µA	<0.25%	Positive	12V	<40mA	<100mA
Q10-12CTS	0 to +1000V	500µA	<0.25%	Positive	12V	<40mA	<100mA
Q10N-12	0 to -1000V	500µA	<0.25%	Negative	12V	<40mA	<100mA
Q10-24R	0 to +1000V	500µA	<0.25%	Positive	24V	<20mA	<50mA
Q12-5	0 to +1200V	417µA	<0.25%	Positive	5V	<100mA	<250mA
Q12-5R	0 to +1200V	417µA	<0.25%	Positive	5V	<100mA	<250mA
Q12-5RS	0 to +1200V	417µA	<0.25%	Positive	5V	<100mA	<250mA
Q12-5TS	0 to +1200V	417µA	<0.25%	Positive	5V	<100mA	<250mA
Q12N-5	0 to -1200V	417µA	<0.25%	Negative	5V	<100mA	<250mA
Q12N-5RS	0 to -1200V	417µA	<0.25%	Negative	5V	<100mA	<250mA
Q12N-5TS	0 to -1200V	417µA	<0.25%	Negative	5V	<100mA	<250mA
Q12-12	0 to +1200V	417µA	<0.25%	Positive	12V	<40mA	<100mA
Q12N-12	0 to -1200V	417µA	<0.25%	Negative	12V	<40mA	<100mA
Q12N-15	0 to -1200V	417µA	<0.25%	Negative	15V	<32mA	<80mA

Models & Ratings

Model Number	Output				Input		
	Output Voltage[2]	Output Current[1]	Ripple	Polarity[5]	Input Voltage	Input Current, No Load	Input Current, Full Load
Q12N-24C	0 to -1200V	417µA	<0.25%	Negative	24V	<20mA	<50mA
Q15-5	0 to +1500V	333µA	<0.25%	Positive	5V	<100mA	<250mA
Q15-5S	0 to +1500V	333µA	<0.25%	Positive	5V	<100mA	<250mA
Q15N-5	0 to -1500V	333µA	<0.25%	Negative	5V	<100mA	<250mA
Q15N-5S	0 to -1500V	333µA	<0.25%	Negative	5V	<100mA	<250mA
Q15N-5T	0 to -1500V	333µA	<0.25%	Negative	5V	<100mA	<250mA
Q15-12	0 to +1500V	333µA	<0.25%	Positive	12V	<40mA	<100mA
Q15-12C	0 to +1500V	333µA	<0.25%	Positive	12V	<40mA	<100mA
Q15-12S	0 to +1500V	333µA	<0.25%	Positive	12V	<40mA	<100mA
Q15-12T	0 to +1500V	333µA	<0.25%	Positive	12V	<40mA	<100mA
Q15-12TS	0 to +1500V	333µA	<0.25%	Positive	12 V	<40mA	<100mA
Q15N-12C	0 to -1500V	333µA	<0.25%	Negative	12V	<40mA	<100mA
Q15-24	0 to +1500V	333µA	<0.25%	Positive	24V	<20mA	<50mA
Q15N-24	0 to -1500V	333µA	<0.25%	Negative	24V	<20mA	<50mA
Q20-5	0 to +2000V	250µA	<0.25%	Positive	5V	<100mA	<250mA
Q20-5RS	0 to +2000V	250µA	<0.25%	Positive	5V	<100mA	<250mA
Q20-5TR	0 to +2000V	250µA	<0.25%	Positive	5V	<100mA	<250mA
Q20N-5	0 to -2000V	250µA	<0.25%	Negative	5V	<100mA	<250mA
Q20-12	0 to +2000V	250µA	<0.25%	Positive	12V	<40mA	<100mA
Q20N-12	0 to -2000V	250µA	<0.25%	Negative	12V	<40mA	<100mA
Q20-24	0 to +2000V	250µA	<0.25%	Positive	24V	<20mA	<50mA
Q25-5	0 to +2500V	200µA	<0.50%	Positive	5V	<250mA	<400mA
Q25-5T	0 to +2500V	200µA	<0.50%	Positive	5V	<250mA	<400mA
Q25N-5TR	0 to -2500V	200µA	<0.50%	Negative	5V	<250mA	<400mA
Q25-12TR	0 to +2500V	200µA	<0.50%	Positive	12V	<100mA	<250mA
Q25-24	0 to +2500V	200µA	<0.50%	Positive	24V	<35mA	<75mA
Q30-5	0 to +3000V	167µA	<0.50%	Positive	5V	<250mA	<400mA
Q30N-5	0 to -3000V	167µA	<0.50%	Negative	5V	<250mA	<400mA
Q30-12	0 to +3000V	167µA	<0.50%	Positive	12V	<100mA	<250mA
Q30N-12	0 to -3000V	167µA	<0.50%	Negative	12V	<100mA	<250mA
Q30-24R	0 to +3000V	167µA	<0.50%	Positive	24V	<35mA	<75mA
Q30N-24R	0 to -3000V	167µA	<0.50%	Negative	24V	<35mA	<75mA
Q40-5	0 to +4000V	125µA	<0.50%	Positive	5V	<250mA	<400mA
Q40N-5	0 to -4000V	125µA	<0.50%	Negative	5V	<250mA	<400mA
Q40N-5T	0 to -4000V	125µA	<0.50%	Negative	5V	<250mA	<400mA
Q40-12	0 to +4000V	125µA	<0.50%	Positive	12V	<100mA	<250mA
Q50-5	0 to +5000V	100µA	<0.50%	Positive	5V	<250mA	<400mA
Q50-5C	0 to +5000V	100µA	<0.50%	Positive	5V	<250mA	<400mA
Q50-5CTS	0 to +5000V	100µA	<0.50%	Positive	5V	<250mA	<400mA
Q50N-5	0 to -5000V	100µA	<0.50%	Negative	5V	<250mA	<400mA
Q50N-5T	0 to -5000V	100µA	<0.50%	Negative	5V	<250mA	<400mA
Q60-5	0 to +6000V	83.3µA	<1.0%	Positive	5V	<175mA	<250mA
Q60-5S	0 to +6000V	83.3µA	<1.0%	Positive	5V	<175mA	<250mA
Q60N-5	0 to -6000V	83.3µA	<1.0%	Negative	5V	<175mA	<250mA

Q Series

Models & Ratings

Model Number	Output				Input		
	Output Voltage[2]	Output Current[1]	Ripple	Polarity[5]	Input Voltage	Input Current, No Load	Input Current, Full Load
Q80-5	0 to +8000V	62.5µA	<1.0%	Positive	5V	<175mA	<250mA
Q101-5	0 to +10,000V	50.0µA	<1.0%	Positive	5V	<175mA	<250mA
Q101N-5	0 to -10,000V	50.0µA	<1.0%	Negative	5V	<175mA	<250mA
Q101N-5RS	0 to -10,000V	50.0µA	<1.0%	Negative	5V	<175mA	<250mA

Option Codes

Code	Meaning	Code	Meaning
CT-	Center Tap, Dual Output	-S	External Copper Shield
-C	Control Pin	-R	RoHS Designator for Legacy Model
-T	Extended Operating Temperature		

Copper Shield Placement

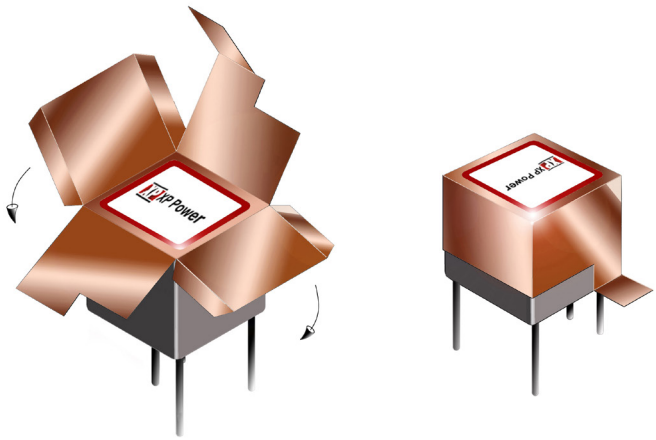

Block Diagram

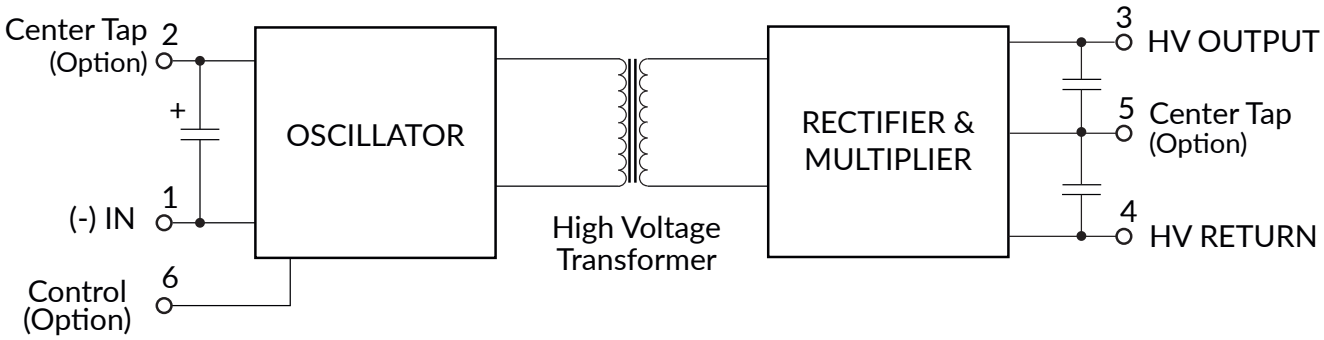

Mechanical Details

Q01-Q20

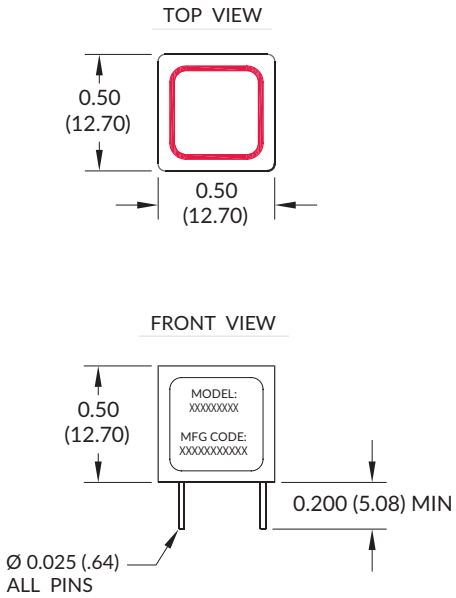

PCB Layout

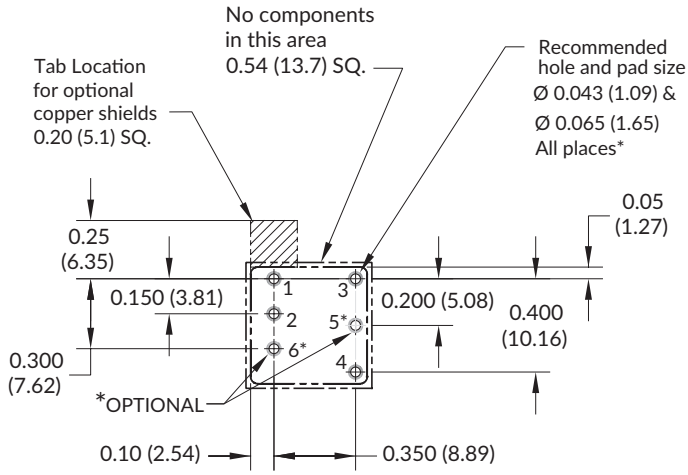

Pin	Q01-Q09	Q10-Q20	Q25-Q50
1	Input (-)	Input (-)	Input (-)
2	Input (+)	Input (+)	Input (+)
3	Output (+)	HV Output	HV Output
4	Output (-)	HV Return	HV Return
5*	Center Tap		
6*	Control Pin		

*Pins 5 & 6 are optional

Q25-Q50

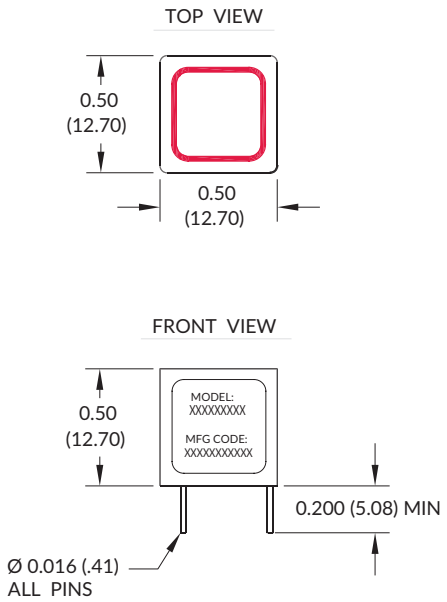

PCB Layout

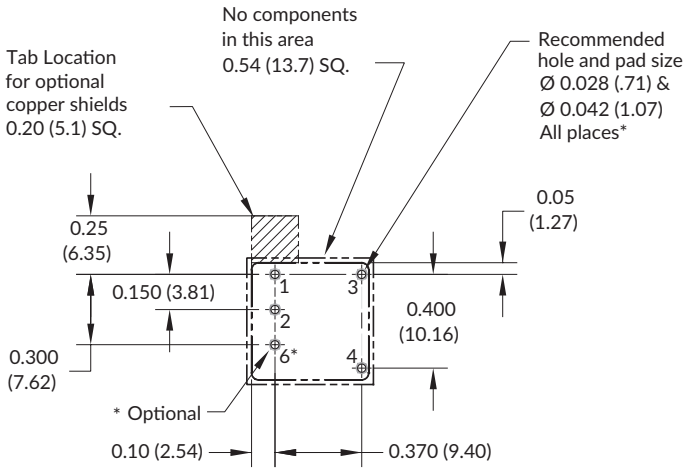

Notes:

1. All dimensions are in inches (mm)
2. Weight: Q01-Q50: 0.15oz (4.25g).
3. Tolerance: X.XX±0.02 (0.51)
4. Pin Tolerance: ±0.005 (0.127)

Mechanical Details

Q60-Q101

Wire	Color	Function
1	Red	Input (+)
2	Black	Input (-)
3	Brown	HV Output
4	Violet	HV Return

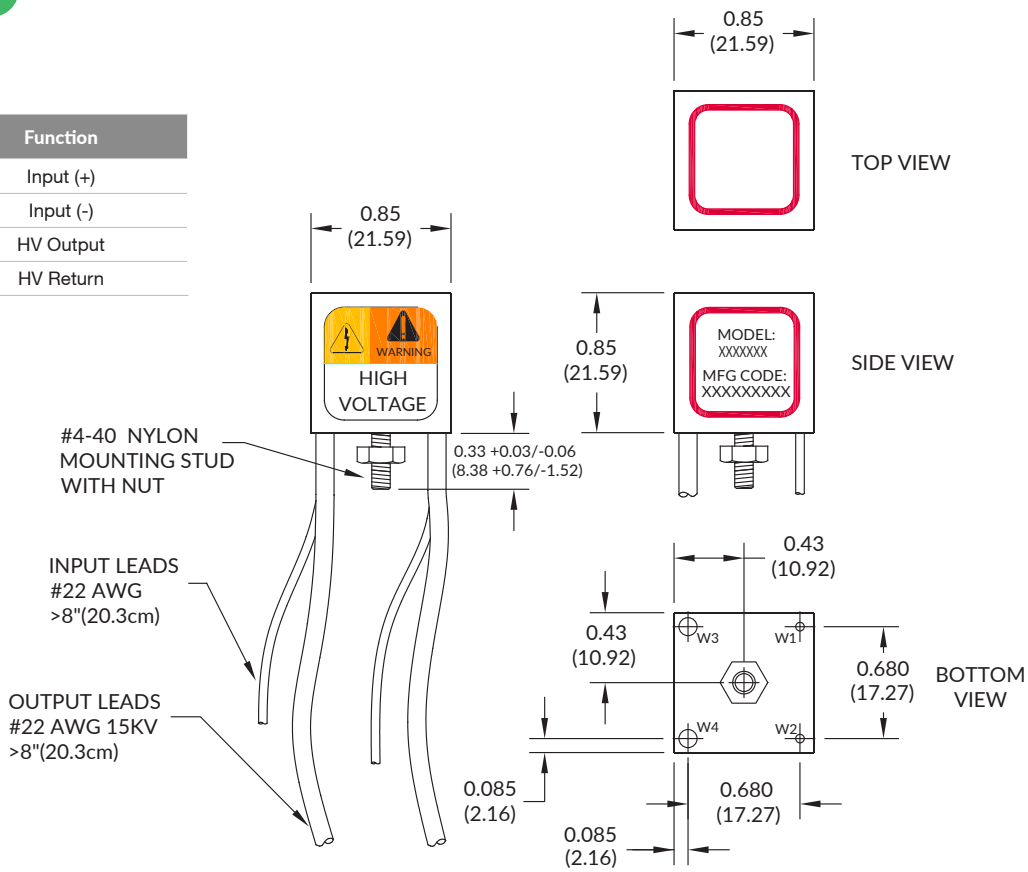

Notes:

1. All dimensions are in inches (mm)
2. Weight: Q01-Q50: 0.15oz (4.25g).
3. Tolerance: X.XX±0.02 (0.51)
4. Pin Tolerance: ±0.005 (0.127)

Application Notes

Typical HV Output vs. Control Voltage

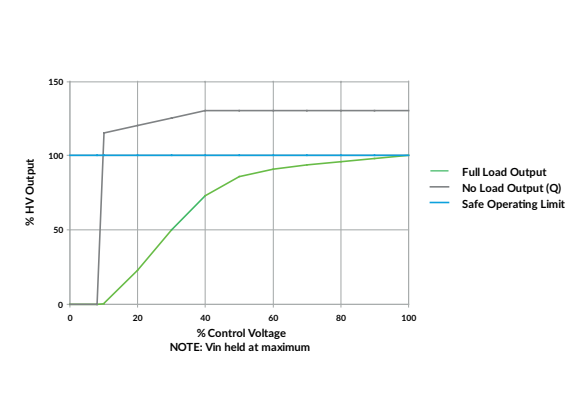

Typical Output vs. Input Voltage

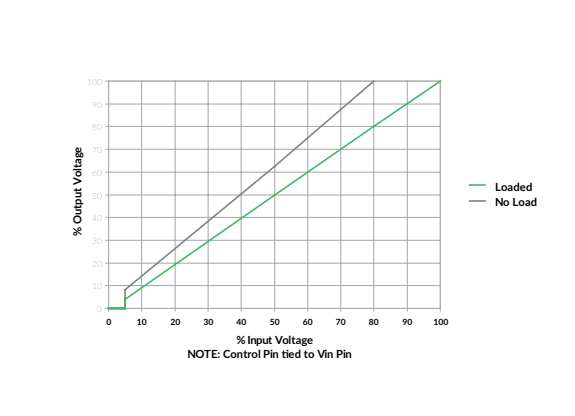

Connection Diagrams

Q01-Q09 - positive output for reversible models

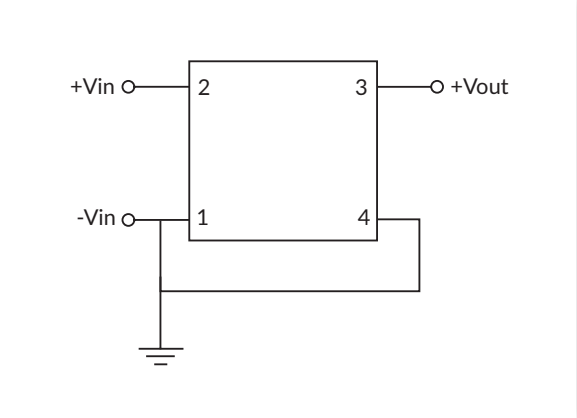

Q01-Q09 - negative output for reversible models

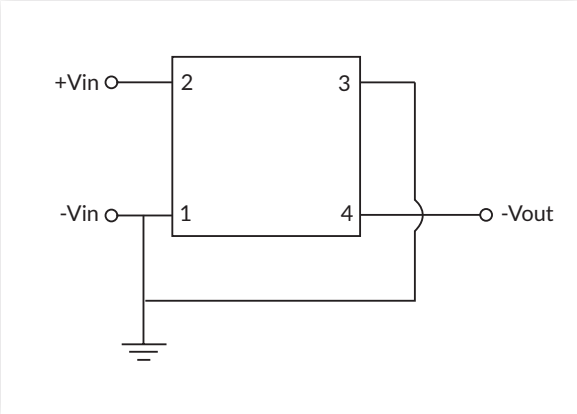

Q01CT-Q09CT - dual output

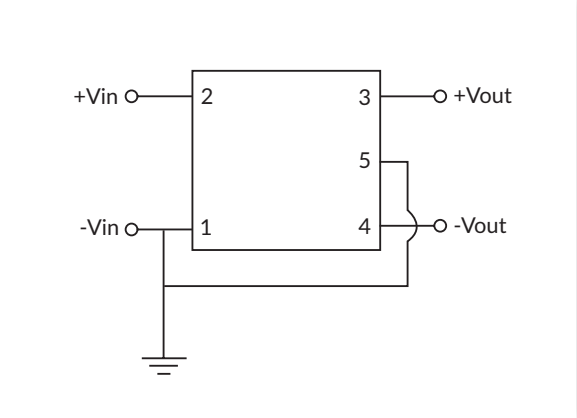
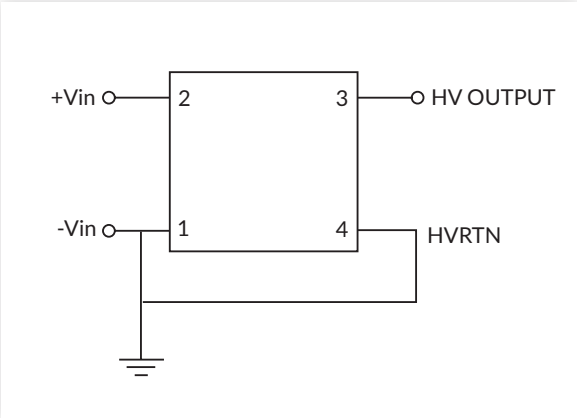
Q10-Q101 - output is positive or negative by model number