Q22 series

Ø22 mm panel mount LED indicators

DISTINCTIVE FEATURES

16.75 mm colored diffused epoxy lens or 16.75 mm super bright LEDs

Secret until lit polycarbonate decals or custom engraving

(2.8 x 0.8) solder lug/faston terminals, pins or (200 mm long) wire terminations

Available in RGB

ENVIRONMENTAL SPECIFICATIONS

- IP67 sealing option (EN60529)
- Operating & Storage Temperature Range:
  Rear plastic body: -30 °C to +65 °C (–22 °F to +149 °F)
  Rear epoxy body: -40 °C to +85 °C (–40 °F to +185 °F)

GENERAL SPECIFICATIONS

- Max Reverse Voltage: 5 V
- Viewing Angle: 30–100° (dependant on model)
- Life Expectancy: 100,000 hours
- Torque: 75 cNm (dependent on option)
- Maximum panel thickness 12 mm (Prominent), 10 mm (Flush)

MATERIALS

- Plated brass bezel finished in bright chrome, black or satin grey and moulded polycarbonate rear body. Plastic bezel in ABS.

MOUNTING

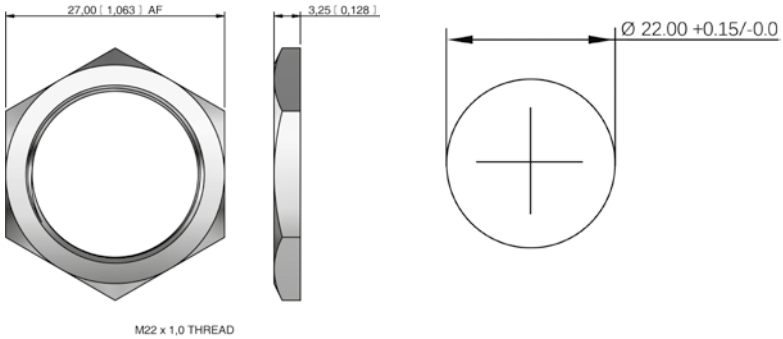

The company reserves the right to change specifications without notice.

All LED characteristics are dependent upon environmental conditions. Therefore published data should be considered nominal and subject to variations.

.

Q22 series

Ø22 mm panel mount LED indicators

ELECTRICAL SPECIFICATIONS

STANDARD LED INTENSITY

LED COMPONENT SPECIFICATIONS			
	Prominent and Recessed	Flush	Forward Voltage
HE Red	82 mcd	70 mcd	5.7 V
Green	95 mcd	66 mcd	6.0 V
Yellow	60 mcd	59 mcd	5.9 V
Blue	120 mcd	101 mcd	9.9 V
White	1,000 mcd	150 mcd	3.3 V
Bi-color (Typical) (Red/Green)	80/50 mcd	80/50 mcd	2.0 V/2.2 V
Tri-color (Typical) (Red/Green/Yellow)	80/50/50 mcd	80/50/50 mcd	2.0 V/2.2 V/2.1 V
Bi-color - The color is changed by reversing the polarity of the supply voltage. Tri-color - The indicator has red and green LEDs, when both connected yellow is produced.			

SUPER BRIGHT LED INTENSITY

LED COMPONENT SPECIFICATIONS			
	Prominent and Recessed	Flush	Forward Voltage
HE Red	465 mcd	800 mcd	5.7 V
Green	245 mcd	980 mcd	9.0 V
Yellow	365 mcd	1,250 mcd	6.0 V

RGB LED INTENSITY

ITEM	SYMBOL	CONDITION	TYP.
DC Forward Voltage	V_F(R)	IF=20 mA	2.1
	V_F(B/G)	IF=20 mA	3.1
Luminous Intensity	Iv (Red)		220 mdc
	Iv (Green)		500 mdc
	Iv (Blue)		100 mdc

Voltage	Operating Voltage	Operating Current
	(Min to Max)	(Typical All Types)
05 (No Resistor)	3.3 to 9.9 VDC	40 mA max*
12 VDC	10.8 to 13.2 VDC	40 mA
24 VDC	21.6 to 26.4 VDC	40 mA
28 VDC	25.2 to 30.8 VDC	40 mA
110 VAC	99 to 121 VAC	5 mA
220 VAC	207 to 235 VAC	3 mA

* Customer to supply resistor for desired operating current.

ADDITIONNAL INFORMATION ON LED COMPONENTS

- Bi-color leds, by connecting the gold faston (+) one color is produced, by reversing the supply voltage another color is produced – bi-colors are available up to 28 VDC
- The tri-color led has red and green leds when both are connected yellow is produced
- The operating voltage must not be exceeded by more that 10% as this will result in reduced life expectancy
- Luminous intensity is measured at 20 mA on a discrete led unless otherwise stated.
- Luminous intensities and color shades of white LEDs may vary within a batch.
- Luminous intensity will be reduced with lower operating current.

CONNECTIONS

REAR EPOXY WIRES FOR RGB OPTION

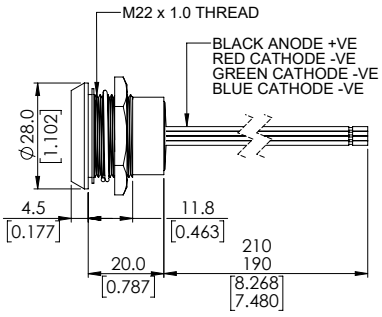

Q22 series

Ø22 mm panel mount LED indicators

BUILD YOUR PART NUMBER

Q

SERIES

MOUNTING HOLE

22	Ø22mm

BEZEL STYLE

Metal	
P	Prominent
R	Recessed
F	Flush
Y	Chamfer*
Plastic	
PP	Prominent
FP	Flush

TERMINALS

1	Solder Lug/ Fastons (2.8 x 0.8)
4	Rear epoxy Pins
5	Rear epoxy Wires
6	Short body Pins
7	Short body Wires

* bezel finish : only with option "S" and "Anodized Flush"

BEZEL FINISH

Metal		**Anodized Flush**	
C	Bright Chrome	AR	Red
B	Black	AG	Green
G	Satin Grey	AY	Yellow
S	Stainless Steel	AB	Blue
Plastic		AN	Black
BP	Black		

TYPE OF ILLUMINATION

XX	Fixed Light
KK	Flashing Light (only 12 VDC)
YY	Bi-color
ZZ	Tri-color

LED COLOR

R	Red	SY	Super Bright Yellow
G	Green	RG	Red/Green
Y	Yellow	RY	Red/Yellow
B	Blue	GY	Green/Yellow
W	White	RYG	Red/Yellow/ Green
SR	Super Bright Red	RGB	Red/Green/ Blue*
SG	Super Bright Green		

* Terminals option 5 and common anode only

VOLTAGE

05	no resistor**
12	12 VDC
12A	12 VAC/DC
24	24 VDC
24A	24 VAC/DC
28	28 VDC
28A	28 VAC/DC
110	110 VAC
220	220 VAC

** please refer to the forward voltage in electrical specifications

SEALING

(Blank)	Unsealed
E	IP67

(Blank)	Common cathode
-CA	Common anode

OPTIONS

DL	Daisy Chain
LT	Lamp Test

ABOUT THIS SERIES

Notice: please note that not all combinations of above numbers are available.

- Gold faston terminal denotes anode (+), silver terminal denotes cathode (-)
- Standard wire length is 200 mm, 22 AWG UL1007, red wire denotes anode (+), black wire denotes cathode (-) for other wire lengths consult APEM
- For leds with alternative voltages please consult Apem
- 110 VAC and 220 VAC, short body terminal options, 5, 6 and 7 please consult the factory
- Take care when soldering to the faston terminals (recommended solder temperature 300 °C - 3 sec)
- Pin and Wire options are epoxy sealed at the rear of the bezels, termination options 4 and 5
- Standard tri-color faston terminals are two anodes (+) and one cathode (-)
- Tri-color wires are one red (+) and one green (+) anode and one black (-) cathode
- Tri-color pins are center (–) cathode, shortest (+) anode pin green, longest (+) anode pin red
- Daisy chaining option - has negative (Cathode) terminals linked (3 x Fastons), solder lugs only
- Lamp test facility option 4 x solder lug/Faston only
- We recommend using superbright leds for use at 110 VAC and 220 VAC

Q22 series

Ø22 mm panel mount LED indicators

PROMINENT BEZEL

SOLDER LUG/FASTON

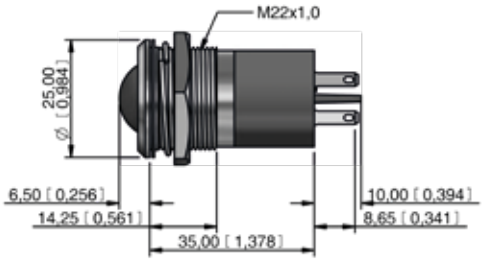

REAR EPOXY WIRES

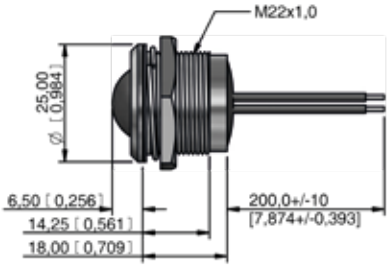

REAR EPOXY PINS

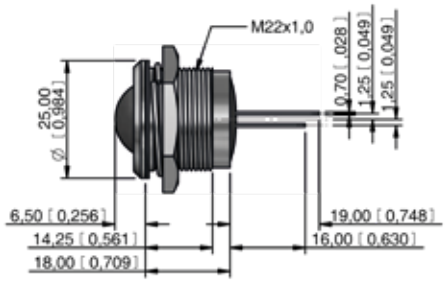

SHORT BODY WIRES

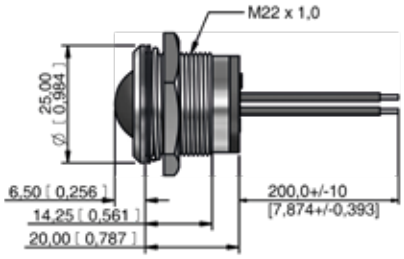

SHORT BODY PINS

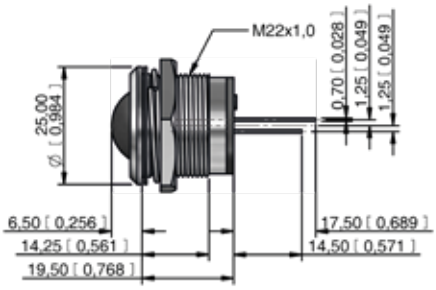

Q22 series

Ø22 mm panel mount LED indicators

FLUSH BEZEL

SOLDER LUG/FASTON

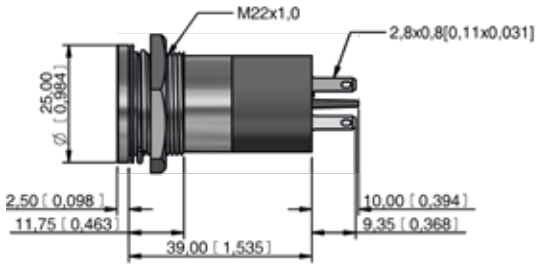

REAR EPOXY WIRES

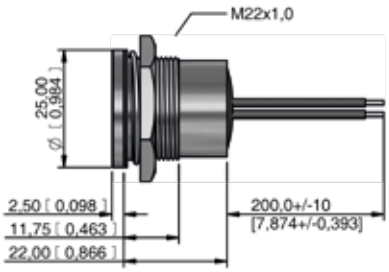

REAR EPOXY PINS

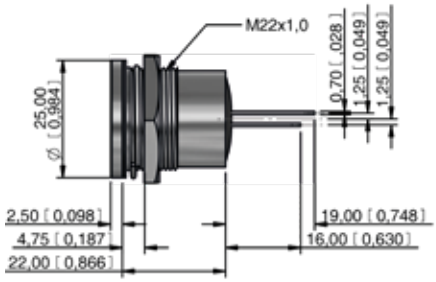

SHORT BODY WIRES

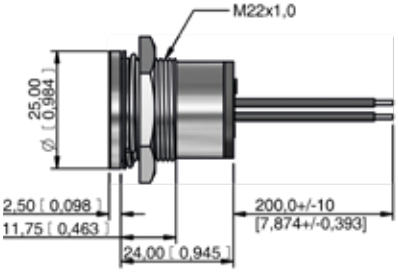

SHORT BODY PINS

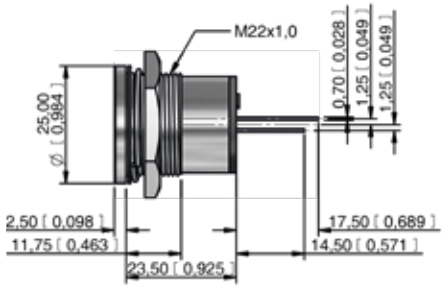

Q22 series

Ø22 mm panel mount LED indicators

RECESSED BEZEL

SOLDER LUG/FASTON

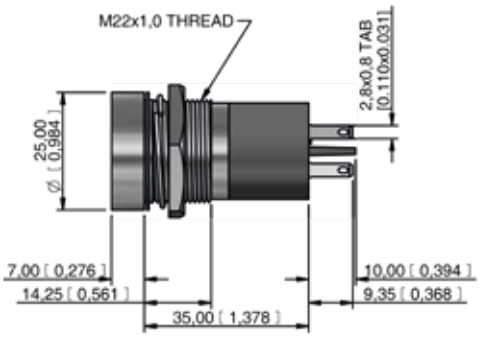

REAR EPOXY WIRES

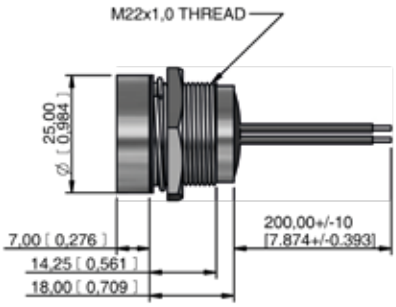

PINS

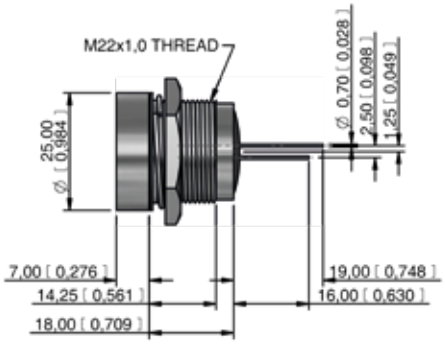

SHORT BODY WIRES

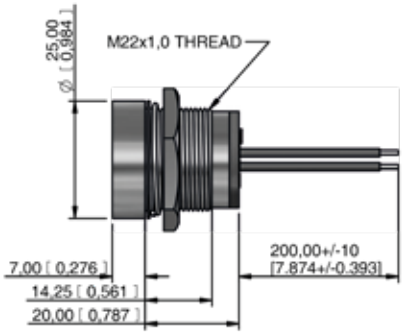

REAR EPOXY PINS

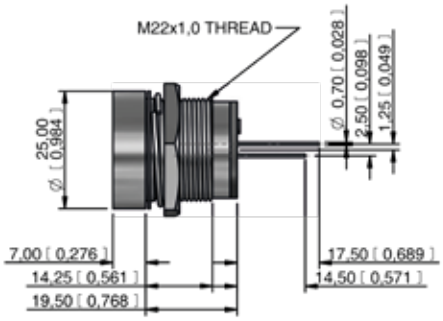

Q22 series

Ø22 mm panel mount LED indicators

CHAMFER BEZEL
(316L STAINLESS STEEL AND ANODIZED ALUMINIUM ONLY)

SOLDER LUG/FASTON

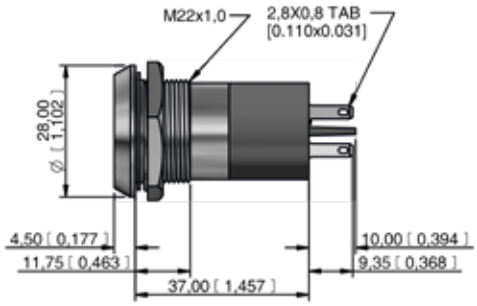

REAR EPOXY WIRES

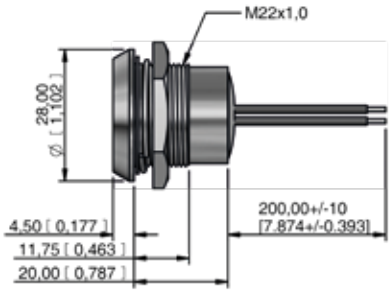

PINS

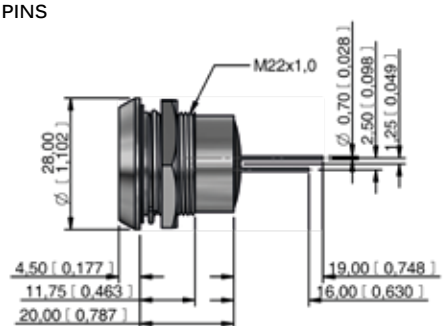

SHORT BODY WIRES

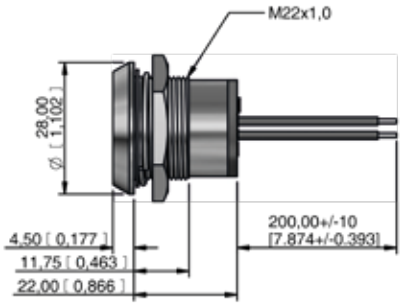

REAR EPOXY PINS

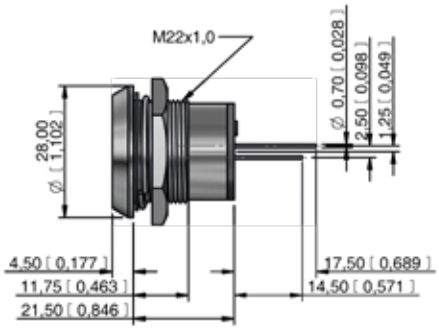

Q22 series

Ø22 mm panel mount LED indicators

CUSTOM ENGRAVING

Some common codes are listed above, for your custom requirements please contact APEM.
Unless specified standard engraving with white infill will be supplied.
Suffix the part number with legend code :

High beam -0AJ	Low beam -097	Rear fog -027	Front fog -026	Windscreen wiper -021	Windscreen washer -022	Ventilator fan -023
Turn Signal -0AH	Side lights -098	Horn -041	Hazard warning -013	Heating -018	Brake test -0BU	Arrow -0K6
Battery -0AG	Oil can -0GP	Windscreen heating -020	ABS -086	Engine coil -0EL	Seat belt -0SB	USB connection -0BU
Steam -0ST	ECU -0EU	Side step -0AD	Air con -012	Engine -040	Boot/Trunk Release -0BR	

Q22 series

Ø22 mm panel mount LED indicators

SECRET UNTIL LIT POLYCARBONATE INSERTS

Some common codes are listed above, for your custom requirements please contact APEM. Please note Secret until lit inserts only available with flush metal bezel (Option F)
Suffix the part number with legend code :

Turn signal
-3AH

Hazard
-313

Oil can
-3GP

Battery
-3AG

Rear fog
-327

Low beam
-397

Brake test
-3BU

Arrow
-3K6

High beam
-3AJ

Park brake
-3PB

Side lights
-398

Seat belt
-3SB

Type pressure
-3TP

Check engine
-3CE

Engine temperature
-3EC

Fuel
-3FP

Brake failure
-3BF

Off

On

CABLE LENGTH AND CONNECTOR

For custom cable length and connectors contact APEM.