PQU650 Series

650W 4" x 6" AC-DC "U" Channel Power Supply Converter

FEATURES[2]

- Compact high-density design and thermal performance operation to:
  - 450W[3] convection at +50°C; no derating with input line voltage
  - 650W with forced airflow at +50°C; no derating with input line voltage
  - 800W "power boost" (at output start-up) for 30s.
- Voltage (+15%)[2] adjustment of Main V1 Output
- +5VAux/Standby and 12V Fan outputs
- 4" x 6" industry standard footprint; "U" channel form factor with industry "standard" mounting footprints.
  - 40mm maximum overall "U" Channel height
  - 42.7mm max overall height with cover
  - Choice of screwed or pluggable connector variants.
- High efficiency of 95% typical at 50% load
- Very low no load standby power consumption
- True zero load operation of the Main (V1) output; no minimum load requirements
- Remote sense, main output (option)
- Universal AC input; active PFC; EN61000-3-2 Class A
- MTBF 797Khrs; Telcordia SR332 Issue 3; M1 Case 3; +40ºC)
- RoHS3 compliant
- Parallel/redundant capable; droop current share as standard feature
- IIEC62368-1 Certified
- Typical Applications:
  - Industrial
  - Telecommunications and Datacoms
  - Test equipment, ATE
  - Visual signage
  - Broadcast
  - PoE

[1] When deployed in End User Systems
[2] 54V output adjustment range is +5% max to maintain max voltage to <60V.
[3] PQU650-12P derated to 400W convection..

DESCRIPTION

The PQU650 Series products are rated at 650W employing a "U" channel construction to operate with natural convection or forced airflow.
The PQU650 series is a 6"x 4" format capable of providing a continuous 650W[1] output, with a constant current overload characteristic, and 800W "power boost" at output start[4] to deliver transient loads.

The compact form factor offers an impressive 450W of natural convection cooled power at +50°C.
Provision of an adjustable Main output, plus Auxiliary/Standby and fan outputs, will enable this technically superior solution to be deployed across multiple market sectors, complemented by safety certification applicable to Audio/Video/Communication and ITE standards.

Available options include screw terminals or plug header connectors, plus optional safety cover.

ORDERING GUIDE (MODEL NUMBER)

Model (Order) Number	Main output (V1)		Aux Output (V2)		Fan Output V3[5]	
	Voltage Vdc	Current Adc; @ 50°C; 650W[1]	Vdc	Current Adc @ 50°C	Vdc	Current Adc @ 50°C
PQU650-12	12	54.2	5	0.5	12	0.6
PQU650-24	24	27.1				
PQU650-28	28	23.2				
PQU650-48[2]	48	13.6				
PQU650-54[2]	54	12.1				
PQU650-12P[3]	12	54.2				
PQU650-24P	24	27.1				
PQU650-28P	28	23.2				
PQU650-48P[2]	48	13.6				
PQU650-54P[2]	54	12.1				
PQU650-54R[2]	54	12.1				
PQU-COVER[3]	Optional cover kit; End User assembly required.					
PQU650-F-COVER[6]	Optional cover kit with integral top mounted fan; End User assembly required.					

[1] Forced convection airflow required..
[2] PoE Isolation Compliant.
[3] Derating for convection cooling required.
[4] Any condition resulting in the Main V1 output restarting; i.e. recycling of PS_ON or recovery from OCP/OTP protection.
[5] Only available for forced air cooled deployments (not available for convection cooled deployments).
[6] Consult sales channel for availability

MAIN OUTPUT CHARACTERISTICS (ALL MODELS EXCEPT UNLESS NOTED)

Parameter	Conditions	Typ.	Max.	Units
Transient Response[1]	50% load step, 1A/µsec slew rate and min 10% load		± 5	%
Settling Time to 1% of Nominal			500	µsec
Turn On Delay	After application of input power		3	sec
Output Voltage Rise		200		msec
Remote Sense (Option)[2]	Compensates for up to 120mV of total lead drop (output and return connections) with remote sense connected. Protected against short circuit and reverse connection.		1	%

[1] Min. 1 second time between consecutive transients; requires 10% minimum load.
[2] Remote sense fs not offered as a standard feature due to droop current share characteristic offered on the standard models; consult the sales channel for availability of remote sense option.

ENVIRONMENTAL CHARACTERISTICS

Parameter	Conditions	Min.	Typ.	Max.	Units
Storage Temperature Range		-40		85	°C
Operating Temperature Range[4]	See power derating curves	-30		70	
Operating Humidity	Non-condensing	10		95	%
Operating Altitude		-200		5000[1]	m
MTBF	Telcordia SR-332 Issue 3; M1C3 @ 25°C Telcordia SR-332 Issue 3; M1C3 @ 40°C		1810K 797K		Hours
Shock	30G, non-operating	Complies			
Operational Vibration	Sine Sweep; 5-150Hz, 2G Random Vibration, 5-500Hz, 1.11G	Complies			
Safety – ITE, Audio/Video/Information and Communications Technology Equipment Standards	IEC 60950-1:2005, IEC 60950-1:2005/AMD1:2009, IEC 60950-1:2005/AMD2:2013 [CSA] CAN/CSA-C22.2 No. 60950-1-07, Amendment 1:2011, Amendment 2:2014 (MOD) [CSA] ANSI/UL 60950-1-2014 [CSA] EN 60950-1:2006/A2:2013 [TÜV SÜD] EN 62368-1: 2020/A11:2020 [TÜV SÜD] GB17625.1-2012; GB4943.1-2011; GB/T9254-2008 (Class A) [CCC] IEC 62368-1:2014 [CSA] CAN/CSA-C22.2 No. 62368-1:14; UL 62368-1 2nd Ed. [CSA] CE Marking per LVD UKCA Marking per LVD				
Fuses	Dual Fuses; Line and Neutral; 12.5A Fast Acting; 250V				
Outside Dimensions	4.0" x 6.0" x 1.69" (101.6mm x 152.4mm x 42.8mm) nominal				
Weight (typ.)	0.692/1.526				kg/lbs.

[1] Meets 5000 M max. altitude for Medical certification requirements.
[2] Starts at -30°C at 100Vac minimum input; however full specification guaranteed at -20°C.

PROTECTION CHARACTERISTICS

Parameter	Conditions	Min.	Typ.	Max.	Units
Over Voltage Protection	V1 (main output) latching	115		140	%
	V1 (48V & 54V models) latching			60	Vdc
	V2 (aux output) latching	5.5		7.5	
Over Current Protection	V3, (Fuse Protected)			1.5A	

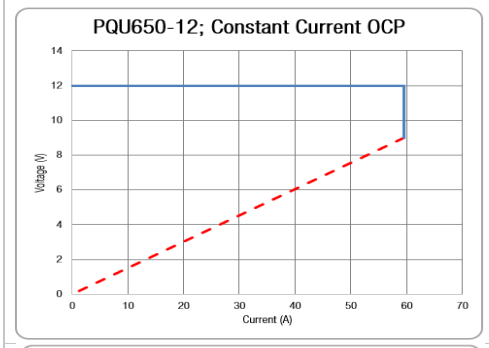

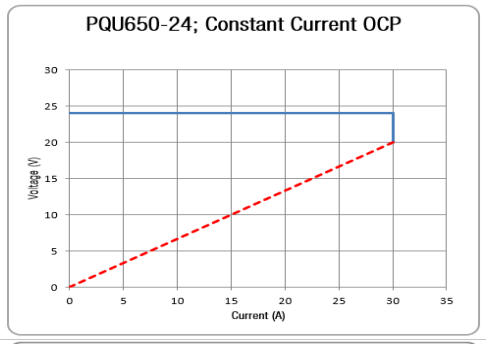

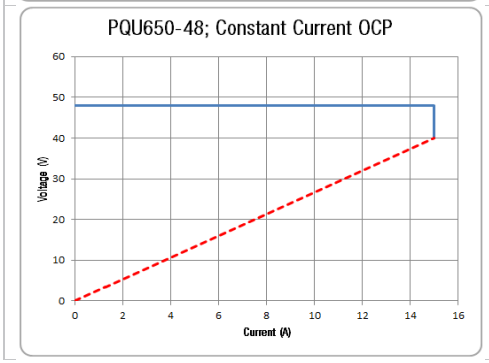

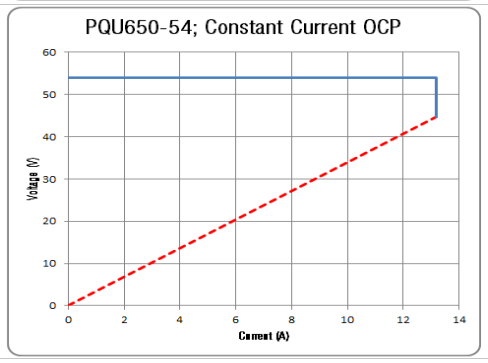

The idealized Constant Current characteristic is shown in the curves opposite. This feature will enable the PQU650 to successfully start in to application loads exhibiting large inrush current i.e. large capacitive loads, incandescent lamps, motors and solenoids.
The curves are generated for the PQU650 variants by subjecting the output to an incremental (constant resistance) load, equivalent to 1Adc increments (above full load).
The resultant curve shows the current limited to an initial constant "brick wall" (shown by the blue portion of curve).
If the load current is further incremented, the output will enter "hiccup" mode (recycling on/off) shown by the red dashed curve, commencing when the output voltage falls to ~75% of the nominal set point.
If the overload current is maintained above maximum load for an extended period in the "hiccup" region, operation will continue indefinitely while the overload persists. In the event that the overload is maintained just below that where "hiccup" operation is initiated, then, dependent on the prevailing operating conditions, the power module may enter thermal protection.
Each time the output recovers from hiccup the output power will be capable of 800W peak to provide additional power to ensure that the transient load is delivered.

PROTECTION CHARACTERISTICS CONTINUED

Parameter	Conditions	Min.	Typ.	Max.	Units
Over Current Protection	V2, auto-recovery	110		150	%
	V3; non-resettable fuse[1]			1.5	Adc
Over Voltage Protection[2]	Latching	110		140	%Vdc
Over Temperature Protection	Auto-recovery				°C
Primary Heatsink Temperature				130	
Secondary Temperature				130	
Remote Sense Short Circuit Protection			Complies		--
Remote Sense Reverse Connection Protection			Complies		--

[1]OCP of the 12V Fan (V3) output is provided by an SMD fuse (accessible from top) rated at 1.5A; therefore if ruptured the 12V Fan output will not be available and the fuse shall require to be replaced.
[2]Refers to percentage of nominal voltage

ISOLATION CHARACTERISTICS

Parameter	Conditions	Min.	Typ.	Max.	Units
Isolation	Primary to Chassis	1500			Vac
	Primary to Secondary	4000			
	Secondary to Chassis[1]	1500			
	Output to Output[1]	1500			
Earth Leakage Current (under normal conditions)	264Vac, 60Hz, 25°C			400	µAac

[1] Meets PoE isolation limits

CURRENT SHARING

Model Number	Description
All PQU650[1] Refer to ACAN-107 for additional details	Main output current sharing is achieved using the "droop" method. Nominal output voltage is achieved at 50% load; the output voltage increases/decreases (approximately ±3% of nominal voltage) with decreasing/increasing (respectively) load current. This regulation window does not include the additional tolerance due to line, temperature, long term stability etc. Startup of parallel power supplies is not internally synchronized. No more than 800W combined power is allowed at start-up. To account for±10% full load current sharing accuracy, and the reduction in full load output voltage due to droop, available output power must be derated by 15% when units are operated in parallel. Current sharing can be achieved with or without remote sense[2] connected to the common load. External ORing protection is recommended (see Application notes, ACAN-105 for additional details); Aux (V2) outputs can be tied together for redundancy but total combined output power must not exceed 2.5W; external ORing devices are recommended to preserve redundancy. It is not recommended that the 12V Fan (V3) outputs are connected in parallel since these outputs are only semi regulated and intended to power fans.

[1] Except PQU650-xxR variants that are not provided with this feature.
[2] Remote Sense is no provided as standard.

EMISSIONS AND IMMUNITY

Characteristic	Standard	Compliance
Input Current Harmonics	IEC/EN 61000-3-2	Class A
Voltage Fluctuation and Flicker	IEC/EN 61000-3-3	Complies
Conducted Emissions	CISPR 32/EN 55032	Class B
	FCC Part 15	Class B
Radiated Emissions	CISPR 32/EN 55032	Class B
	FCC 15.109 - 3 meter	Class B
ESD Immunity	IEC/EN 61000-4-2	Level 4, Criterion 2
Radiated Field Immunity	IEC/EN 61000-4-3	Level 3, Criterion A
Electrical Fast Transient Immunity	IEC/EN 61000-4-4	Level 4, Criterion A
Surge Immunity	IEC/EN 61000-4-5	Level 3, Criterion A (Com. Mode: 2kV 12 OHM, Diff. Mode: 1kV, 2ohm)
Radiated Field Conducted Immunity	IEC/EN 61000-4-6	Level 3, 10V/m, Criterion A
Magnetic Field Immunity	IEC/EN 61000-4-8	Level 3, Criterion A
Voltage dips, interruptions	IEC/EN 61000-4-11	Level 3, Criterion B

EMI CONSIDERATIONS

For optimum EMI performance, the power supply should be mounted to a metal plate grounded to all 4 mounting holes of the power supply. To comply with safety standards, this plate must be properly grounded to protective earth (see mechanical dimension notes). Pre-compliance testing has shown the stand-alone power supply to comply with EN55032 class B radiated emissions with a metal enclosure with grounded base plate. See PQU-COVER for details - testing was based on adding a toroid (4 turns of both main output wires wound as common mode choke on FAIR-RITE#5961002701). Radiated emission results vary with system enclosure and cable routing paths.
A minimum 10% load current is required, on the main output.

STATUS AND CONTROL SIGNALS

Parameter	Models	Conditions
PS_ON Connector J3 Pin 4	All Models (Except as noted)	This pin can be left unterminated (or alternatively pulled high to +5V_AUX; Connector J3 Pin 1) to (enable) turn on the main output. The +5V_AUX output is independent of the PS_ON signal, and comes up automatically when the input AC or input DC voltage is applied (within their respective specified operating ranges). If it is desired to turn off the Main Output (during normal operation) then this pin can be pulled "low" (sink current ≥2mA) to +5V_AUX_RTN.
PWOK Connector J3 Pin 2	All Models	The PWOK is a combined digital signal that signifies the status of the Main V1 output. It changes state due to loss of the incoming AC source and any condition that causes the Main V1 DC output shutdown (UVP, OCP, OTP protection). The output is via an open drain CMOS buffer (that has a 10K pull up resistor to an internal +5Vdc rail) that transitions high 15-25ms after the main output is within regulation; it transitions low at least 1msec before loss of regulation.

PART NUMBER STRUCTURE

PQU | 650 - XX | yyy

- yyy — Options
  - P = Plugs/Receptacles for all input, output and signal
  - R = Non droop "Regulated" variants
- XX — Main Output Voltage (12, 24, 28, 48, 54)
- 650 — Output Power (Watts)
- PQU — PQU = Power, Quality, "U" Channel

Examples: PQU650-24 = Base 24V Model; no options
PQU650-24P = Plug/Receptacles for all input, output and signal connections

PERFORMANCE TYPICAL DATA EXAMPLES (BASED ON 24V VARIANT)

Efficiency 24V Model

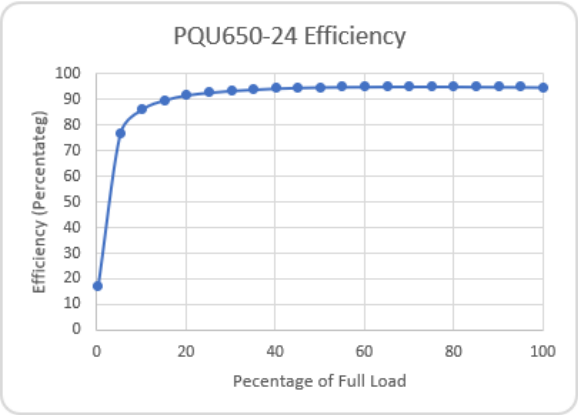

Typical Ripple & Noise (24V Model)

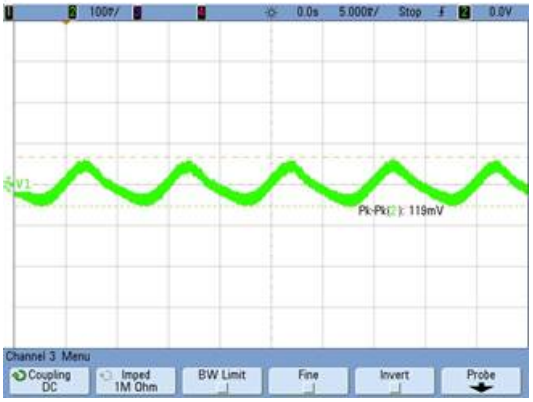

Transient Performance, 24V Model Half to Full Load

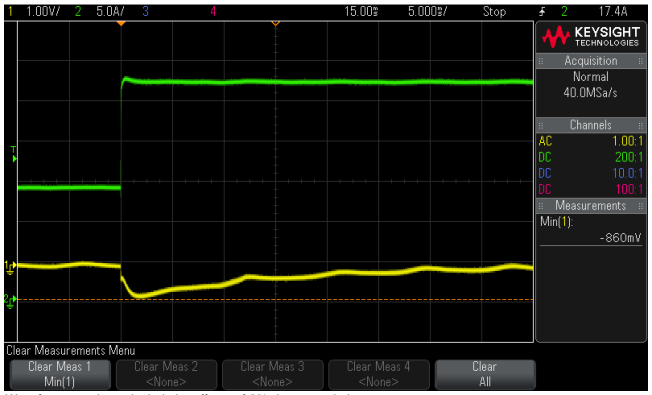

Transient Performance, 24V Model Full to Half Load

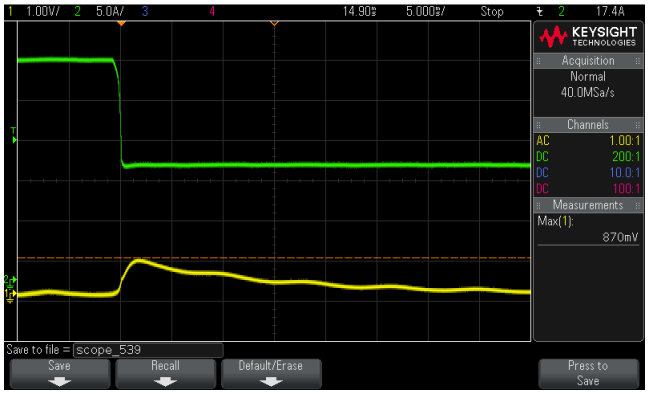

NB: Waveforms as shown includethe effects of 3% droop regulation.

Inrush Current; 264Vac Input, Cold Start, 10.5Apk

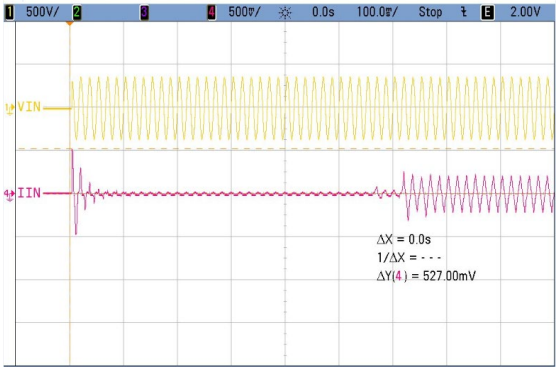

Hold Up Time; 90Vac; 650W

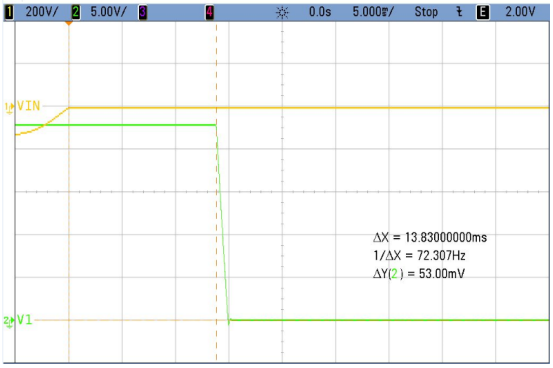

EMI; Conducted CISPR 22; Peak vs. Average Limit; L1; 100Vac 24Vdc @ 25Adc

EMI; Conducted CISPR 22; Peak vs. Average Limit; L2/Neutral; 100Vac 24Vdc @ 25Adc

PERFORMANCE TYPICAL DATA EXAMPLES

EMI; Conducted CISPR 22; Peak vs. Average Limit; L1; 208Vac 24Vdc @ 25Adc

EMI; Conducted CISPR 22; Peak vs. Average Limit; L2/Neutral; 208Vac 24Vdc @ 25Adc

THERMAL CONSIDERATIONS

System thermal management is critical to the performance and reliability of the PQU650 series power supplies. Performance derating curvesare provided which can be used as a guideline for what can be achieved (at various operating conditions) in a system configuration with controlled airflow.

The product is designed to provide 450W using natural convection cooling when mounted with an un-obstructed convection current airflow flow at up to +50°C local ambient temperature.
At elevated temperatures the power supply data is recorded while it is surrounded by a large vented enclosure, to minimize forced cross flows inherent in the elevated temperature test.
The product is capable of operation when mounted in diverse orientations; operational/derating cureves are provided to show the effect of such mounting.
See ACAN-106 for additonal details.

Capacitor Case Temperature and Mounting Orientation:

The power supply can operate in any orientation; however, the power supply contains overtemperature protection that will shut off the output as the temperature of critical componenets exceed their safe and reliable thermal limits. Additonally, life expectantcy of the power supply is inversely proportional to the case temperature of electrolytic capacitors. The designer of the system in which this power supply is deployed should consider this relationship to ensure optium product life. The following charts are initial life predications, based on 80% of full load capability, and illustrate this relationship.

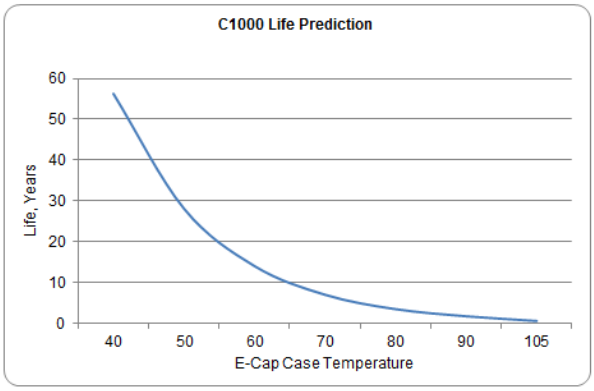

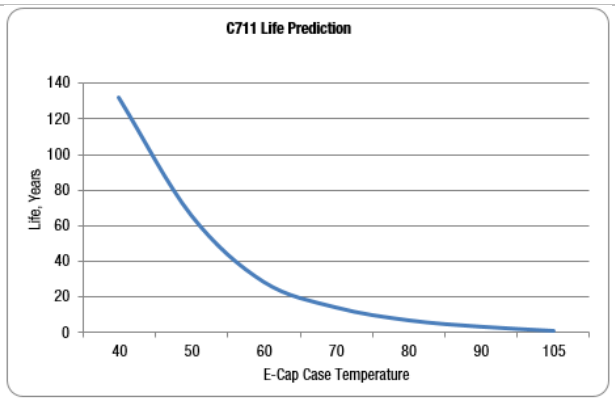

The PQU650 Series will also benefit from the provision of forced convection cooling airflow (generated by an external host system fan). A dedicated 12V Fan (V3) output is provided that can be used to power an external (system) fan or when used in conjunction with the PQU650-F-COVER.
This shall enable operation to the full capability of 650W at +50°C local ambient (forced convection cooling air) temperature.
Please refer to ACAN-106 for additonal details

NB: The above curves are based on generic predicted life.

DERATNG CURVES

Thermal

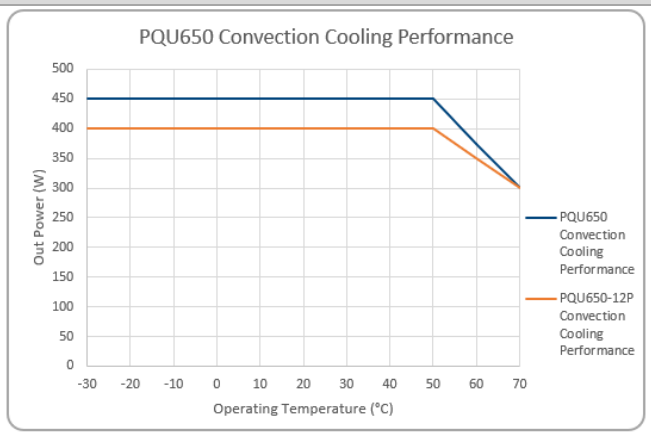

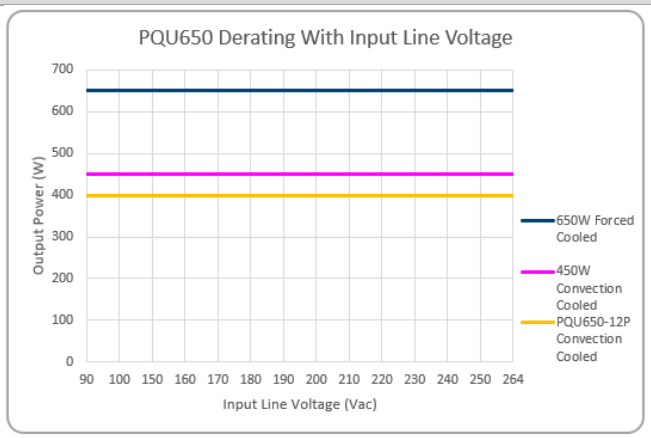

- The PQU650 will reliably provide 450W[1] cooled by natural convection with no derating for AC line at a local ambient temperature of +50°C; except for PQU650-12P that is derated to 400W at +50°C.
- It is also capable of providing 300W at operation up to +70°C.
- The PQU650 will provide 650W of power with a minimum recommended airflow of 300LFM/1.5m/s (for the opening area of the "U" channel i.e. 4.0" x 1.55 or 101.6mm x 40mm this equates to circa 13CFM/ 6.14 litre/s).

No derating with input line voltage for convection or forced cooling airflows for all variants in the series, except for PQU650-12P that derates to 400W when convection cooled.

WIRING DIAGRAM FOR OUTPUT CONNECTIONS

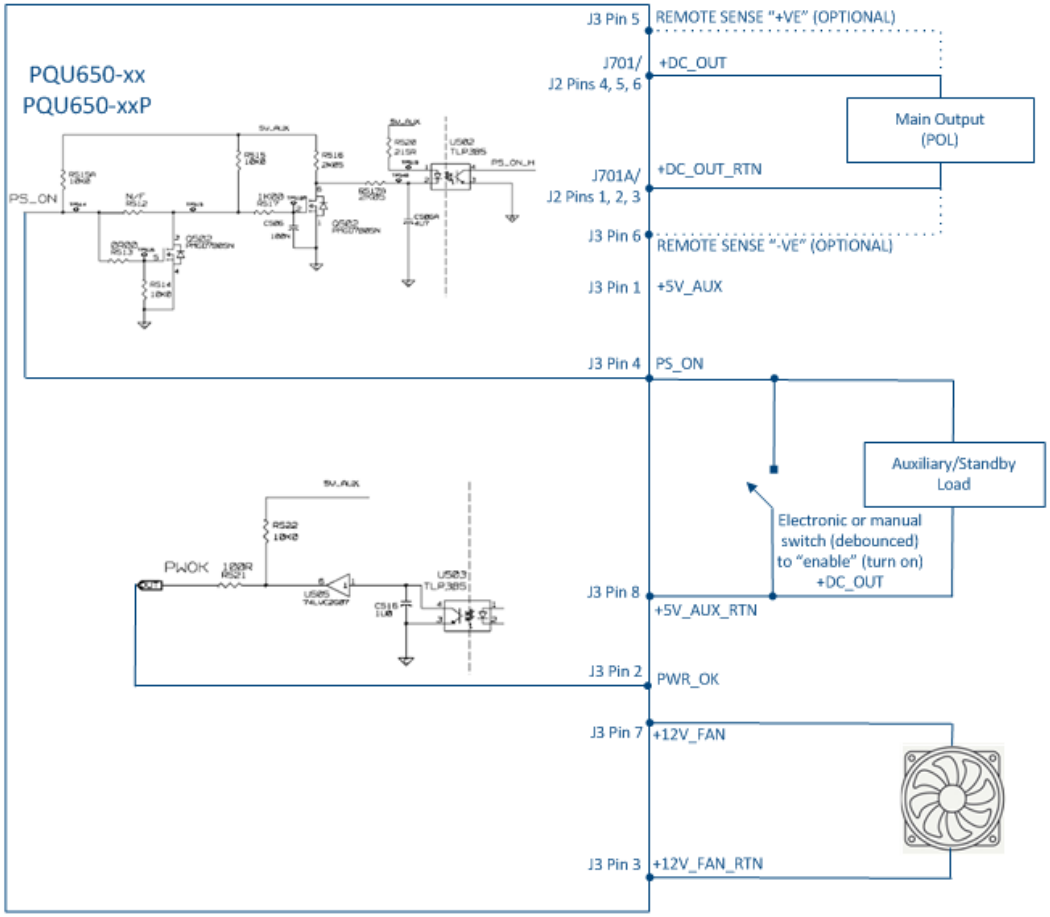

Note: For parallel (current share) operation it is required to connect the sharing power supplies in parallel (+DC out connected together and DC out Return connected together).
Since each output has an identical "droop" share characteristic then each output will intrinsically share the total load current. See ACAN-107 for more details.
It is recommended that for redundant (critical) applications that external isolation devices (diodes or MOSFETS) are employed; see ACAN-105 for suggested devices.

MECHANICAL DIMENSIONS (Nominal)

PQU650-xx MODELS

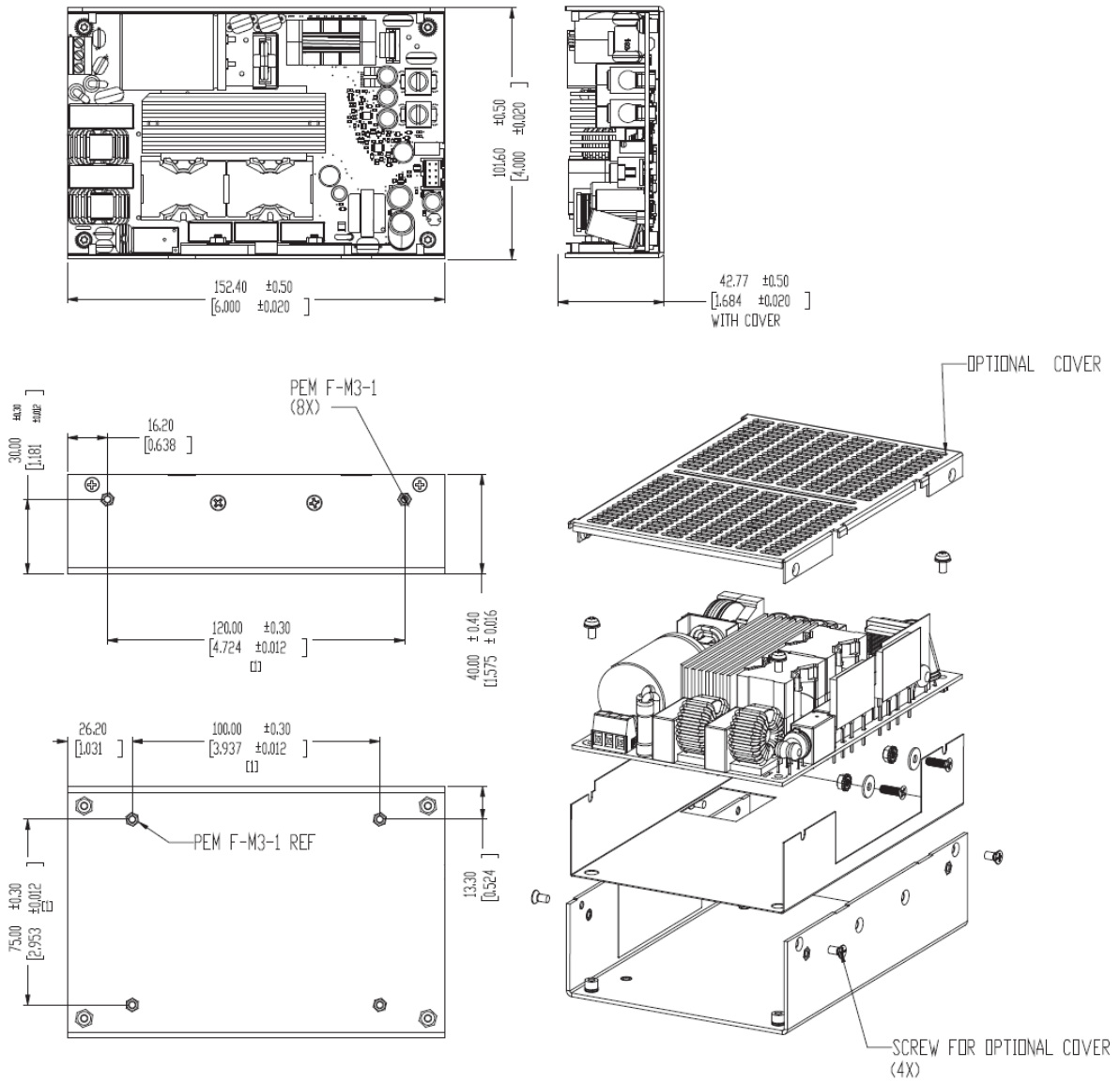

Input Connector J1	
Phoenix Contact Part# 1715734	
Supported Cable Gauge: 26-12AWG; 0.14-2.5mm^2	
Pin 1	PE/GND
Pin 2	AC Neutral/L2
Pin3	AC Line/L1

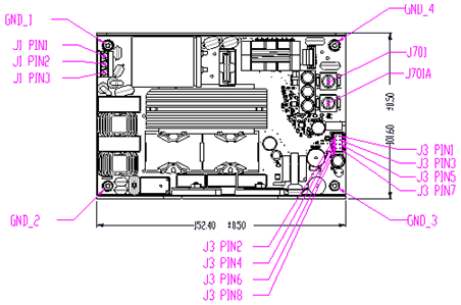

Output Connector J701, J701A	
IHI Connectors; B2A-PCB	
Cable stripped end or with suitable ferrule	
J701	+DC_OUT
J701A	+DC_OUT_RTN

Signal Connector; J3	
PCB Connector: Molex 90130-1108 (C-Grid III™ Series	
Mating Half Housing: Molex 0901420008	
Crimps Terminals/pins Molex 0901190109	
Pin 1	+5V_AUX
Pin 2	PWR_OK
Pin 3	+12V_FAN_RTN
Pin 4	PS_ON
Pin 5	+Remote Sense
Pin 6	-Remote Sense
Pin 7	+12V_FAN
Pin 8	+5V_AUX_RTN

MECHANICAL DIMENSIONS (Nominal)

PQU650-xxP MODELS

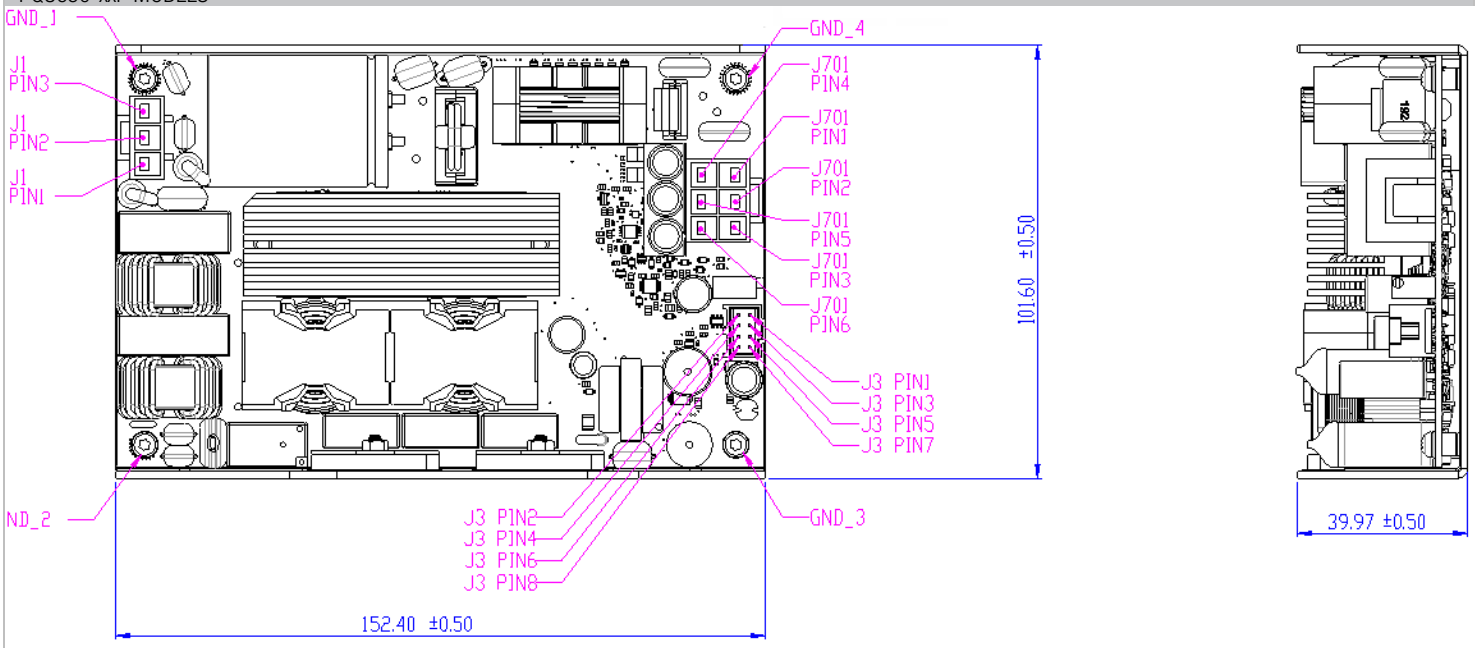

Input Connector J1	
JST Connectors, B03P-VL (VL Series) Mating Half: JST Housing VLP-03V Crimps/Terminals: SVF-61T-P2.0; 20-14AWG & SVT-81T-P2.0 12AWG	
Pin 1	AC Line/L1
Pin 2	AC Neutral/L2
Pin3	PE/GND

Output Connector; J701	
JST Connectors; B06P-VL (VL Series) Mating Half: JST Housing VLP-06V Crimps/Terminals: SVF-61T-P2.0; 20-14AWG & SVT-81T-P2.0 12AWG	
Pin 1	+DC_OUT_RTN
Pin 2	
Pin 3	
Pin 4	+DC_OUT
Pin 5	
Pin 6	

Signal Connector; J3	
PCB Connector: Molex 90130-1108 (C-Grid III™ Series Mating Half Housing: Molex 0901420008 Crimps Terminals/pins Molex 0901190109	
Pin 1	+5V_AUX
Pin 2	PWR_OK
Pin 3	+12V_FAN_RTN
Pin 4	PS_ON
Pin 5	+Remote Sense
Pin 6	-Remote Sense
Pin 7	+12V_FAN
Pin 8	+5V_AUX_RTN

SAFETY CONSIDERATIONS

1. This power supply is a component level power supply intended for use in Class I applications.
2. A protective bonding conductor from the end product protective earthing terminal must be tied to connector J1 (relevant pin dependent on connector type).
3. The primary heatsink is considered a live primary circuit and should not be touched. It is recommended that the primary heatsink be kept at least 4mm from chassis/ground and 8mm from secondary (SELV) circuitry. In all cases, the applicable safety standards must be applied to ensure proper creepage and clearance requirements are met.
4. This product is subject to the following operating requirements and the Life and Safety Critical Application Sales Policy: https://www.murata-ps.com/requirements/
5. The power supply has been evaluated for 5000m altitude and tropical climatic conditions for China.
6. Double pole/neutral fusing is used; the product label is annotated accordingly.
7. If the product is used with the PQU650 cover assembly the relevant safety creepage and clearance requirements are preserved when the PQU650 if so installed.
8. For all deployment installed chassis mounting screws, the End User should ensure that the screw does not protrude by more than two (2) threads through the captive PEM mounted in the "U" channel.
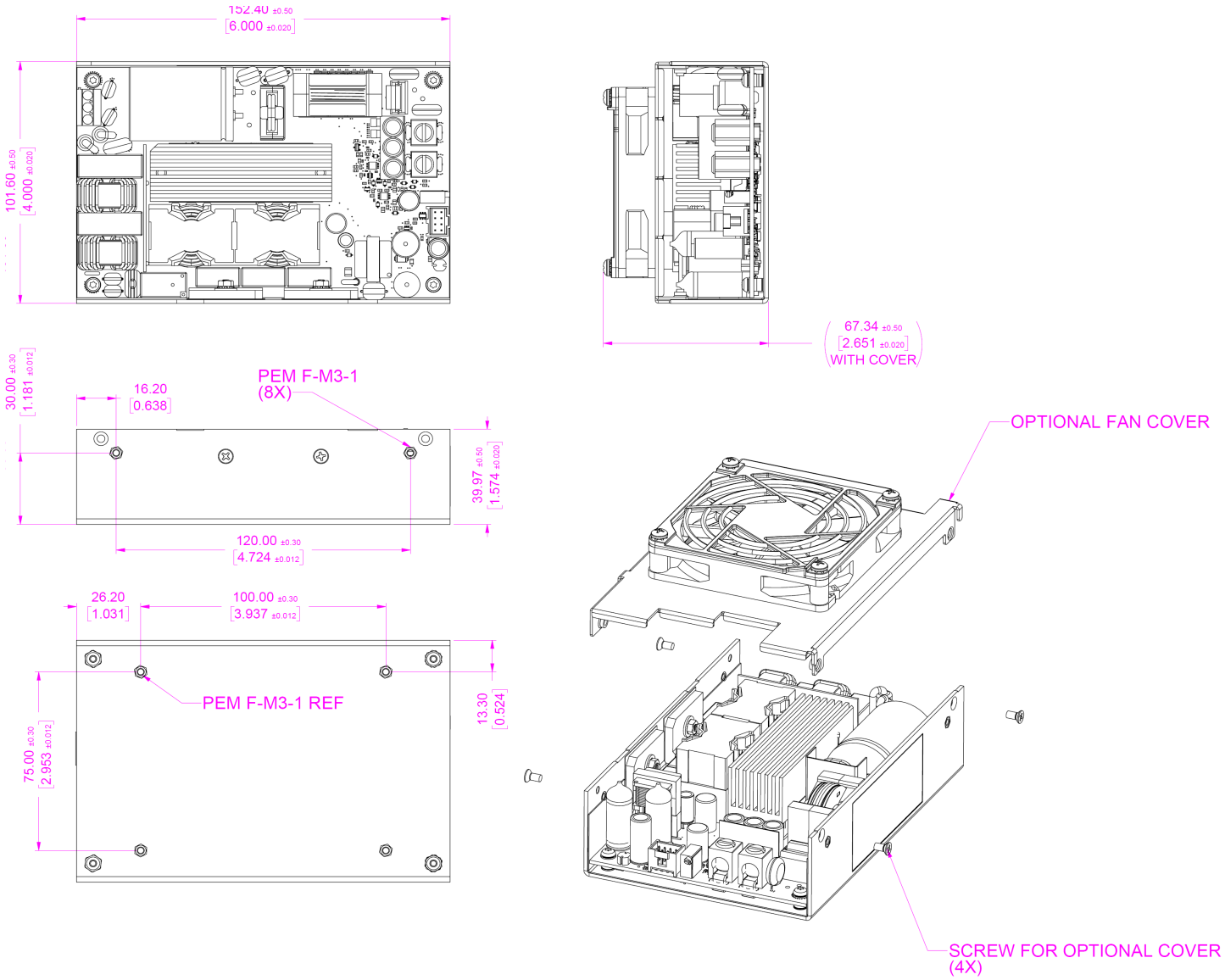
PQU650-F-COVER ASSEMBLY VIEW (APPLICABLE TO PQU650-XX AND PQU650-XXP VARIANTS)