High Power/Signal Connectors for Industrial Machinery

PQ Series

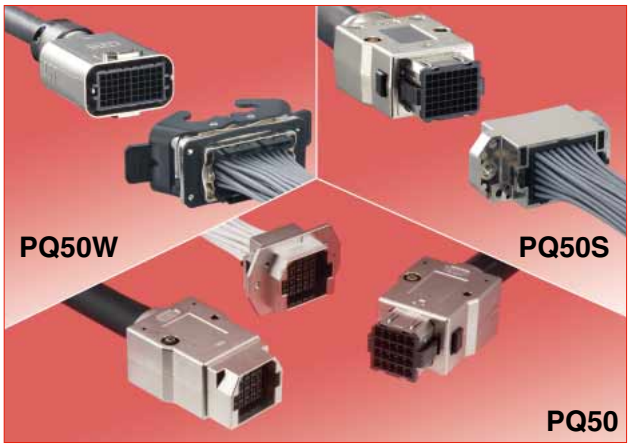

Variations

■General

The PQ series is an interface connector designed to handle high power/signal connections in industrial machinery. Available in a water-resistant or non-water-resistant type, they are capable of handling up to 12.5A/pin (PQ50S and PQ50W) or 19A/pin (PQ50).

■Features

PQ50 and PQ50S Series [Non water-resistant type]

1. Side locking spring structure delivers a clear tactile click.

The left and right buttons disengage the mated lock.
(Side locking system). The easy mating operation delivers a clear tactile click. (Fig.1)

2. Strengthened cable clamps

Cable clamp strength is 98N or more. (* Actual is 400N or more.) The structure will prevent the mated connecter and clamp from detaching against excessive forces.

3. Different cover options

A robust, enhanced, shielded die-cast shell is available on the PQ50 series or a engineered, light weight plated plastic resin shell for the PQ50S series.
The die cast shell delivers an enhanced EMI shield on the PQ50 series and the plated plastic resin of the PQ50S series' cover case and panel shell ensure ESD and EMI performance.

4. Coding key system provides flexibility with multiple options

The coding key system prevents incorrect mating and has multiple variations available.

5. Rear mounted panel shell is available.

After attaching the panel shell to the chassis, it is possible to install or remove the crimp housing. (Fig.2)

6. Reliable ground connection structure.

The crimp contacts can be mounted directly onto the panel shell with screws which enhances the grounding connections. (Fig.3)

7. Supports NFPA79 compliant cables (with 600V capability).

(PQ50 Series)

Due to restrictions on the AWM cables by NFPA79 revision, the requirements of listed cables has increased for wires used in industrial machines in the U.S.A. This product complies with the restrictions and requirements of NFPA79.

Side locking structure emits a tactile click and produces a secure lock

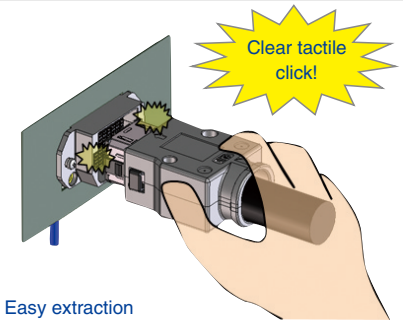

Fig.1

It is possible to insert the terminated housing from the rear

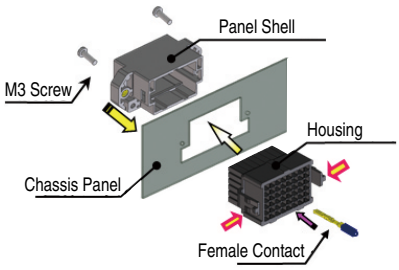

Fig.2

Easy and reliable ground connection

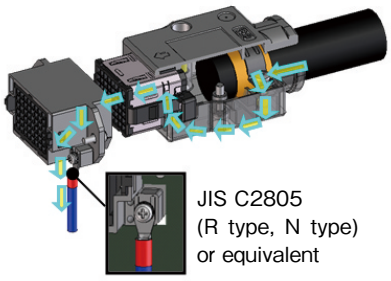

Fig.3

Dec.1.2018 Copyright 2018 HIROSE ELECTRIC CO., LTD. All Rights Reserved.

[Water-resistant type] PQ50W Series

1. Water resistant (IP65)

Rated at IP65 when in the mated condition.

2. Special locking structure.

Special lever and cam structure delivers easier operation and assists with the insertion and extraction of this connector. (Fig.1)

3. Rear mounted unit offers easy operations.

Male and Female plastic crimp case can be installed not only for panel side metal shell but also plug side one. (Fig.2)

4. Metal plated cover of engineering plastic resin adds strength and EMI protection.

This robust connector uses a metal plated material of special engineering plastic for the cover and panel shell to ensure high ESD and EMI performance.

5. Independent ground contact structure.

Secure grounding is accomplished by use of the plated plastic cover and the independent ground contacts. (Fig.3)

6. Coding key system provides flexibility with multiple options

The coding key system prevents incorrect mating and has multiple variations available.

[Contact variations]

1. Available contact options

Two styles are available; one with 19A/pin contacts or one with 12.5A/pin contacts.

2. Lance protection structure

The side wall of the contact prevents lance deformation and helps to prevent tangled wires. (Fig.4)

3. Sequential contacts of different length are available

Two types of different contact length are available for the male contact. (Fig.5)

4. Highly reliable contact structure

The female contact assures a reliable connection by using multiple contact points and a unique spring structure. (Fig.6)

Special locking structure with lever

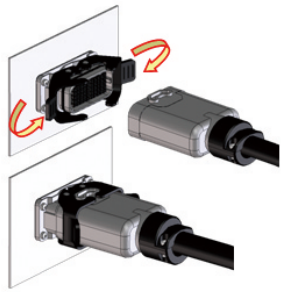

Fig.1

Supports mounting from the backside of the panel

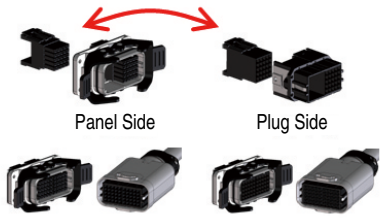

Panel Side:Female Cont. Panel Side:Male Cont.
Plug Side: Male Cont. Plug Side: Female Cont.

Fig.2

Independent Ground Contacts

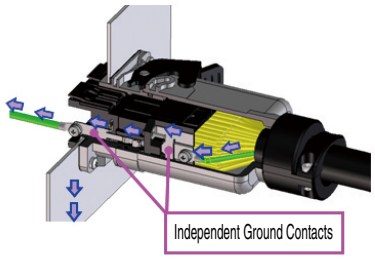

Fig.3

Lance Protection Structure

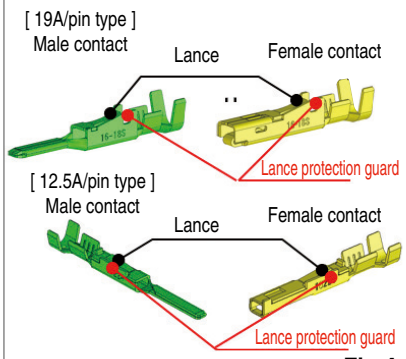

Fig.4

Different length sequential contacts

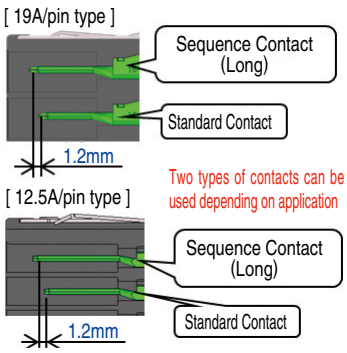

Fig.5

Highly Reliable Contact Structure

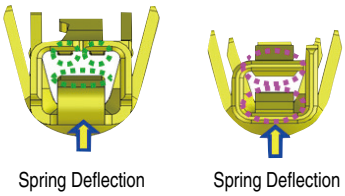

Multiple contact points and very flexible spring design.

Fig.6

Dec.1.2018 Copyright 2018 HIROSE ELECTRIC CO., LTD. All Rights Reserved.

■Product Specifications

[Non water-resistant type] PQ50 Series

Ratings	Voltage	AC/DC 600V		Operating Temp. Range	–40℃ to +105℃
	Current	19A/pin	With UL1015 16 AWG ＊Depending on current capacity of the cable used.	Storage Temp. Range	–55℃ to +85℃

Items	Specifications	Conditions
1. Contact resistance	1 10mΩ max	Measured at 100mA
2. Insulation resistance	Minimum of 5,000MΩ	Measured at DC 500V
3. Withstand voltage	No flashover or breakdown.	Apply AC 2,200V for one minute.
4. Durability	Contact resistance: Increase by 10mΩ or less from the initial value.	Perform 500 mating cycles.
5. Vibration resistance	①No electrical discontinuity of 10μs or more. ②No broken, cracked or loosened parts.	Frequency 10 to 55 Hz (5 min/cycle). With half amplitude 0.75mm, 2 hours each for 3 directions.
6. Shock resistance		Acceleration 490m/s^2, duration 11ms, half-sine wave, 3 times each for 6 axial directions.
7. Temperature cycles	①Change of contact resistance: 20mΩ or less ②Insulation resistance: minimum of 1,000MΩ ③No broken, cracked or loosened parts.	Temperature: –55 → +15 to 35 → +105 → +15 to +35℃ Time: 30 → 2 to 3 → 30 → 2 to 3 min. Subjected to 5 cycles of time and temp as noted.
8. Moisture resistance in steady state	①Change of contact resistance: 20mΩ max ②Insulation resistance: minimum of 1,000MΩ (after drying). ③No breakage, cracks or loosened parts.	Left in environment of 60℃ ±2° and humidity of 90% to 95% for 96 hours.
9. Salt water spray	No significant corrosion or damage that impairs functioning.	5% concentration of salt water spray for 48 hours. (in mated condition)

1 Excluding conductor resistance of the cable.
＊For test methods not described here, JIS C 5402 is applied.

[Non water-resistant type] PQ50S Series

Rating	Voltage	AC/DC 300V		Operating Temp. Range	–40℃ to +105℃
	Current	12.5A/pin	With UL1007 18 AWG ＊Depending on current capacity of the cable used.	Storage Temp. Range	–55℃ to +85℃

Items	Specifications	Conditions
1. Contact resistance	1 5mΩ max	Measured at 100mA
2. Insulation resistance	Minimum of 5,000MΩ	Measured at DC 500V
3. Withstand voltage	No flashover or breakdown.	Apply AC 2,200V for one minute.
4. Durability	Contact resistance: Increase by 10mΩ or less from the initial value.	Perform 500 mating cycles.
5. Vibration resistance	①No electrical discontinuity of 10μs or more. ②No broken, cracked or loosened parts.	Frequency 10 to 55 Hz (5 min/cycle) With half amplitude 0.75mm, 2 hours each for 3 directions.
6. Shock resistance		Acceleration 490m/s^2, duration 11ms, half-sine wave, 3 times each for 6 axial directions.
7. Temperature cycles	①Change of contact resistance: 10mΩ or less ②Insulation resistance: Minimum of 1,000MΩ ③No broken, cracked or loosened parts.	Temperature: –55 → +15 to 35 → +105 → +15 to +35℃ Time: 30 → 2 to 3 → 30 → 2 to 3 min. Subjected to 5 cycles of time and temp. as noted.
8. Moisture resistance in steady state	①Change of contact resistance: 10mΩ or less ②Insulation resistance: Minimum of 1,000MΩ (after drying). ③No broken, cracked or loosened parts.	Left in environment of 60℃ ±2° and humidity of 90% to 95% for 96 hours.
9. Salt water spray	No significant corrosion or damage that impairs functioning.	5% concentration of salt water spray for 48 hours. (in mated condition)

1 Excluding conductor resistance of the cable.
＊For test methods not described here, JIS C 5402 is applied.

Dec.1.2018 Copyright 2018 HIROSE ELECTRIC CO., LTD. All Rights Reserved.

[Water-resistant type] PQ50W Series

Ratings	With 12.5A/pin type contacts				
	Voltage	AC/DC 300V		Operating Temp. Range	–40℃ to +105℃
	Current	12.5A/pin	With UL1007 18 AWG ＊Depending on current capacity of the cable used.	Storage Temp. Range	–55℃ to +85℃

Items	Specifications	Conditions
1. Contact resistance	1 5mΩ max	Measured at 100mA
2. Insulation resistance	Minimum of 5,000MΩ	Measured at DC 500V
3. Withstand voltage	No flashover or breakdown.	Apply AC 2,200V for one minute.
4. Durability	Contact resistance : Increase by 10mΩ or less from the initial value.	Perform 500 mating cycles.
5. Vibration resistance	①No electrical discontinuity of 10μs or more. ②No broken, cracked or loosened parts.	Frequency 10 to 55 Hz (5 min/cycle) With half amplitude 0.75mm, 2 hours each for 3 directions.
6. Shock resistance		Acceleration 490m/s^2, duration 11ms, half-sine wave, 3 times each for 6 axial directions.
7. Temperature cycles	①Change of contact resistance: 10mΩ or less ②Insulation resistance : 1,000MΩ or more ③No broken, cracked or loosened parts.	Temperature : –55 → +15 to 35 → +105 → +15 to +35℃ Time : 30 → 2 to 3 → 30 → 2 to 3 min. Subjected to 5 cycles of time and temp. as noted.
8. Moisture resistance in steady state	①Change of contact resistance : 10mΩ or less ②Insulation resistance : 1,000MΩ or more (after drying) ③No broken, cracked or loosened parts.	Left in environment of 60℃ ±2° and humidity of 90% to 95% for 96 hours.
9. Salt water spray	No significant corrosion or damage that impairs functioning.	5% concentration of salt water spray for 48 hours. (in mated condition)
10. Water resistance	IP65	

1 Excluding conductor resistance of the cable.
＊For test methods not described here, JIS C 5402 is applied.

■Materials / Finish

PQ50 Series

Item	Parts	Materials	Finish	Remarks
Receptacle	Crimp case	PBT resin	Black	UL94V-0
	Panel Shell	Zinc die cast	Nickel plating	-
Plug	Crimp case	PBT resin	Black	UL94V-0
	Crimp case Shell	Stainless steel	Nickel plating	————
	Cover case	Zinc die cast		
	M4 pan head machine screw	Steel		
	Clamp metal	Steel		
In-line plug	Crimp case	PBT resin	Black	UL94V-0
	In-line plug shell	Zinc die cast	Nickel plating	————
	In-line cover case			
	M4 pan head machine screw	Steel		
	Clamp metal	Steel		

PQ50S Series

Item	Parts	Materials	Finish	Remarks
Receptacle	Crimp case	PBT resin	Black	UL94V-0
	Panel Shell	Heat-resistant engineering plastic resin	Nickel plating	————
	M4 insert nut	Brass		
Plug	Crimp case	PBT resin	Black	UL94V-0
	Crimp case Shell	Stainless steel	Nickel plating	————
	Cover case	Heat-resistant engineering plastic resin		UL94V-0
	Clamp metal	Steel		————
	M4 insert nut	Brass		

Dec.1.2018 Copyright 2018 HIROSE ELECTRIC CO., LTD. All Rights Reserved.

Dec.1.2018 Copyright 2018 HIROSE ELECTRIC CO., LTD. All Rights Reserved.

PQ50W Series

Item	Parts	Materials	Finish	Remarks
Crimp case	Crimp case	PBT resin	Black	UL94V-0
Receptacle	Panel Shell	Heat-resistant engineering plastic resin	Nickel plating	UL94V-0
	Ground contact	Stainless steel		———
	O-ring for mating	NBR	Black	
	Lock lever	PA resin		UL94V-0
	Rubber packing	NBR		———
Plug	Plug shell	Heat-resistant engineering plastic resin	Black	UL94V-0
	Ground contact	Stainless steel	Nickel plating	———
	M2 tapping screw	Steel	Trivalent chromate	
	Cover case		Nickel plating	
	Gasket	NBR	Red	
	Clamp metal (body)	Heat-resistant engineering plastic resin	Black	UL94V-0
	Cable clamp			
	M3 insert nut	Brass	Nickel plating	———
	M3 pan head machine screw	Steel		

● Contacts (PQ50, PQ50S, PQ50W)

Part No.	Parts	Materials	Finish	Remarks
PQ50 -15PCFA	Male contact	Copper alloy	Gold plating (contact area) + Tin plating (barrel area)	———
PQ50A -15PCFA				
PQ50 -15SCFA	Female contact			
PQ50 -1618PCFA	Male contact			
PQ50A -1618PCFA				
PQ50 -1618SCFA	Female contact			
PQ50 -2022PCFA	Male contact			
PQ50A -2022PCFA				
PQ50 -2022SCFA	Female contact			
PQ50S -1822PCFA	Male contact			
PQ50SA-1822PCFA				
PQ50S -1822SCFA	Female contact			
PQ50S -2428PCFA	Male contact			
PQ50SA-2428PCFA				
PQ50S -2428SCFA	Female contact			

■Product Number Structure

Refer to the chart below when determining the product specifications from the product number.
Please select from the product numbers listed in this catalog when placing orders.

●Crimp Housing

PQ 50 W S – 25 P – UNIT

❶ ❷ ❸ ❹ ❺ ❻ ❼

❶ Series name	PQ	
❷ Wiring style	Crimping	
❸ Connector specifications	W…Water-resistant type	None…Non water-resistant type
❹ Contact size	S…Small contact (12.5A/pin) type	None…Standard contact (19A/pin) type
❺ Shell size	25…25 pos. unit 20…20 pos. unit	48…48 pos. unit
❻ Contact type	P…Male contact	S…Female contact
❼ Shapes	UNIT…Rear mount multiple unit (PQ50W)	None… (PQ50, PQ50S)

●Crimp contact

PQ 50 S A – 1822 PC F A

❶ ❷ ❸ ❹ ❺ ❻ ❼ ❽

❶ Series name	PQ	
❷ Wiring style	Crimping	
❸ Contact size	S…Small contact (12.5A/pin) type	None…Standard contact (19A/pin) type
❹ Contact usage	A…Sequence contact (long contact)	None…Standard contact
❺ Applicable cable type	15……14 to 15 AWG (UL1015) 1618…16 to 18 AWG (UL1007, UL1015) 1822…18 to 22 AWG (UL1007) 17 AWG	2022…20 to 22 AWG (UL1007, UL1015) 2428…24 to 28 AWG (UL1007) 23 AWG
❻ Contact type	PC…Male contact	SC…Female contact
❼ Contact shapes	F…End-to-end contacts (on reel)	None…Discrete contacts
❽ Contact plating type	A…Gold plating (contact area)	

● Clamp metal

PQ W – CM (17.5)

❶ ❷ ❸ ❹

❶ Series name	PQ	
❷ Connector specifications	W···Water-resistant type	None···Non water-resistant type
❸ Clamp name	CM···Clamp metal	
❹ Applicable cable diameter	(15.0)···For applicable cable diameter ϕ15.0 (17.5)···For applicable cable diameter ϕ17.5 (22.0)···For applicable cable diameter ϕ22.0	

PQ50, PQ50S Series

PQ 50 S – 48 P – PC M

❶ ❷ ❸ ❹ ❺ ❻ ❼

❶ Series name	PQ	
❷ Wiring style	Crimping	
❸ Contact size	S···Small contact (12.5A/pin) type	None···Standard contact (19A/pin) type
❹ Shell size	20···20 pos. shell type	48···48 pos. shell type
❺ Contact type	P···Male contact	S···Female contact
❻ Case type	PC···Plug cover case FL···Panel shell	JC···In-line plug cover case DS···In-line plug shell
❼ Case material	M···Heat-resistant engineering plastic resin	None···Zinc die cast

PQ50W Series

PQ 50 W – 50 – PC

❶ ❷ ❸ ❹ ❺

❶ Series name	PQ
❷ Wiring style	Crimping
❸ Connector specifications	Water-resistant type
❹ Shell size	50···50 pos. shell type
❺ Case type	PC···Plug cover case FL···Panel shell

■Functional Diagram

PQ50, PQ50S Series

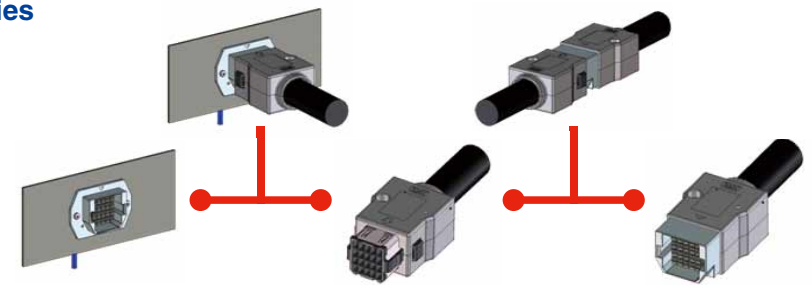

①Panel mount receptacle (Female contact)

②Cable plug (Male contact)

③In-line cable plug (Female contact)

PQ50W Series

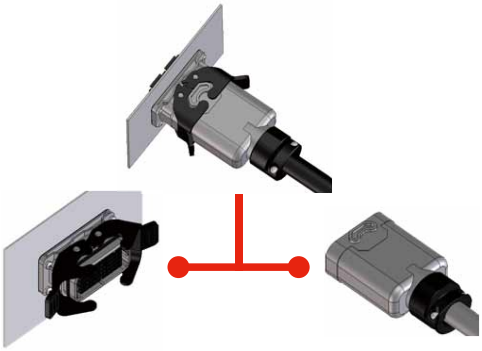

①Panel mount receptacle

②Cable plug

Dec.1.2018 Copyright 2018 HIROSE ELECTRIC CO., LTD. All Rights Reserved.

Dec.1.2018 Copyright 2018 HIROSE ELECTRIC CO., LTD. All Rights Reserved.

■Panel mount receptacle PQ50 Series

■Crimp case (19A/pin, for female contact)

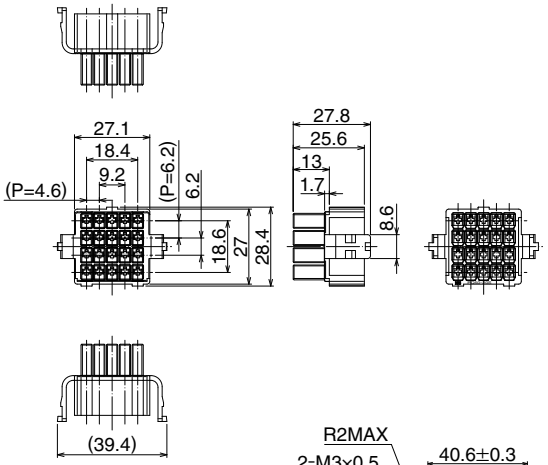

Part No.	HRS No.	Packaging
PQ50-20S	236-2014-2 00	50 pcs/box
PQ50-20S(01)	236-2014-2 01	1 pcs/box

■Panel Shell

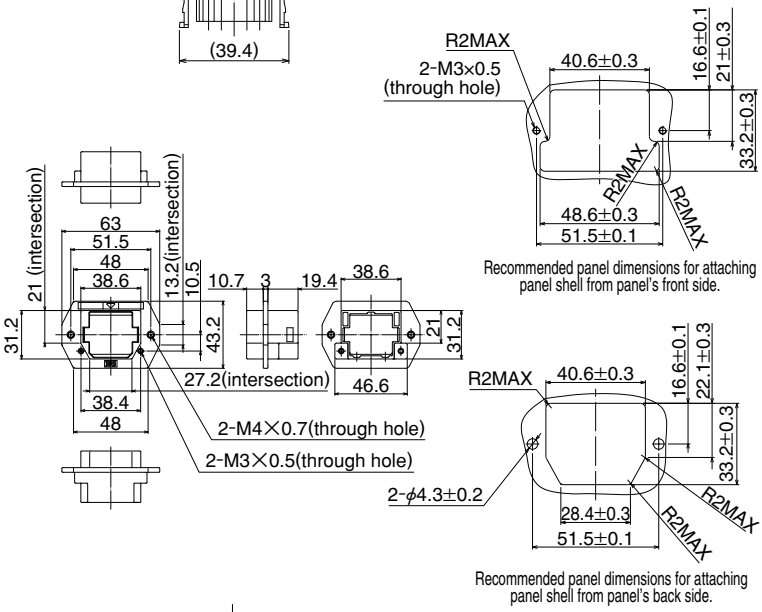

Part No.	HRS No.	Packaging
PQ50-20S-FL	236-2001-0 00	50 pcs/box
PQ50-20S-FL(01)	236-2001-0 01	1 pcs/box

■Cable Plug PQ50 Series

■Crimp case (19A/pin, for male contact)

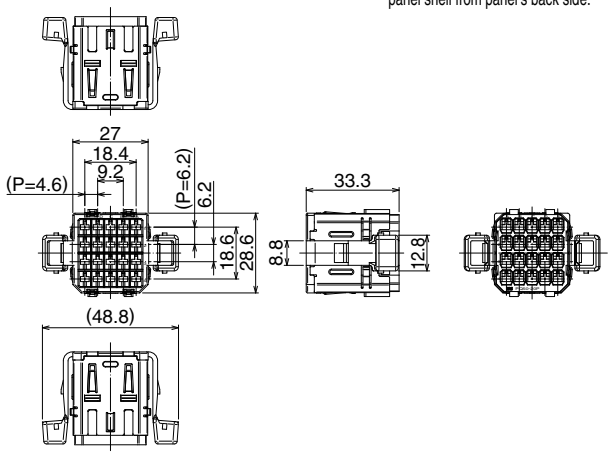

Part No.	HRS No.	Packaging
PQ50-20P	236-2011-4 00	50 pcs/box
PQ50-20P(01)	236-2011-4 01	1 pcs/box

■Plug Cover case

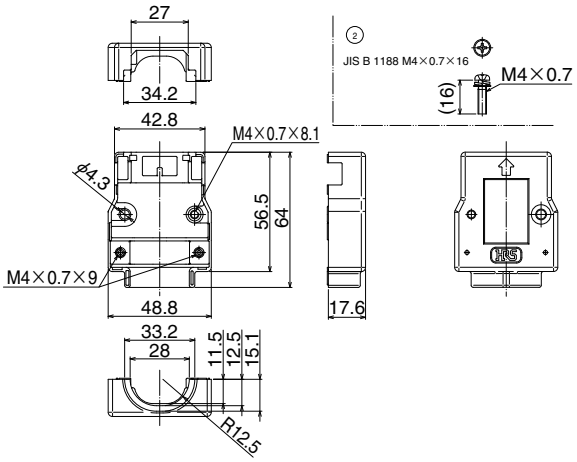

Part No.	HRS No.	Packaging
PQ50-20P-PC	236-2000-8 00	50 pcs/box
PQ50-20P-PC(01)	236-2000-8 01	1 pcs/box

■In-Line Cable Plug PQ50 Series

■ In-line Plug Cover case

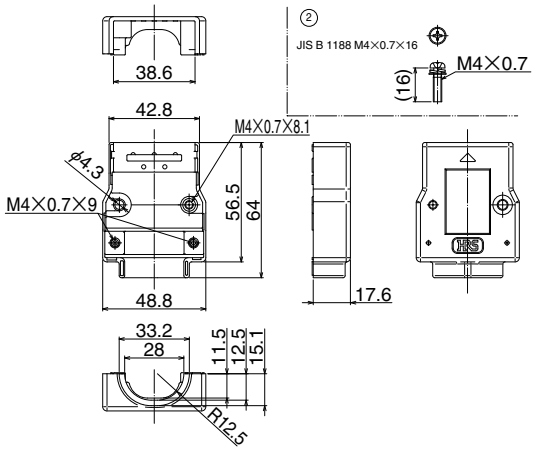

Part No.	HRS No.	Packaging
PQ50-20S-JC	236-2002-3 00	50 pcs/box
PQ50-20S-JC(01)	236-2002-3 01	1 pcs/box

■In-line Plug shell

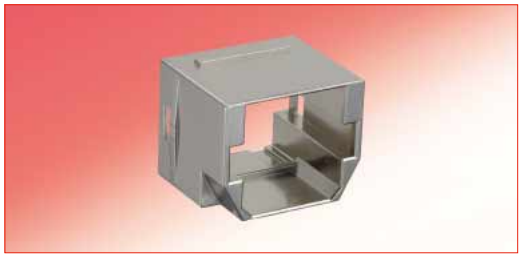

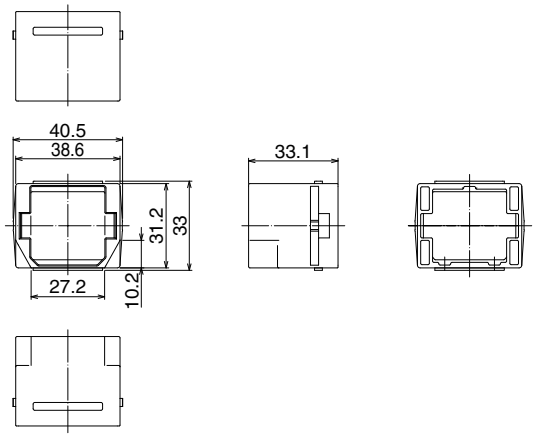

Part No.	HRS No.	Packaging
PQ50-20S-DS	236-2015-5 00	50 pcs/box
PQ50-20S-DS(01)	236-2015-5 01	1 pcs/box

■ Cable Plug PQ50S Series

■Crimp case (12.5A/pin, for male contact)

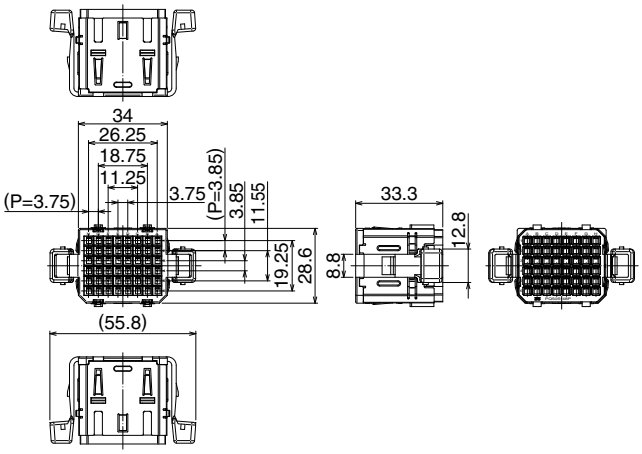

Part No.	HRS No.	Packaging
PQ50S-48P	236-2023-3 00	60 pcs/box
PQ50S-48P(01)	236-2023-3 01	1 pcs/box

■Plug Cover case

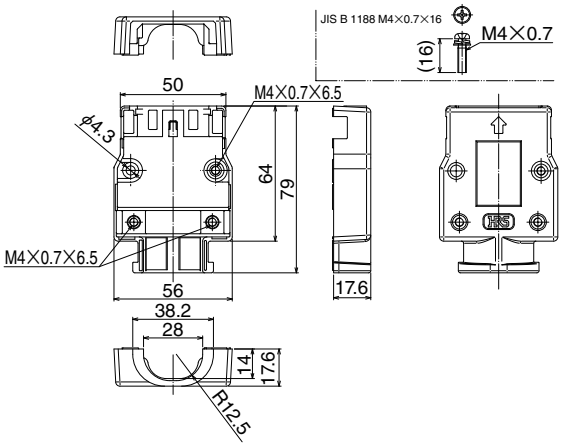

Part No.	HRS No.	Packaging
PQ50S-48P-PCM	236-2003-6 00	60 pcs/box
PQ50S-48P-PCM(01)	236-2003-6 01	1 pcs/box

Dec.1.2018 Copyright 2018 HIROSE ELECTRIC CO., LTD. All Rights Reserved.

■Panel mount receptacle PQ50S Series

■Crimp cace (12.5A/pin, for female contact)

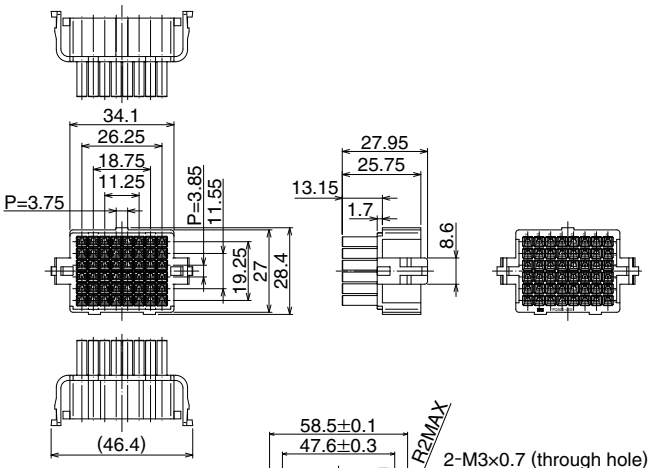

Part No.	HRS No.	Packaging
PQ50S-48S	236-2024-6 00	60 pcs/box
PQ50S-48S(01)	236-2024-6 01	1 pcs/box

■Panel Shell

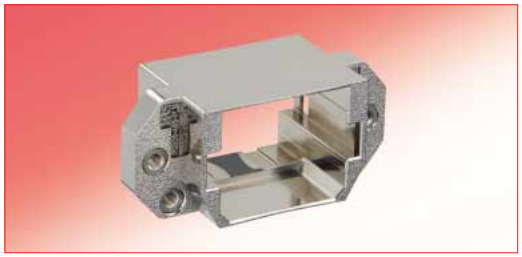

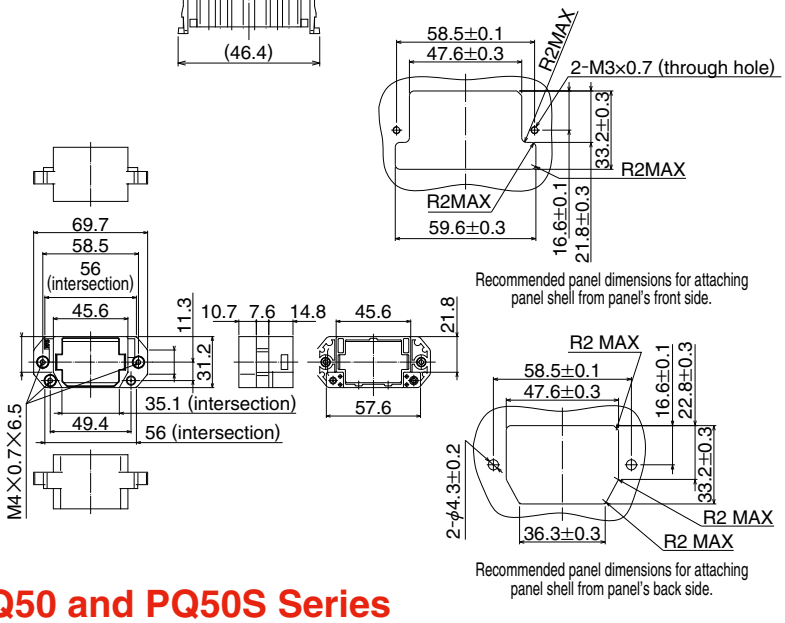

Part No.	HRS No.	Packaging
PQ50S-48S-FLM	236-2004-9 00	60 pcs/box
PQ50S-48S-FLM(01)	236-2004-9 01	1 pcs/box

■Clamp metal common for PQ50 and PQ50S Series

■Clamp metal for φ15.0mm cable type

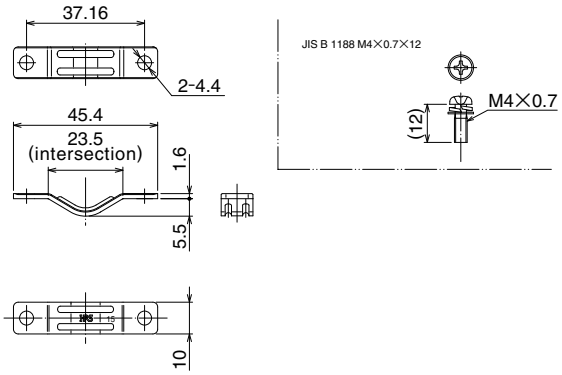

Part No.	HRS No.	Packaging
PQ-CM(15.0)	236-2005-1 00	60 pcs/box
PQ-CM(15.0)(01)	236-2005-1 01	1 pcs/box

■Clamp metal for φ22.0mm cable type

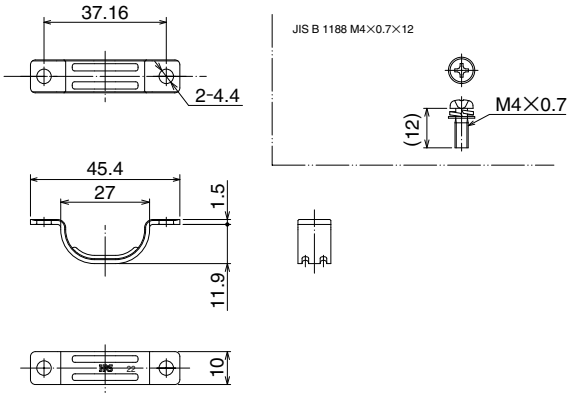

Part No.	HRS No.	Packaging
PQ-CM(22.0)	236-2013-0 00	50 pcs/box
PQ-CM(22.0)(01)	236-2013-0 01	1 pcs/box

Dec.1.2018 Copyright 2018 HIROSE ELECTRIC CO., LTD. All Rights Reserved.

■Cable Plug PQ50W Series

■Crimp case (12.5A/pin, for male contact)

Part No.	HRS No.	Packaging
PQ50WS-25P-UNIT	236-2021-8 00	1 pcs/box

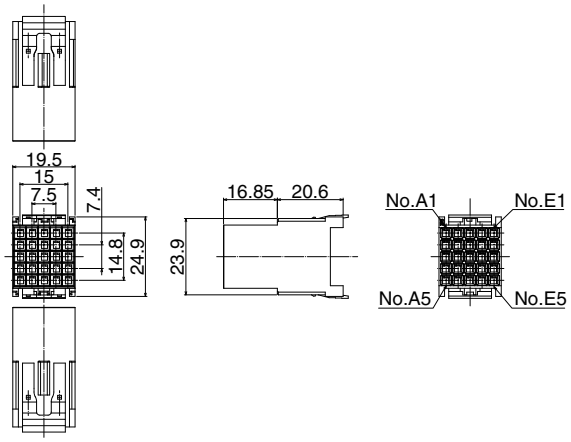

■Crimp case (12.5A/pin, for female contact)

Part No.	HRS No.	Packaging
PQ50WS-25S-UNIT	236-2022-0 00	1 pcs/box

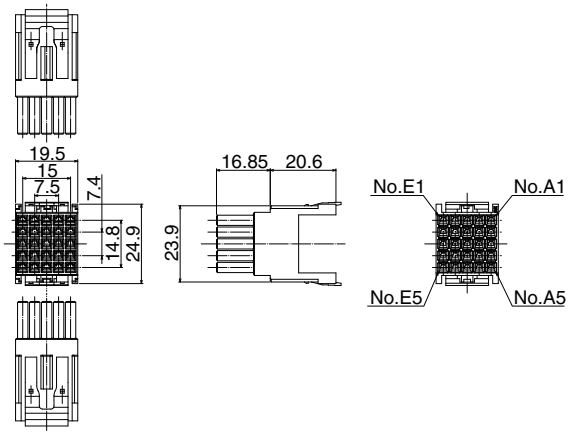

■Panel mount receptacle PQ50W Series

■Panel Shell

Part No.	HRS No.	Packaging
PQ50W-50-FL	236-2020-5 00	1 pcs/box

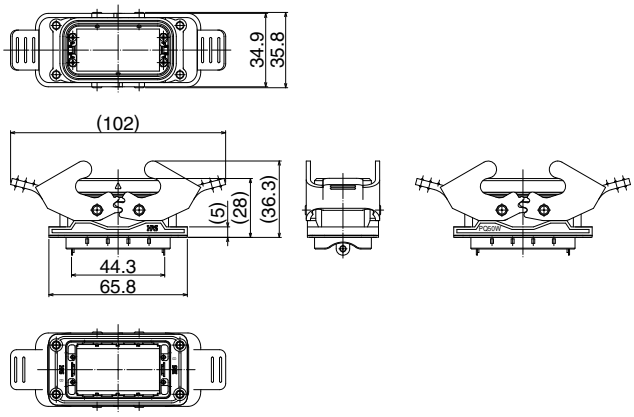

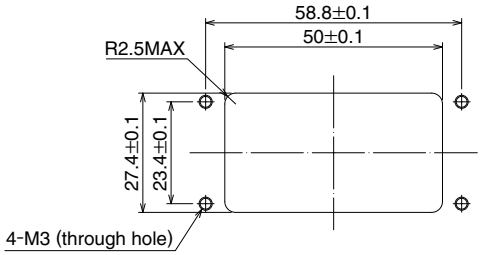

Panel dimensions for attaching panel shell from panel's front side.

Dec.1.2018 Copyright 2018 HIROSE ELECTRIC CO., LTD. All Rights Reserved.

■Cable Plug PQ50W Series

■Cover Case

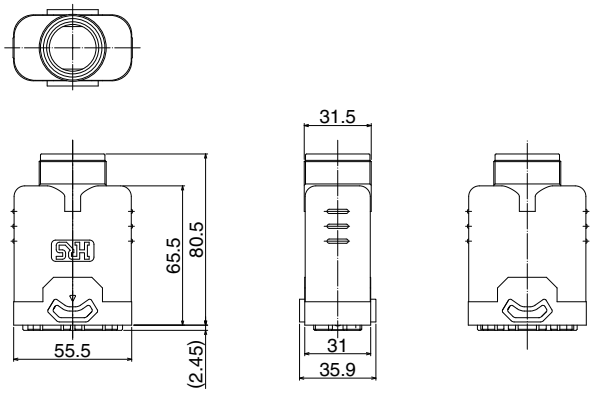

Part No.	HRS No.	Packaging
PQ50W-50-PC	236-2018-3 00	1 pcs/box

■Metal Cable Clamp for PQ50W Series

■Cable clamp for ϕ17.5mm cable type

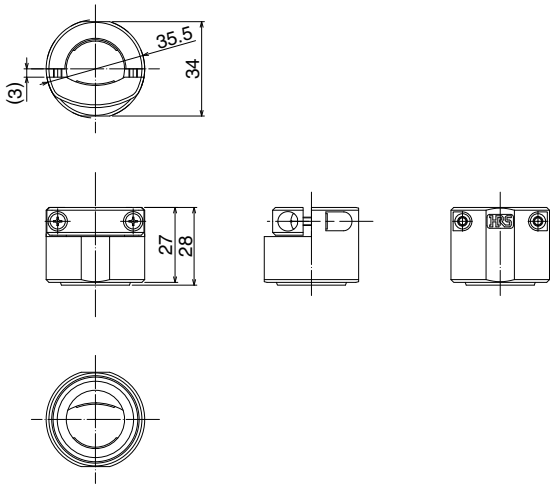

Part No.	HRS No.	Packaging
PQW-CM(17.5)	236-2019-6 00	1 pcs/box

Dec.1.2018 Copyright 2018 HIROSE ELECTRIC CO., LTD. All Rights Reserved.

◆Crimp Contacts

■Male contact (19A/pin type)

PQ50-∗∗PC∗A

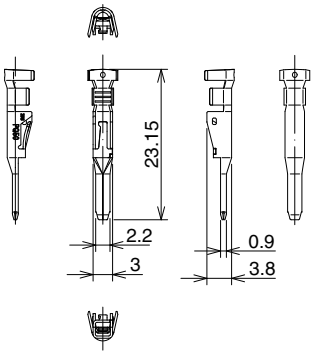

PQ50A-∗∗PC∗A

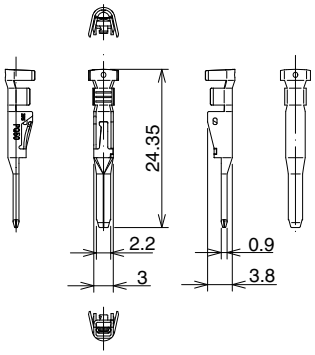

Part No.	HRS No.	Packaging	Applicable Cables
PQ50 -15PCFA(Note)	236-2016-8 00	3,500 pcs/reel	14 to 15 AWG (UL1015) insulator outer diameter max. ϕ3.3mm
PQ50A-15PCFA	236-2073-1 00	3,500 pcs/reel	14 to 15 AWG (UL1015) insulator outer diameter max. ϕ3.3mm
PQ50 -1618PCFA	236-2006-4 00	3,500 pcs/reel	16 to 18 AWG (UL1007, UL1015), insulator outer diameter max. ϕ3.3mm
PQ50A-1618PCFA	236-2007-7 00	3,500 pcs/reel	16 to 18 AWG (UL1007, UL1015), insulator outer diameter max. ϕ3.3mm
PQ50 -2022PCFA	236-2031-1 00	3,500 pcs/reel	20 to 22 AWG (UL1007, UL1015), insulator outer diameter max. ϕ2.7mm
PQ50A-2022PCFA	236-2032-4 00	3,500 pcs/reel	20 to 22 AWG (UL1007, UL1015), insulator outer diameter max. ϕ2.7mm
PQ50 -15PCA	236-2037-8 00	100 pcs/pack	14 to 15 AWG insulator outer diameter max. ϕ3.3mm
PQ50A-15PCA	236-2073-1 00	100 pcs/pack	14 to 15 AWG insulator outer diameter max. ϕ3.3mm
PQ50 -1618PCA	236-2038-0 00	100 pcs/pack	16 to 18 AWG (UL1007, UL1015), insulator outer diameter max. ϕ3.3mm
PQ50A-1618PCA	236-2040-2 00	100 pcs/pack	16 to 18 AWG (UL1007, UL1015), insulator outer diameter max. ϕ3.3mm
PQ50 -2022PCA	236-2039-3 00	100 pcs/pack	20 to 22 AWG (UL1007, UL1015), insulator outer diameter max. ϕ2.7mm
PQ50A-2022PCA	236-2041-5 00	100 pcs/pack	20 to 22 AWG (UL1007, UL1015), insulator outer diameter max. ϕ2.7mm

Note : Please see ATAI-E2926 for the details of UL1015 14 AWG cable crimping.

■Female contact (19A/pin) type

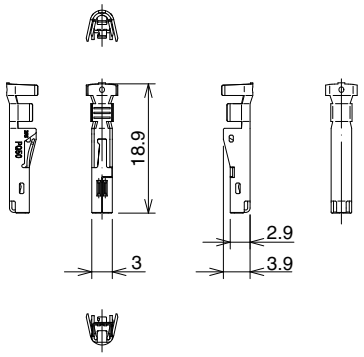

Part No.	HRS No.	Packaging	Applicable Cables
PQ50-15SCFA(Note)	236-2017-0 00	3,500 pcs/reel	14 to 15 AWG (UL1015) insulator outer diameter max. ϕ3.3mm
PQ50-1618SCFA	236-2008-0 00	3,500 pcs/reel	14 to 15 AWG (UL1007, UL1015), insulator outer diameter max. ϕ3.3mm
PQ50-2022SCFA	236-2010-1 00	3,500 pcs/reel	20 to 22 AWG (UL1007, UL1015), insulator outer diameter max. ϕ2.7mm
PQ50-15SCA	236-2043-0 00	100 pcs/pack	14 to 15 AWG (UL1007, UL1015), insulator outer diameter max. ϕ3.3mm
PQ50-1618SCA	236-2044-3 00	100 pcs/pack	16 to 18 AWG (UL1007, UL1015), insulator outer diameter max. ϕ3.3mm
PQ50-2022SCA	236-2045-6 00	100 pcs/pack	20 to 22 AWG (UL1007, UL1015), insulator outer diameter max. ϕ2.7mm

Note : Please see ATAI-E3038 for the details of UL1015 14 AWG cable crimping.

Dec.1.2018 Copyright 2018 HIROSE ELECTRIC CO., LTD. All Rights Reserved.

◆Crimp Contacts

■Male contact (12.5A/pin type)

PQ50S-∗∗∗∗PC∗A

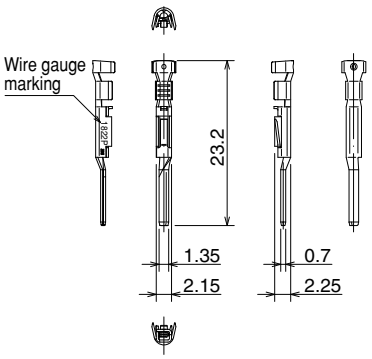

PQ50SA-∗∗∗∗PC∗A

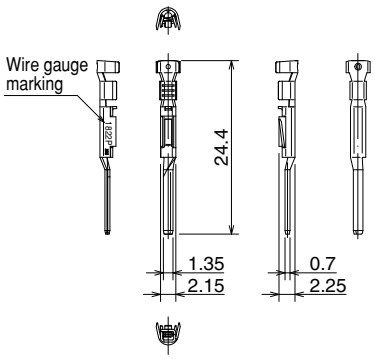

Part No.	HRS No.	Packaging	Applicable Cables
PQ50S -1822PCFA	236-2025-9 00	6,000 pcs/reel	17 to 22 AWG (UL1007), insulator outer diameter max. ϕ2.25mm
PQ50SA-1822PCFA	236-2029-0 00	6,000 pcs/reel	17 to 22 AWG (UL1007), insulator outer diameter max. ϕ2.25mm
PQ50S -2428PCFA	236-2027-4 00	6,000 pcs/reel	23 to 28 AWG (UL1007), insulator outer diameter max. ϕ1.8mm
PQ50SA-2428PCFA	236-2030-9 00	6,000 pcs/reel	23 to 28 AWG (UL1007), insulator outer diameter max. ϕ1.8mm
PQ50S -1822PCA	236-2046-9 00	100 pcs/pack	17 to 22 AWG (UL1007), insulator outer diameter max. ϕ2.25mm
PQ50SA-1822PCA	236-2048-4 00	100 pcs/pack	17 to 22 AWG (UL1007), insulator outer diameter max. ϕ2.25mm
PQ50S -2428PCA	236-2047-1 00	100 pcs/pack	23 to 28 AWG (UL1007), insulator outer diameter max. ϕ1.8mm
PQ50SA-2428PCA	236-2049-7 00	100 pcs/pack	23 to 28 AWG (UL1007), insulator outer diameter max. ϕ1.8mm

■Female contact (12.5A/pin type)

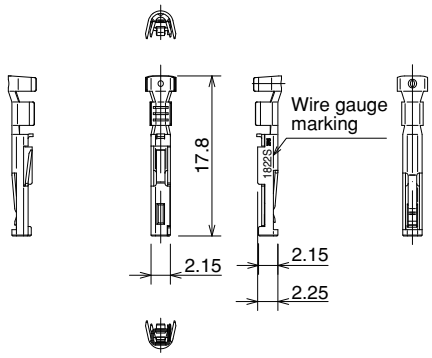

Part No.	HRS No.	Packaging	Applicable Cables
PQ50S-1822SCFA	236-2026-1 00	6,000 pcs/reel	17 to 22 AWG (UL1007), insulator outer diameter max. ϕ2.25mm
PQ50S-2428SCFA	236-2028-7 00	6,000 pcs/reel	23 to 28 AWG (UL1007), insulator outer diameter max. ϕ1.8mm
PQ50S-1822SCA	236-2050-6 00	100 pcs/pack	17 to 22 AWG (UL1007), insulator outer diameter max. ϕ2.25mm
PQ50S-2428SCA	236-2051-9 00	100 pcs/pack	23 to 28 AWG (UL1007), insulator outer diameter max. ϕ1.8mm

Dec.1.2018 Copyright 2018 HIROSE ELECTRIC CO., LTD. All Rights Reserved.

◆Coding Key System

■For 19A/pin type crimp case

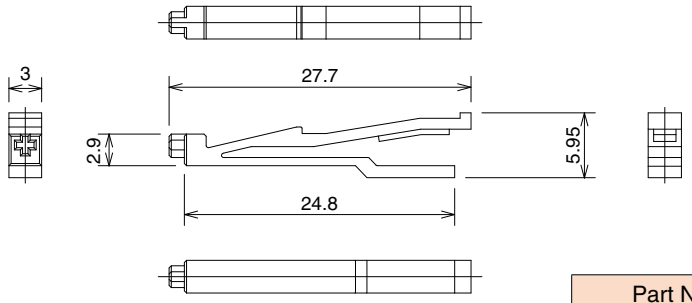

Part No.	HRS No.	Packaging
PQ50-SC-KY	236-2009-2 00	100 pcs/pack

■For 12.5A/pin type crimp case

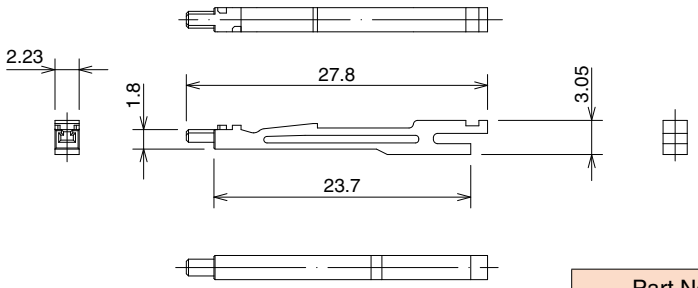

Part No.	HRS No.	Packaging
PQ50S-SC-KY	236-2033-7 00	100 pcs/pack

◆Contact Extraction Tools

■For 19A/pin type crimp housing

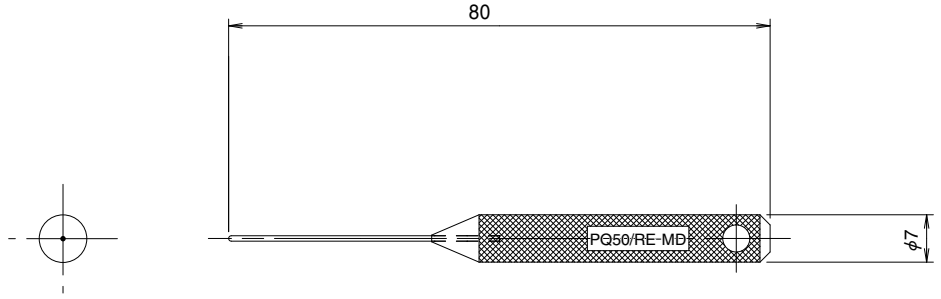

Part No.	HRS No.	Packaging
PQ50/RE-MD	902-2201-0 00	1 pcs/box

■For 12.5A/pin type crimp housing

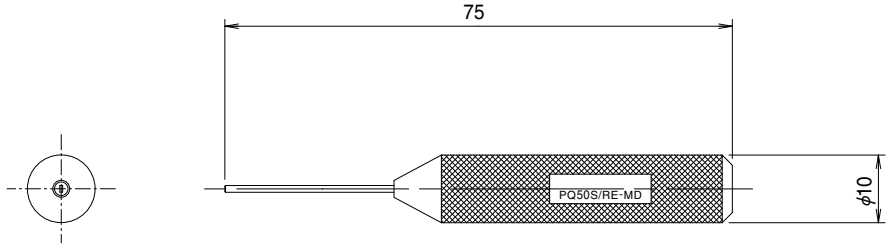

Part No.	HRS No.	Packaging
PQ50S/RE-MD	902-2202-2 00	1 pcs/box

Dec.1.2018 Copyright 2018 HIROSE ELECTRIC CO., LTD. All Rights Reserved.

◆ Hand Crimp Tool

The complete hand tool with crimper frame (1) is available for each terminal and wire gauge. Parts (2) to (8) can be ordered to accommodate repairs and to be able to switch to other wire gauges without having to purchase another complete tool.

①Crimper Frame

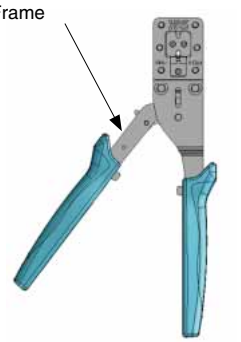

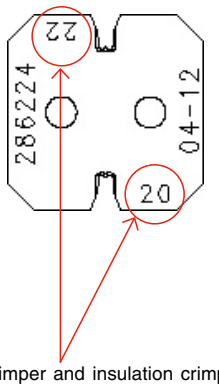

Switch wire crimper and insulation crimper die according to the wire size being used.

Part No.	HRS No.
HT702	250-1001-1 00

①Crimper Frame	＊Unit Name Upper row: Part No. Lower row: HRS No.	Applicable Contacts	Applicable Cables		
			UL	AWG	②IC (Insulation Crimper)
HT702 【250-1001-1】	PQ50-1618(1007) 【250-1002-4】	PQ50-1618PCA PQ50-1618SCA	UL1007	16	286191 【250-1002-4(61)】
				18	
	PQ50-1618(1015) 【250-1003-7】		UL1015	16	285990 【250-1003-7(61)】
				18	
	PQ50A-1618(1007) 【250-1004-0】	PQ50 -1618PCA PQ50A-1618PCA	UL1007	16	286191 【250-1004-0(61)】
				18	
	PQ50A-1618(1015) 【250-1005-2】		UL1015	16	285990 【250-1005-2(61)】
				18	
	PQ50-2022(1007) 【250-1006-5】	PQ50-2022PCA PQ50-2022SCA	UL1007	20	286197 【250-1006-5(61)】
				22	
	PQ50-2022(1015) 【250-1007-8】		UL1015	20	286193 【250-1007-8(61)】
				22	
	PQ50A-2022(1007) 【250-1008-0】	PQ50 -2022PCA PQ50A-2022PCA	UL1007	20	286197 【250-1008-0(61)】
				22	
	PQ50A-2022(1015) 【250-1009-3】		UL1015	20	286193 【250-1009-3(61)】
				22	
	PQ50-14(1015) 【250-1019-7】	PQ50-15PCA PQ50-15SCA	UL1015	14	286629 【250-1019-7(61)】
	PQ50A-14(1015) 【250-1021-9】	PQ50 -15PCA PQ50A-15PCA	UL1015	14	286629 【250-1021-9(61)】
	PQ50S-1820(1007) 【250-1010-2】	PQ50S-1822PCA PQ50S-1822SCA	UL1007	18	286219 【250-1010-2(61)】
				20	
	PQ50S-2022(1007) 【250-1011-5】				286220 【250-1011-5(61)】
				22	
	PQ50SA-1820(1007) 【250-1012-8】	PQ50SA-1822PCA	UL1007	18	286219 【250-1012-8(61)】
				20	
	PQ50SA-2022(1007) 【250-1013-0】				286220 【250-1013-0(61)】
				22	

Ex.: When unit PQ50-1618 (1007) is purchased as a whole, all of parts (2) through (8) are included.
If the insulation crimper (IC) only is needed for PQ50-1618(1007), then 250-1002-4 61 should be ordered.

Dec.1.2018 Copyright 2018 HIROSE ELECTRIC CO., LTD. All Rights Reserved.

Dec.1.2018 Copyright 2018 HIROSE ELECTRIC CO., LTD. All Rights Reserved.

Upper row: Part No. / Lower row: HRS No.					
③WC (Wire Crimper)	④IA (Insulation Anvil)	⑤WA (Wire Anvil)	⑥Contact Holder A	⑦Contact Holder B/C	⑧Crimper Spacer
285991 【250-1002-4(62)】	285992 【250-1002-4(63)】	285993 【250-1002-4(64)】	285994 【250-1002-4(65)】	285995 【250-1002-4(66)】	285996 【250-1002-4(67)】
285991 【250-1003-7(62)】	285992 【250-1003-7(63)】	285993 【250-1003-7(64)】	285994 【250-1003-7(65)】	285995 【250-1003-7(66)】	285996 【250-1003-7(67)】
285991 【250-1004-0(62)】	285992 【250-1004-0(63)】	285993 【250-1004-0(64)】	285994 【250-1004-0(65)】	286192 【250-1004-0(66)】	285996 【250-1004-0(67)】
285991 【250-1005-2(62)】	285992 【250-1005-2(63)】	285993 【250-1005-2(64)】	285994 【250-1005-2(65)】	286192 【250-1005-2(66)】	285996 【250-1005-2(67)】
286194 【250-1006-5(62)】	285992 【250-1006-5(63)】	286196 【250-1006-5(64)】	285994 【250-1006-5(65)】	285995 【250-1006-5(66)】	285996 【250-1006-5(67)】
286194 【250-1007-8(62)】	285992 【250-1007-8(63)】	286196 【250-1007-8(64)】	285994 【250-1007-8(65)】	285995 【250-1007-8(66)】	285996 【250-1007-8(67)】
286194 【250-1008-0(62)】	285992 【250-1008-0(63)】	286196 【250-1008-0(64)】	285994 【250-1008-0(65)】	286192 【250-1008-0(66)】	285996 【250-1008-0(67)】
286194 【250-1009-3(62)】	285992 【250-1009-3(63)】	286196 【250-1009-3(64)】	285994 【250-1009-3(65)】	286192 【250-1009-3(66)】	285996 【250-1009-3(67)】
286630 【250-1019-7(62)】	286631 【250-1019-7(63)】	286632 【250-1019-7(64)】	285994 【250-1019-7(65)】	285995 【250-1019-7(66)】	285996 【250-1019-7(67)】
286630 【250-1021-9(62)】	286631 【250-1021-9(63)】	286632 【250-1021-9(64)】	285994 【250-1021-9(65)】	286192 【250-1021-9(66)】	285996 【250-1021-9(67)】
286223 【250-1010-2(62)】	286225 【250-1010-2(63)】	286226 【250-1010-2(64)】	286233 【250-1010-2(65)】	286234 【250-1010-2(66)】	285996 【250-1010-2(67)】
286224 【250-1011-5(62)】	286225 【250-1011-5(63)】	286226 【250-1011-5(64)】	286233 【250-1011-5(65)】	286234 【250-1011-5(66)】	285996 【250-1011-5(67)】
286223 【250-1012-8(62)】	286225 【250-1012-8(63)】	286226 【250-1012-8(64)】	286233 【250-1012-8(65)】	286235 【250-1012-8(66)】	285996 【250-1012-8(67)】
286224 【250-1013-0(62)】	286225 【250-1013-0(63)】	286226 【250-1013-0(64)】	286233 【250-1013-0(65)】	286235 【250-1013-0(66)】	285996 【250-1013-0(67)】

Ex.: When unit PQ50-1618 (1007) is purchased as a whole, all of parts (2) through (8) are included.
If the insulation crimper (IC) only is needed for PQ50-1618(1007), then 250-1002-4 61 should be ordered.

Creative Links to World Electronics ®

HRS

HIROSE ELECTRIC CO.,LTD.

2-6-3,Nakagawa Chuoh,Tsuzuki-Ku,Yokohama-Shi 224-8540,JAPAN
TEL: +81-45-620-3526 Fax: +81-45-591-3726
http://www.hirose.com
http://www.hirose-connectors.com

HRS The characteristics and the specifications contained herein are for reference purpose. Please refer to the latest customer drawings prior to use.
The contents of this catalog are current as of date of 03/2017. Contents are subject to change without notice for the purpose of improvements.