Panel Potentiometer

Model P270 / P271 / P272 / P278

Features:

- 1,000,000 Cycle Life
- Sealed unit available
- Conductive Plastic element
- Dual Gang available
- Center Tap available
- Several electrical angles available to cross to Honeywell 380, RV4, 485, 53C and 385 Series
- **Meets MIL-PRF-94 requirements.**

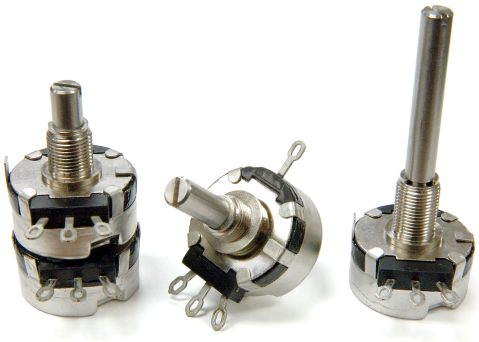

Description:

27,8mm Diameter Conductive Plastic Potentiometer for Heavy Duty Applications and Long Life

Applications:

- Machine Controls
- Welding equipment
- Foot pedal controls

Model Styles Available

Solder Lugs, Single Gang	P270
Solder Lugs, with Center Tap	P271
Solder Lugs, Dual Gang	P272
Solder lugs, Single Gang for heavy side load applications	P278

Electrical Characteristics

T_A = 25°C unless otherwise noted

Resistance Range	200 ohms-1MEG (for "B" taper) 1K-1MEG (for other tapers)
Standard Resistance Tolerance	1K to 1 MEG: ±10% <500 ohms: ±20%
Residual Resistance	6 ohms max.
Nominal Electrical Travel,	See Page 3 for available Electrical angles
Input Voltage, maximum	500 Vdc not to exceed power rating
Rated Power	2.0 Watts @70°C for "B" Taper, 1.0 Watt for other tapers
Dielectric Strength	1000 VAC, 1 minute
Rotational Noise	100mV max.
Insulation Resistance	50M ohms at 500 Vdc
Gang Error (Dual Unit)	±3dB (-40dB to 0dB)

General Note
TT Electronics reserves the right to make changes in product specification without notice or liability. All information is subject to TT Electronics' own data and is considered accurate at time of going to print.

© TT electronics plc

TT Electronics | BI Technologies
413 Rood RD, Suite 7
Calexico, CA 92231
Ph: + 1 (714) 447-2345
www.ttelectronics.com

Mechanical Characteristics

T_A = 25°C unless otherwise noted

Mechanical Travel	312° ± 5°
Rotational Torque, single gang	Dust Proof: 1.0 oz-in. max. Sealed: 1.0 to 2.5 oz-in.
Rotational Stop Strength	200 oz-in
Nut Tightening Strength	25 lb-in max.
Rotational Life	1,000,000 Cycles (10% ΔR)

Environmental Characteristics

T_A = 25°C unless otherwise noted

Operating Temperature	-55°C to +120°C
IP Rating	Dust proof: IP50 Sealed: IP64
Soldering Condition	Wave Soldering 260 °C maximum for 1-3 seconds Hand Soldering 300 °C maximum for 3 seconds
RoHS	Please refer to TT Electronics Website
REACH	Please refer to TT Electronics Website

Packaging

Standard Packaging	Plastic Trays
Hardware	Lock washer and mounting nut

General Note
TT Electronics reserves the right to make changes in product specification without notice or liability. All information is subject to TT Electronics' own data and is considered accurate at time of going to print.
© TT electronics plc

TT Electronics | BI Technologies
413 Rood RD, Suite 7
Calexico, CA 92231
Ph: + 1 (714) 447-2345
www.ttelectronics.com

Ordering Information

P270	-	S	F	2	2	B	R	100K	274

Part Family
P270
P271 (Center Tap)
P272 (Dual gang)
P278 (Heavy Duty)

Seal Type
D - Dust proof
S - Sealed

Shaft Type (See page 4)
S - Slotted
F - Flatted
P - Plain

Shaft Length - "L"
1 - .625"
2 - .875"
3 - 1.000"
4 - 2.000"
5 - .750"

Bushing Length "M"
1 - .250"
2 - .375"
3 - .500"
4 - .312

Resistance Taper (See page 7)
A - Audio (15A)
B - Linear (1B)
C - Reverse Audio (15C)
D - Audio (10A)

Resistance
See Resistance Table

Electrical Angle
Blank = 300°
292 = 292°
284 = 284°
274 = 274°
270 = 270°
263 = 263°
112 = 112°
045 = 45°

Resistance Table

Resistance (Ohms)	200	500	1,000	2,000	5,000	10,000	20,000	50,000	100,000	200,000	500,000	1,000,000
Code	200	500	1K	2K	5K	10K	20K	50K	100K	200K	500K	1MEG

General Note
TT Electronics reserves the right to make changes in product specification without notice or liability. All information is subject to TT Electronics' own data and is considered accurate at time of going to print.
© TT electronics plc

TT Electronics | BI Technologies
413 Rood RD, Suite 7
Calexico, CA 92231
Ph: + 1 (714) 447-2345
www.ttelectronics.com

Shaft Types

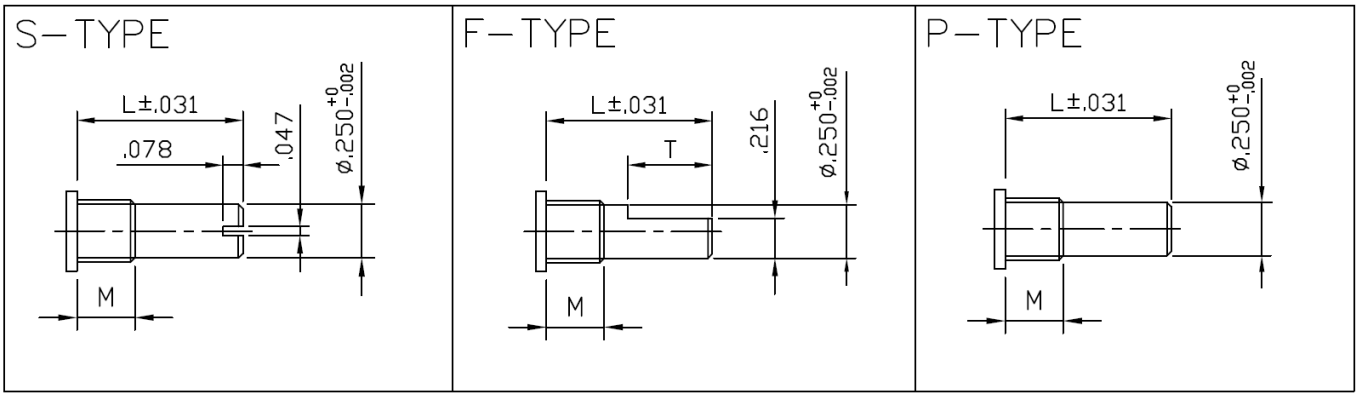

F-TYPE Shaft – Bushing Combinations		
Shaft Length (L)	Bushing Length (M)	Flat Length (T)
(1) = .625	(1) = .250	.315
(1) = .625	(4) = .312	.250
(1) = .625	(2) = .375	.200
(1) = .625	(3) = .500	Not Available
(5) = .750	(2) = .375	.315
(5) = .750	(3) = .500	.200
(2) = .875	(3) = .500	.315
All Other	Combinations	.375

Circuit Diagrams

P270 (without Center Tap)

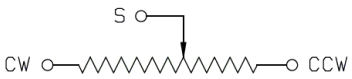

P271 (with Voltage Center Tap)

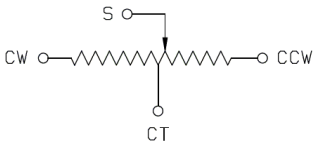

P272 (Dual Gang)

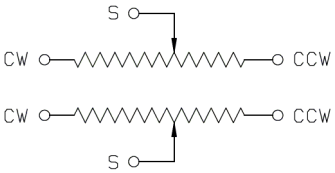

General Note
TT Electronics reserves the right to make changes in product specification without notice or liability. All information is subject to TT Electronics' own data and is considered accurate at time of going to print.
© TT electronics plc

TT Electronics | BI Technologies
413 Rood RD, Suite 7
Calexico, CA 92231
Ph: + 1 (714) 447-2345
www.ttelectronics.com

Outline Dimensions

Model P270

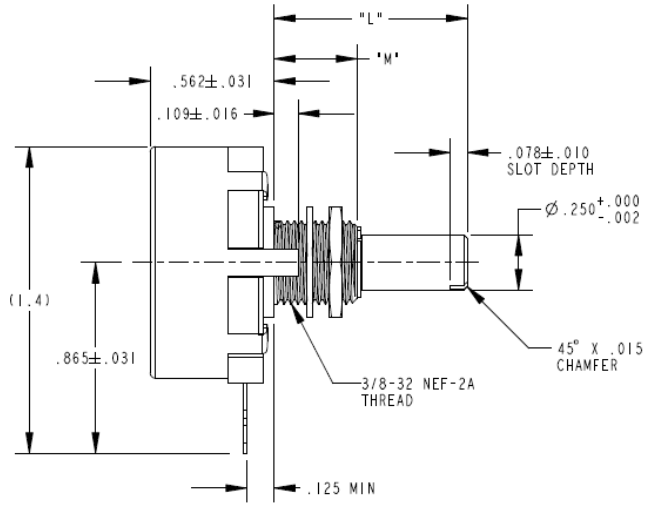

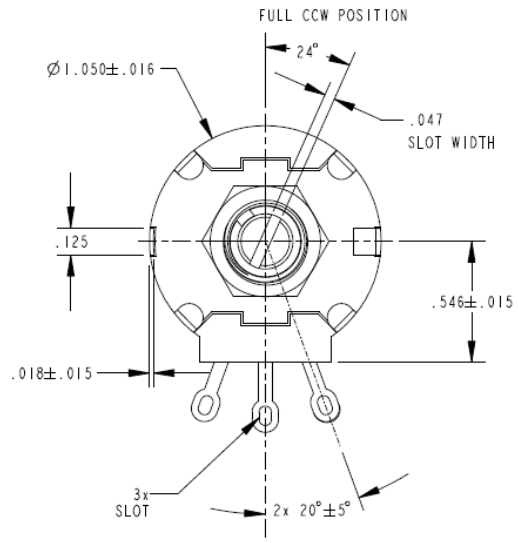

Model P271 (Center Tap)

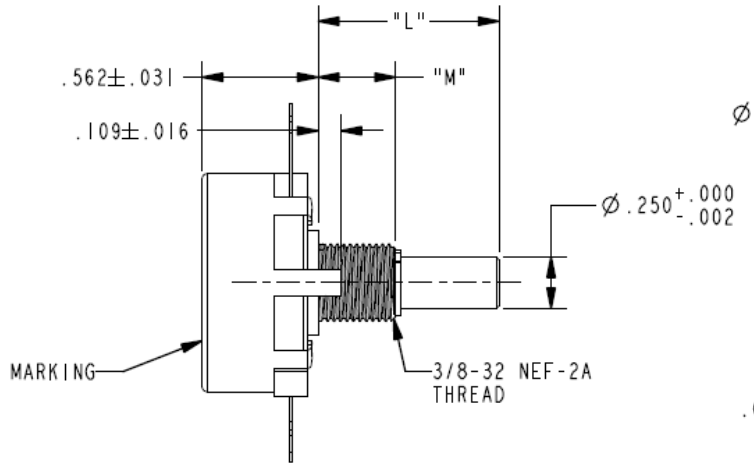

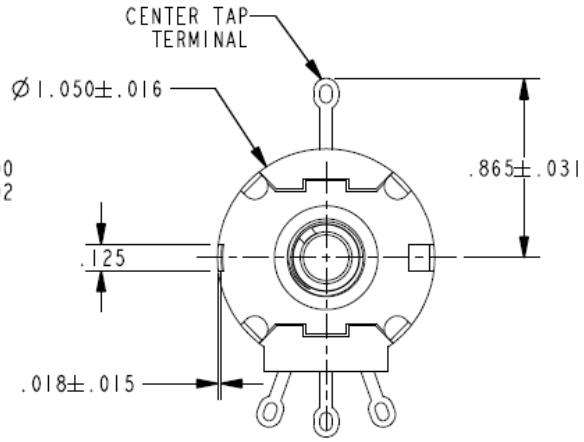

General Note
TT Electronics reserves the right to make changes in product specification without notice or liability. All information is subject to TT Electronics' own data and is considered accurate at time of going to print.

© TT electronics plc

TT Electronics | BI Technologies
413 Rood RD, Suite 7
Calexico, CA 92231
Ph: + 1 (714) 447-2345
www.ttelectronics.com

Outline Dimensions

Model P272 (Dual Gang)

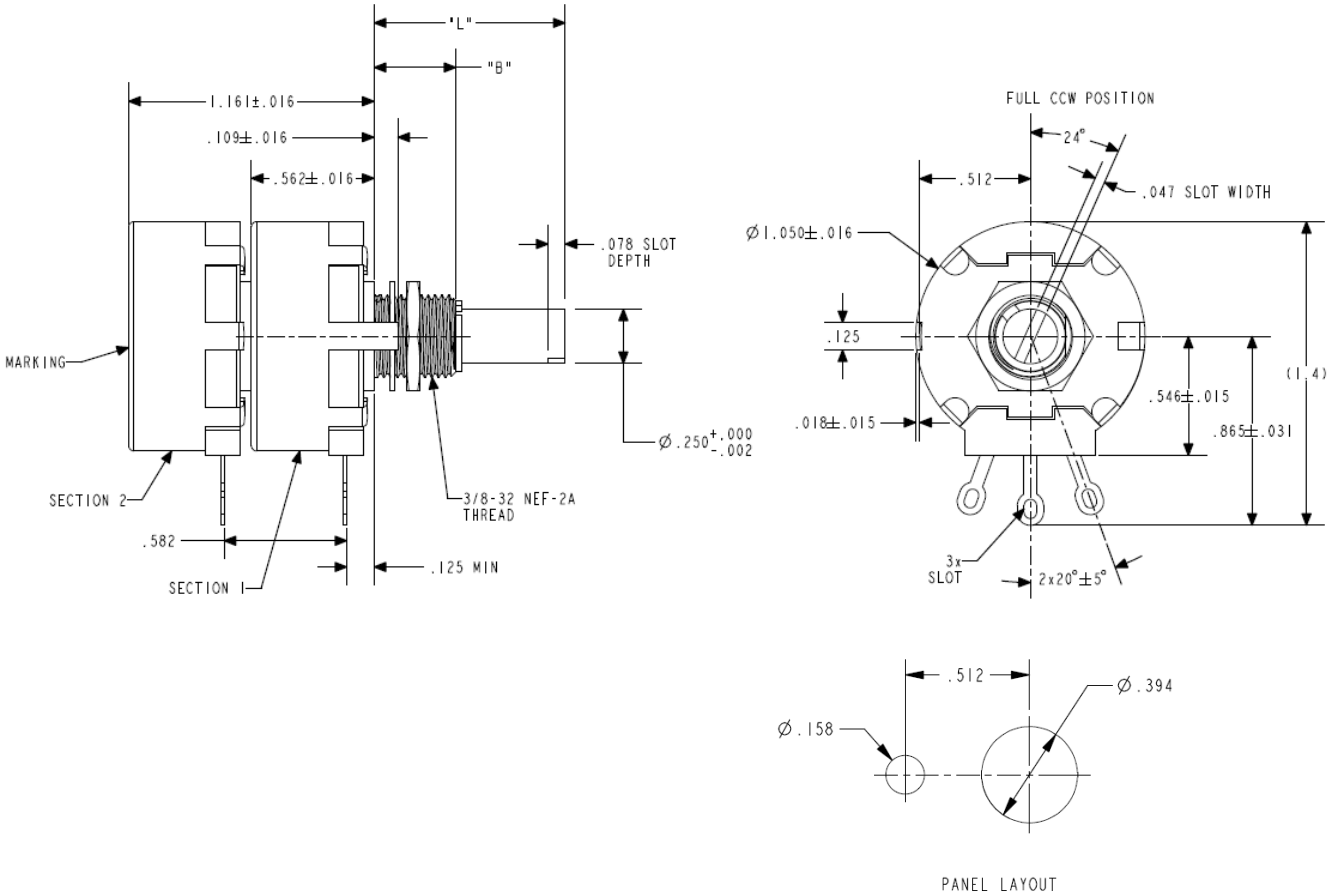

General Note
TT Electronics reserves the right to make changes in product specification without notice or liability. All information is subject to TT Electronics' own data and is considered accurate at time of going to print.
© TT electronics plc

TT Electronics | BI Technologies
413 Rood RD, Suite 7
Calexico, CA 92231
Ph: + 1 (714) 447-2345
www.ttelectronics.com

Standard Tapers

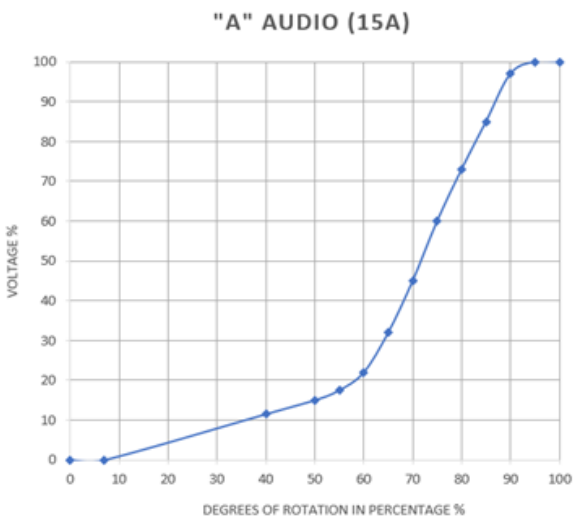

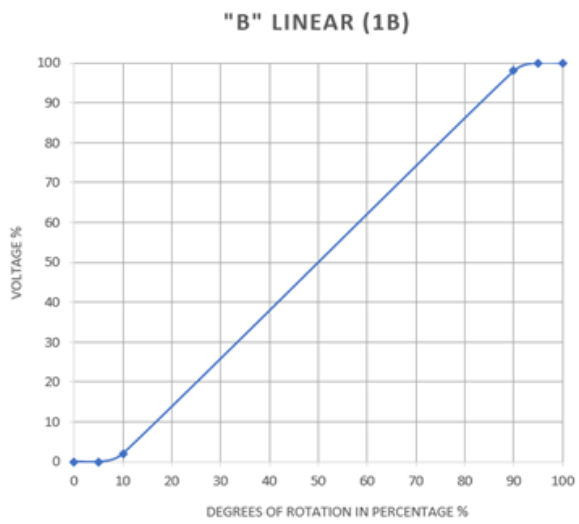

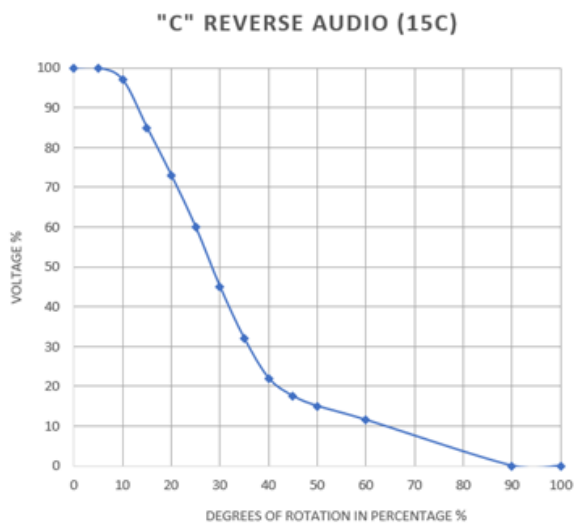

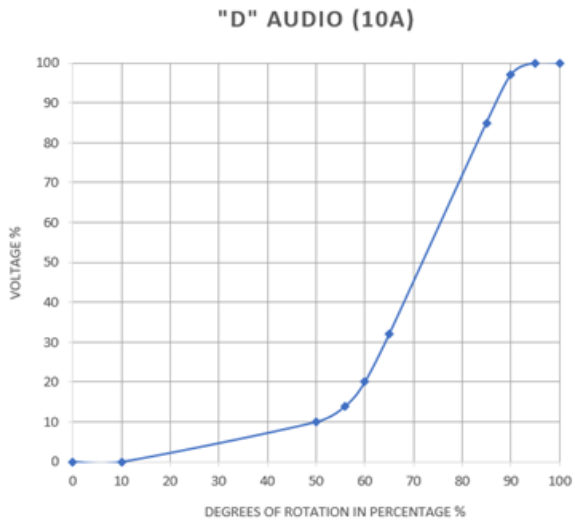

General Note
TT Electronics reserves the right to make changes in product specification without notice or liability. All information is subject to TT Electronics' own data and is considered accurate at time of going to print.

© TT electronics plc

TT Electronics | BI Technologies
413 Rood RD, Suite 7
Calexico, CA 92231
Ph: + 1 (714) 447-2345
www.ttelectronics.com