Reflective Optical Sensor

OPB9001 Series

OBSOLETE

Features:

- Wide operating supply voltage range up to 3.3 V - 30 V
- Ability to drive the output up to 30 V
- Integrated drive circuitry
- Increased ESD up to 8 kV
- EMI immunity capability to EMC Directive 2014/30-EU
- UL & CE approved
- Detecting distance 2.5 mm to 50 mm
- Ambient light rejection 25 klx+
- Programmable output configuration and sensitivity level
- Integrated 4-pin connector for plug and play capability
- -40 °C to +85 °C operating temperature range
- Small footprint dimensions L 18 mm X W 12 mm X H 5 mm

Description:

The OPB9001 PCB module takes the versatile and programmable OPB9000 reflective sensor and enhances its capabilities by integrating multiple features into a robust, small form factor for ease of use. The OPB9001 accepts a wide range of supply voltages from 3.3 V to 30 V and comes with built-in voltage protection for maximum flexibility and protection. An integrated, industry standard 4-pin Molex connector provides ease of connection while the onboard LED indicators provide overall status during power-on, output and calibration.

The OPB9001 is designed for portability in a variety of position and presence detect applications, with a small form factor (188 mm x 12 mm x 5 mm) to fit in even the smallest application spaces.

The full-featured OPB9001AC includes a robust Transient Voltage Suppressor (TVS) diode to protect against harmful voltage spikes and is CE and UL certified for maximum reliability under any environmental condition. It is also capable of withstanding up to 8 kV of contact discharge HBM.

Factory calibrated for a 12 mm distance and a white reflective surface the OPB9001 can be re-calibrated in a matter of milliseconds with a single command for specific application requirements. An interface cable can be purchased separately to calibrate the OPB9001 Series using the OPB9000-KIT.

The product has been assessed to meet high safety, health, and environmental protection requirements as determined by CE and EMC directives, providing for increased ESD and EMI immunity.

Note 1: For additional information on how to program OPB9000, see the datasheet: https://www.ttelectronics.com/TTElectronics/media/ProductFiles/Optoelectronics/Datasheets/OPB9000.pdf

Applications:

- Non-contact position presence applications
- Industrial printing and high-speed paper detection
- Manufacturing and Factory automation
- Automated sewing machines
- Automated banking machines
- Medical equipment
- Automatic dispensing

Additional Features:

- 6ms response time
- Wide operating supply voltage range
  - 4.5 V to 30 V (OPB9001A/AC)
  - 4.5 V to 24 V (OPB9001B)
  - 3.3 V to 5.5 V (OPB9001C)
- Reverse voltage protection
- Single-command calibration with on-chip EPROM
- Temperature-compensated LED drive
- Eliminate the need for external drive circuitry

General Note
TT Electronics reserves the right to make changes in product specification without notice or liability. All information is subject to TT Electronics' own data and is considered accurate at time of going to print.

© TT electronics plc

TT Electronics | OPTEK Technology
2900 E. Plano Pkwy, Plano, TX 75074 | Ph: +1 972 323 2200
www.ttelectronics.com | sensors@ttelectronics.com

OBSOLETE

Electrical Specifications

Part Number Guide – OPB9001

OPB9001 X

OPB9001 Reflective Assembly

VDD Voltage Range
A - 4.5 V to 30 V
B - 4.5 V to 24 V
C - 3.3 V to 5.5 V
AC - 4.5 V to 30 V CE / UL

Ordering Part Number	Voltage Output Configuration	VCC Range	Features
OPB9001AC	N.O. NPN	4.5 V to 30 V	OPB9000 with indicators, voltage regulator + NPN Transistor 30 V +ESD TVS diodes and CE and UL Certifications and connector
OPB9001A	N.O. NPN	4.5 V to 30 V	OPB9000 with indicators, voltage regulator + NPN Transistor 30 V and connector
OPB9001B	N.O. NPN	4.5 V to 24 V	OPB9000 with indicators, voltage regulator + NPN Transistor 24 V and connector
OPB9001C	TTL CMOS	3.3 V to 5.5 V	OPB9000 with indicators and connector
OPB90014CB	N/A	N/A	1m interface cable with connector
OPB9000-KIT	N/A	N/A	OPB9000 reflective sensor evaluation kit for testing and auto-calibration (requires OPB90014CB interface cable)

General Note
TT Electronics reserves the right to make changes in product specification without notice or liability. All information is subject to TT Electronics' own data and is considered accurate at time of going to print.

© TT electronics plc

TT Electronics | OPTEK Technology
2900 E. Plano Pkwy, Plano, TX 75074 | Ph: +1 972 323 2200
www.ttelectronics.com | sensors@ttelectronics.com

Recommended Circuit Application

OBSOLETE

OPB9001A/AC/B

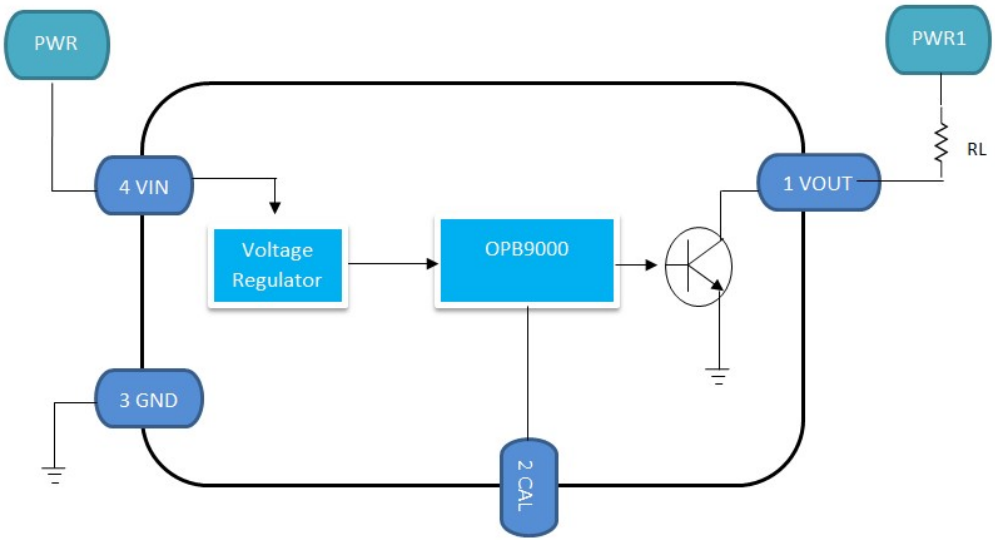

OPB9001C

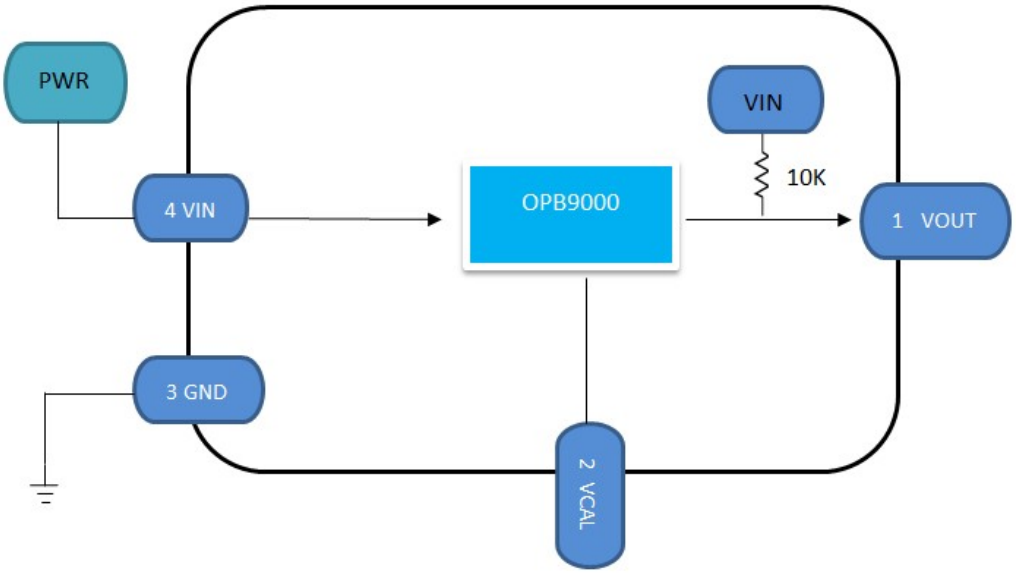

General Note
TT Electronics reserves the right to make changes in product specification without notice or liability. All information is subject to TT Electronics' own data and is considered accurate at time of going to print.

© TT electronics plc

Package Outline—OPB9001XX (For reference)

OBSOLETE

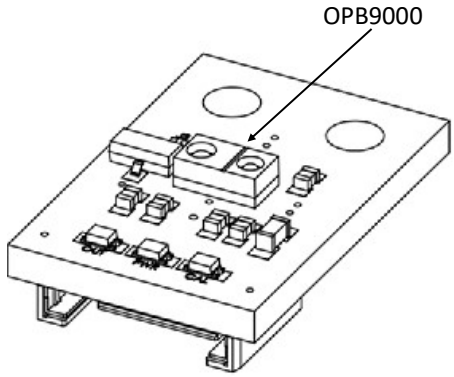

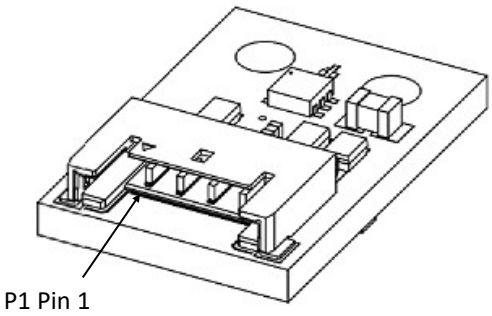

P1—Molex connector P/N 504050-0491
Molex matting connector P/N 5040510401
with terminals 5040520098

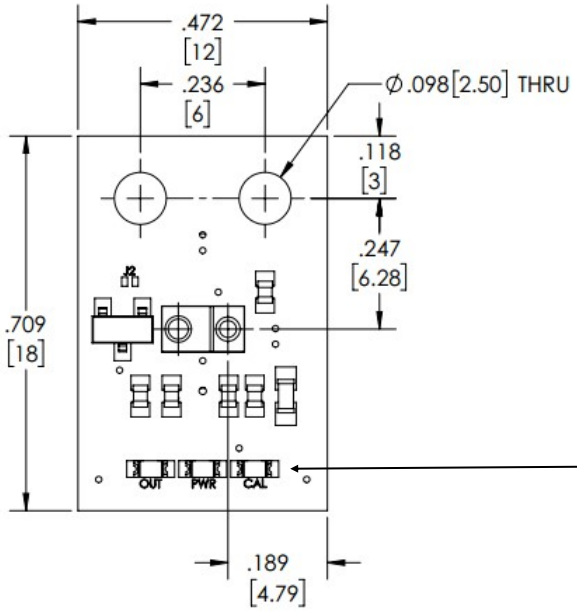

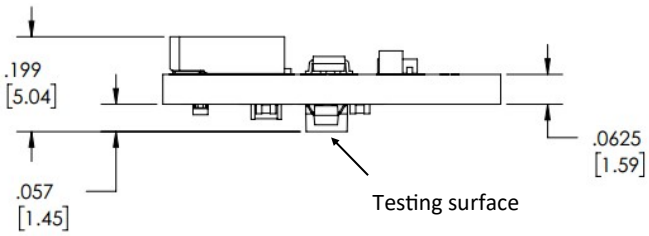

<u>3-Color Indicator</u>
Red: Power on
Orange: Output high
Green: Flashing while calibrating

Pin #	Name	Description
1	VOUT	Logic Output, also used as a digital output to read register bits
2	CAL	Calibrate input/status output (to verify successful calibration)
3	GND	Ground Connection
4	VIN	Positive supply power input

Dimensions are in inches [mm]. Tolerances are: +/- 10% unless otherwise specified

General Note
TT Electronics reserves the right to make changes in product specification without notice or liability. All information is subject to TT Electronics' own data and is considered accurate at time of going to print.

© TT electronics plc

TT Electronics | OPTEK Technology
2900 E. Plano Pkwy, Plano, TX 75074 | Ph: +1 972 323 2200
www.ttelectronics.com | sensors@ttelectronics.com

Electrical Specifications

OBSOLETE

OPB9001XX Absolute Maximum Ratings (T_A = 25° C unless otherwise noted)

Parameter	Symbol	Part Number	Maximum	Units
DC supply voltage	V_{IN}	OPB9001A/AC OPB9001B OPB9001C	32 24 6	V
Storage Temperature Range	T_{STG}	ALL	-40 to +100	°C
Operating Temperature Range	T_{OPR}	ALL	-40 to +85	°C
Ambient/background light	Ix	ALL	25	klx
ESD immunity (human body model)	—	OPB9001AC OPB9001A/B/C	8, contact discharge 2, contact discharge	kV kV
Maximum reverse voltage	V_{RRM}	ALL	30	V
Load current (Collector current)	I_L	OPB9001A/AC	40	mA
Maximum Open collector output voltage	—	OPB9001A/AC	40	V
Current into or out of any pin other than GND	—	OPB9001C	20	mA
Current into or out of GND or Vin	Icc	OPB9001C	150	mA

Note: Permanent damage to the device may occur if operated outside the Absolute maximum specifications. Proper function and reliability of the device at these or any other conditions outside the recommended operating conditions may also be adverselyaffected.

General Note
TT Electronics reserves the right to make changes in product specification without notice or liability. All information is subject to TT Electronics' own data and is considered accurate at time of going to print.

© TT electronics plc

Electrical Specifications

OBSOLETE

Electrical Characteristics (T_A = 25° C unless otherwise noted)

SYMBOL	PARAMETER	MIN	TYP	MAX	UNITS	NOTES
V_{IN}	Supply Voltage OPB9001A/AC OPB9001B OPB9001C	 4.5 4.5 3.3	-	 30 24 5.5	V	
Iss	Current Consumption	-		16	mA	R_L = 10 KΩ
R_L	Pull up resistor (OUT pin) OPB9001A/AC OPB9001B	 1 1		 10 10	 kΩ kΩ	 4.5 V < Vcc < 30 V 4.5 V < Vcc < 24 V
	Sensing Distance Range	2.5		50	mm	
	Output type	NPN open collector				
OUT	Output indicator	Orange LED (ON when output high, OFF when output low)				
PWR	Power indicator	Red LED (ON when Vin min is met)				
CAL	Calibration indicator	Green LED (Flashing while it is being calibrated)				

Electrical Characteristics (T_A = 25° C unless otherwise noted)

SYMBOL	PARAMETER	MIN	TYP	MAX	UNITS	TEST CONDITIONS
VOL	Output voltage (low) OPB9001A/AC OPB9001B OPB9001C	-	-	0.4	V	**Note 1** V_{IN} = 30 or V_{IN} = 4.5 no target V_{IN} = 24 or V_{IN} = 4.5 no target V_{IN} = 5 V , target at d = 6 mm Target = 90 % diffuse white test surface
VOH	Output voltage (high) OPB9001A/AC/B(Note 2) OPB9001C	 0.95*V_{IN} Vin—1	-	V_{IN}	V	 Target at d = 6 mm Target = 90 % diffuse white test surface V_{IN} = 5 V , no target
I_L	Load current OPB9001A/AC/B		V_{IN}/R_L		mA	**Note 2**

Note 1: OPB9000 is in push pull configuration .For additional information refer to the OPB9000 datasheet.
Note 2 : Using a external pull up resistor.

General Note
TT Electronics reserves the right to make changes in product specification without notice or liability. All information is subject to TT Electronics' own data and is considered accurate at time of going to print.

© TT electronics plc

OBSOLETE

Performance

Typical Characteristics (T_A = 25 °C unless noted otherwise)

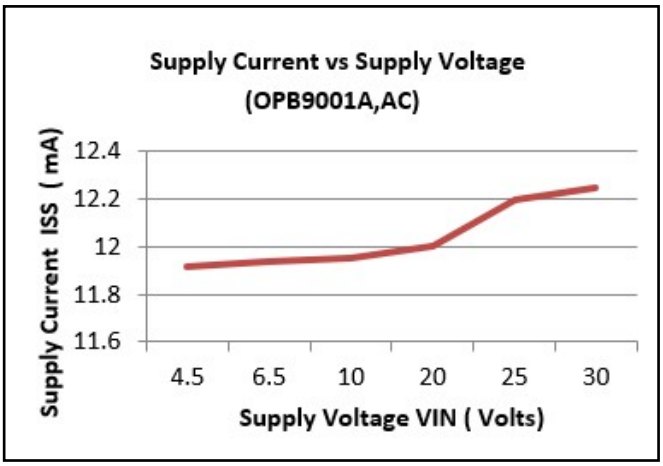

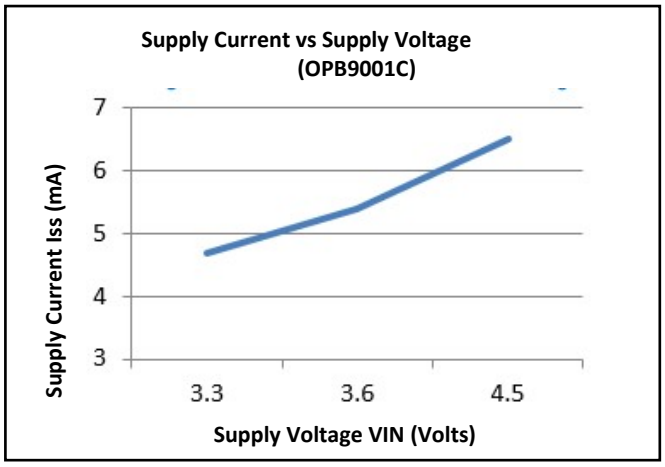

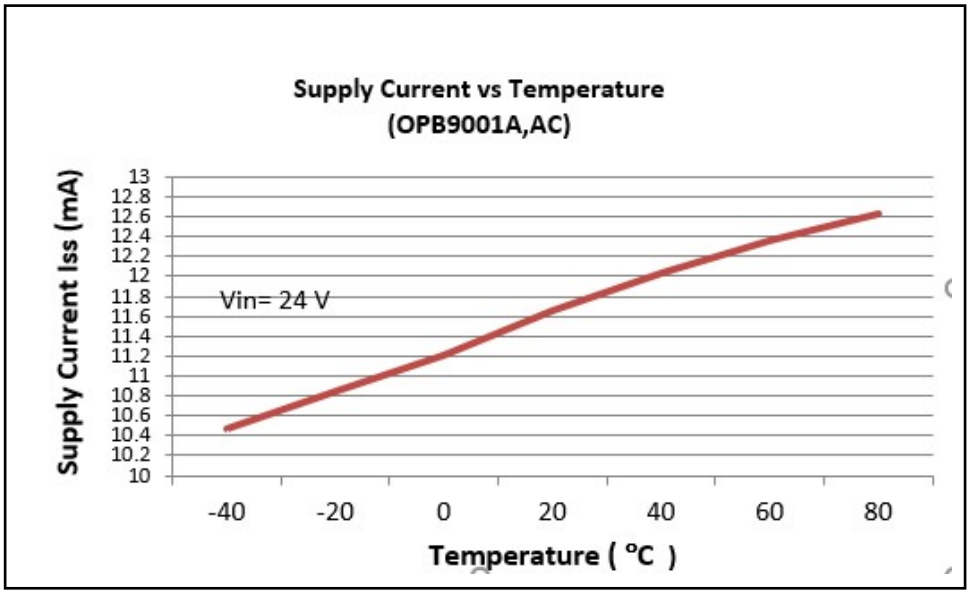

Note: Refer to OPB9000 datasheet for additional performance graphs.
https://www.ttelectronics.com/TTElectronics/media/ProductFiles/Optoelectronics/Datasheets/OPB9000.pdf

General Note
TT Electronics reserves the right to make changes in product specification without notice or liability. All information is subject to TT Electronics' own data and is considered accurate at time of going to print.

© TT electronics plc

Mouser Electronics

Authorized Distributor

Click to View Pricing, Inventory, Delivery & Lifecycle Information:

TT Electronics:

OPB9001AC OPB9001A OPB9001C OPB9001B OPB90014CB