ORION FANS

PRODUCT CATALOG

AC Fans | DC Fans | Fan Trays
Accessories | Blowers

We'll make you a fan.

orionfans.com

Table of Contents

Part Number Configurator Tables 2
AC Fans 6
Harsh Environment Fans 31
Louvered Filter Fan Kits 52
AC Smart Fans 59
Spot Cooling Fans 60
DC Fans 61
Special Function Information 109
Fan Trays - AC 110
Fan Trays - Smart Fan Tray 113
Fan Trays - Thermalcare AC/DC 114
AC Impellers and Blowers 116
DC Blowers 125
Airflow Monitor 131
Fan Guards 132
Fan Filter Assemblies 142
Louvered Fan Guards 144
Fan Cords 148
AC Power Cords 149
Cross Reference 155
OEM Price List 160

Note 1: The drawings and photos featured in this catalog may not reflect the newest frames and designs that are currently available. Design changes and improvements may be made without prior notification.

Note 2: Data tolerance is +/-10%.

Note 3: ORION FANS meet UL/cUL, TUV, VDE and CE Standards. Most ORION FANS are UL/cUL approved and most carry European approvals as well. Models not currently registered with European approval agencies will be submitted (at our discretion) upon customer request.

Note 4: Additional AC and DC voltages not covered in this catalog are available by special order. Ultra High and Ultra Low speeds are also available by special order. (Minimums may apply.)

Note 5: We make additions to our product line frequently. If you cannot find what you are looking for please give us a call at 800-323-2439 or 214-340-0265 or visit our website at www.orionfans.com.

Note 6: Product is warranted against defects in workmanship and materials for 1 year from date of purchase.

Fan Facts...

Life Expectancy

Dual Ball bearing fans will run continuously and reliably for up to 60,000+ hours based on L10 calculations. L10 life for sleeve bearing fans is up to 30,000 hours and sealed sleeve over 50,000 hours. Life will vary depending on the fan size and operating conditions and temperature.

Frames

AC Fans - Diecast aluminum
DC Fans - UL94V-0 glass fiber reinforced plastic is standard for frame sizes 120mm and smaller. Aluminum frames are standard for 127mm and larger. 120mm frames are available in both plastic and aluminum.

Impellers

Glass reinforced thermoplastic - UL94V-0. Optional metal impellers are available for a number of models.

ISO 9001:2008 Certified 951001232-A
UL E170149

ORION FANS is a registered trademark of Knight Electronics

Orion Fans Part Number Configurator Tables - AC Fans

OA 109 AP - 22 - 1 T B - 18

Special Function:
R = Reverse Airflow
18 = Metal Impeller
SF = Salt Fog Rated
03 = Temperature Control
55 or IP55 = IP55 Rated
XC = High Performance
56 = IP56 Rated

Bearing Type: **B** = Ball bearing **S** = Sleeve Bearing

Termination: **T** = Quick connect terminals **W** = 12" wire leads

Speed Version: **1** = High Speed **2** = Medium Speed **3** = Low Speed

Voltage: **11** = 115VAC **12, 115** = 120VAC **22, 23, 230** = 230VAC
11/22 or 1/2 = Dual Voltage (115VAC or 230VAC depending on wire connections)

Frame Type:
AP = Aluminum painted
AN = Aluminum natural finish
SAP = Stackable aluminum painted
APL = Aluminum painted, low profile
ANL = Aluminum natural finish, low profile
SAPL = Stackable aluminum painted, low profile

Model:
(case size in mm)

60 = 60 x 60 x 30
92 = 92 x 92 x 25
109 = 120 x 120 x 38
5920 or **172** (SAP) = 172 x 150 x 51
172 (SAPL) = 172 x 150 x 38
180 = 176 x 176 x 89
200EC = 250 x 76
254 = 254 x 89
280 = 280 x 280 x 80
825 = 80 x 80 x 25
938 = 92 x 92 x 38
4715 = 120 x 120 x 38 (low cost)
162 = 172 x 172 x 55 (metal)
172 = 172 x 172 x 51
180 (ANL/APL) = 180 x 180 x 65
205 = 205 x 72
2543 = 254 x 89 (3 blade)
80 = 80 x 80 x 38
125 = 120 x 120 x 25
119 = 127 x 127 x 38
162-5E = 172 x 172 x 55
172 (SAP/ X C) = 172 x 150 x 55
200 = 200 x 220 x 70
225 = 225 x 225 x 80
2547 = 254 x 89 (7 blade)

Base Model
OA = AC fan

Special function codes may not appear on the fan label unless specified by the customer

Orion Fans Part Number Configurator Tables - DC Fans

OD 12 38 AP - 12 H T B - 01

Special Function:

01=Tachometer Output 5VTTL*	**02**=Alarm Output 5VTTL*	**03**=Thermistor Speed Control (hub)
04=Thermistor Speed Control (wire)	**05**=PWM Input	**06**=Dual Speed
07=Temperature Sensor	**08**=Tachometer*+Alarm*	**09**=Tachometer*+Thermistor
10=Tachometer*+PWM	**11**=Tachometer*+Temperature Sensor	**12**=Alarm*+Thermistor
13=Alarm*+PWM	**14**=Alarm*+Temperature Sensor	**15**=Tachometer*+Alarm*+PWM
16=Tachometer*+Alarm*+Thermistor	**17**=Extra Long Lead Wires	**18**=Metal Impeller
19=High Temperature	**20**=Conformal Coating	**21**=Customized
55 or IP55=IP55 Rated	**SF**=Salt Fog Rated	

* To specify "open collector" instead of 5VTTL, add the letter "a" after the special functions code

High Static Pressure: **XC**=High Performance **VXC**=Vane Axial **XC,XE,XJ**=Super High Performance

Bearing Type: **B** = Ball bearing **S** = Sleeve Bearing **SS** = Sealed Sleeve Bearing

Termination: **T** = Quick connect terminals **{blank}** = 12" wire leads

Speed Version: **HH**=Extra High Speed **H**=High Speed **M**=Medium Speed **L**=Low Speed **LL**=Extra Low Speed

Voltage: **05** = 5VDC **12** = 12VDC **24** = 24VDC **48** = 48VDC **60** = 60VDC Other voltages available

Frame Type: **{blank}** = Thermoplastic Construction
SAPL = Stackable Diecast Aluminum Black, Low Profile
SAP = Stackable Diecast Aluminum Black
SPOT / DIN = Spot Cooling w/ AC Adapter & DIN mounting package
AP = Diecast Aluminum Black
APL = Diecast Aluminum Black, Low Profile
SPOT = Spot Cooling w/ AC Adapter

Thickness: **06** = 6mm **10** = 10mm **15** = 15mm **20** = 20mm **25** = 25mm **28** = 28mm **32** = 32mm **35** = 35mm **38** = 38mm **45** = 45mm **56** = 56mm

Frame Size (in mm): **25** = 25 x 25 **30** = 30 x 30 **40** = 40 x 40 **50** = 50 x 50 **52** = 52 x 52 **60** = 60 x 60 **70** = 70 x 70 **80** = 80 x 80 **92** = 92 x 92 **12** = 120 x 120 **127** = 127 x 38 **172(SAPL)** = 172 x 38 **172** = 172 x 150 **180** = 180 x 65 **254** = 254 x 89 **280** = 280 x 89

Thickness dimensions are not included in part numbers for these frame sizes: 127, 172, 180, 254, 280

Base Model: **OD** = DC fan

Additional suffixes consisting of both numbers and letters may be applied for multiple fan modifications

Special function codes may not appear on the fan label unless specified by the customer

Orion Fans Part Number Configurator Tables - AC Blowers & Motorized Impellers

OAB 800 AN - 22 - 3 B

Bearing Type: **B** or **Blank** = Dual Ball Bearing Sealed

Speed Options:
1 = High Speed
2 = Medium Speed
3 = Low Speed
1/2 = Dual Speed

Voltage:
11 = 115 or 120VAC
22 = 220 or 230VAC

Frame Type:
AN = Aluminum natural finish
Blank = Diecast Aluminum

Model:
(size in mm)
800 = 125 x 126 x 39
908 = 183 x 190 x 70
190 = 190 x 70
220 = 220 x 71
22599 = 225 x 99
400 = 404 x 162

Base Model:
OAB = AC Blower
OAB = AC Motorized Impeller

Other models and frame sizes available
All AC motorized impellers ship with required capacitor

Orion Fans Part Number Configurator Tables - DC Blowers

ODB 1232 __ - 24 HH B

Bearing Type: **B** = Dual Ball Bearing Sealed

Speed Options:
HH = Extra High Speed
H = High Speed
M = Medium Speed
L = Low Speed

Voltage:
5 = 5VDC
12 = 12VDC
24 = 24VDC
48 = 48VDC

Frame Type: **PT** or **Blank** = Thermoplastic **AN** = Aluminum natural finish

Model: (size in mm)
182 = 182 x 171 x 82
600 = 120 x 31
1232 = 120 x 32
5009 = 50 x 50 x 09
5115 = 51 x 15
6015 = 60 x 15
7530 = 75 x 30
9733 = 96 x 33

Base Model: **ODB** = DC Blower

Other models and frame sizes available

OA60 Series

AC Fan - 115V, 230V
60 x 30mm (2.36" x 1.18")

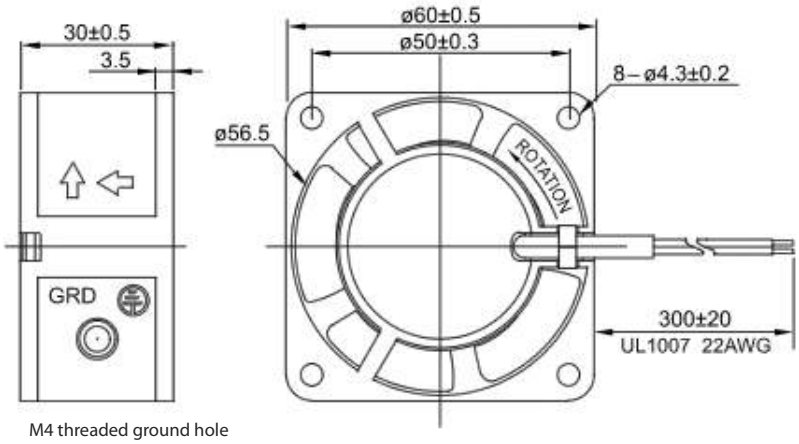

Frame	Diecast Aluminum
Impeller	PBT, UL94V-0 plastic
Connection	2x Lead Wires 22 AWG
Motor	Shaded pole, impedance protected
Bearing System	Dual ball
Insulation Resistance	>100M ohm between lead-wire and frame (500VDC)
Dielectric Strength	1 min at 1,500 VAC, 50/60Hz

Operating Temperature
Ball Bearing
-20C ~ +80C
Storage Temp
-40C ~ +80C

Life Expectancy
Ball Bearing
60,000 hours (L10 at 40C)

Weight: ~ 0.31 lbs

m2

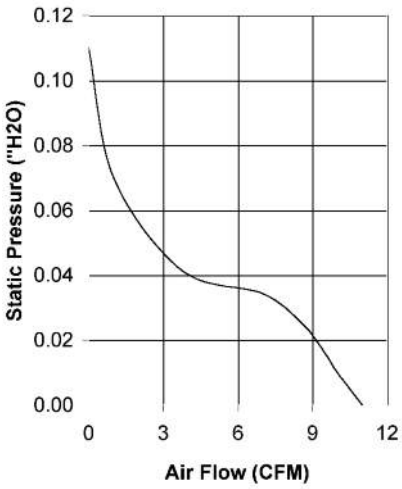

Part Number	OA60AP-11-1WB	OA60AP-22-1WB
Nominal Voltage	115VAC	230VAC
Voltage Range	80 ~ 130VAC	160 ~ 260VAC
Rated Power	4 W	4 W
Rated Speed (RPM)	3,100	3,100
Airflow (CFM)	11	11
Noise Level (dB)	28	28
Max. Static Pressure	0.11" H_2O	0.11" H_2O

OA825 Series

AC Fan - 115V, 230V
80 x 25mm (3.15" x 1.0")

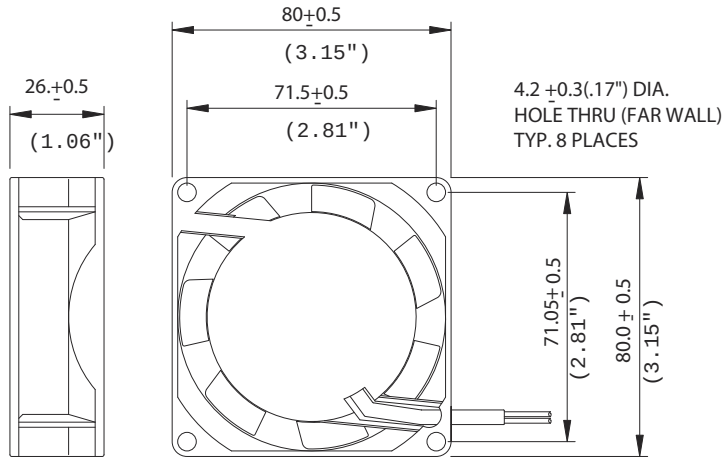

Frame	Diecast Aluminum
Impeller	PBT, UL94V-0 plastic
Connection	2x Lead Wires 22 AWG or terminals
Motor	Shaded pole, impedance protected
Bearing System	Dual ball or Sleeve
Insulation Resistance	>100M ohm between lead-wire and frame (500VDC)
Dielectric Strength	1 min at 1,500 VAC, 50/60Hz

Operating Temperature
Ball Bearing
-20C ~ +80C
Sleeve Bearing
-10C ~ +50C
Storage Temp
-40C ~ +80C

Life Expectancy
Ball Bearing
60,000 hours (L10 at 40C)
Sleeve Bearing
30,000 hours (L10 at 40C)

Weight: ~ 0.57 lbs.

m0

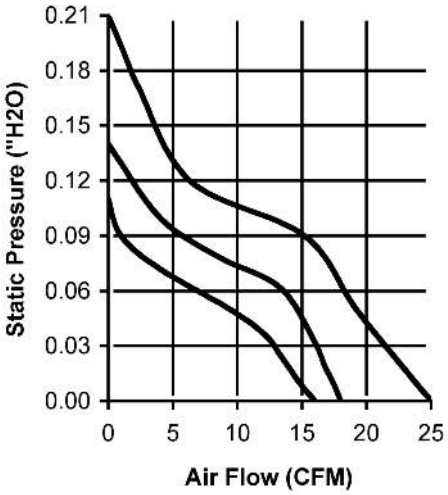

Model Number	Speed (RPM)	Airflow (CFM)	Noise (dB)	Volts AC	Voltage Range	Watts	Max. Static Pressure ("H_2O)
OA825AP-11-1 *	3,000	25	28	115	80~130	9	.21
OA825AP-11-2 *	2,300	18	24	115	80~130	6	.14
OA825AP-11-3 *	1,900	16	19	115	80~130	4	.11
OA825AP-22-1 *	3,000	25	28	230	160~260	9	.21
OA825AP-22-2 *	2,300	18	24	230	160~260	6	.14
OA825AP-22-3 *	1,900	16	19	230	160~260	4	.11

** Indicate "TB" (Terminal Ball Bearing), "WB" (12" Wire Leads, Ball Bearing), "TS" (Terminal, Sleeve Bearing), "WS" (12" Wire Leads, Sleeve Bearing)*

Knight Electronics, Inc.
10557 Metric Drive
Dallas, Texas 75243
214-340-0265

RoHS Compliant

Orion Fans
Information and data is subject to change without prior notification.

OA80 Series

AC Fan - 115V, 230V
80 x 38mm (3.15" x 1.5")

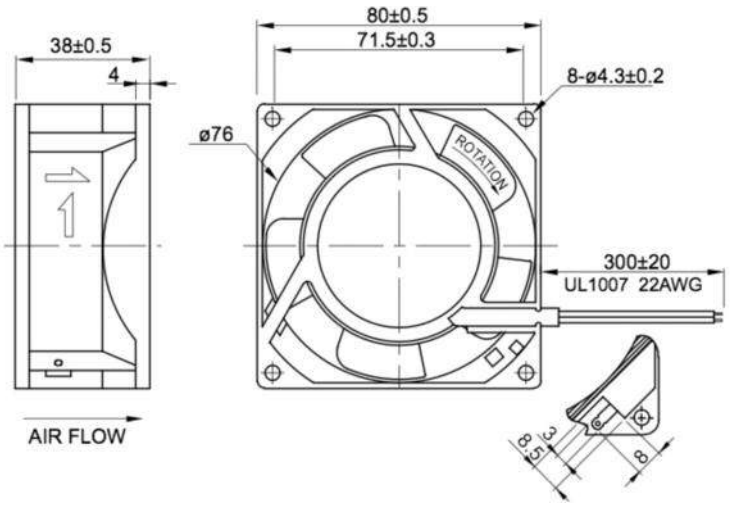

Frame	Diecast Aluminum
Impeller	PBT, UL94V-0 plastic
Connection	2x Lead Wires 22 AWG or terminals
Motor	Shaded pole, impedance protected
Bearing System	Dual ball or Sleeve
Insulation Resistance	>100M ohm between lead-wire and frame (500VDC)
Dielectric Strength	1 min at 1,500 VAC, 50/60Hz

Operating Temperature
Ball Bearing
-20C ~ +80C
Sleeve Bearing
-10C ~ +50C
Storage Temp
-40C ~ +80C

Life Expectancy
Ball Bearing
60,000 hours (L10 at 40C)
Sleeve Bearing
30,000 hours (L10 at 40C)

Weight: ~ 0.62 lbs

m2

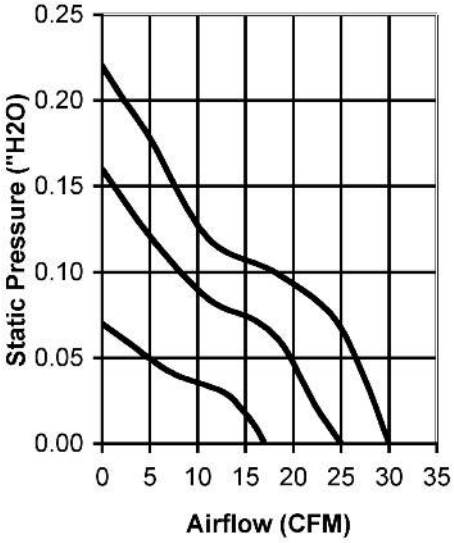

Model Number	Speed (RPM)	Airflow (CFM)	Noise (dB)	Volts AC	Voltage Range	Watts	Max. Static Pressure ("H_2O)
OA80AP-11-1 *	3,000	30	36	115	103~126	9	0.22
OA80AP-11-2 *	2,300	25	32	115	103~126	9	0.16
OA80AP-11-3 *	1,950	17	28	115	103~126	9	0.07
OA80AP-22-1 *	3,000	30	36	230	160~253	12	0.22
OA80AP-22-2 *	2,300	25	32	230	160~253	12	0.16
OA80AP-22-3 *	1,950	17	28	230	160~253	12	0.07

** Indicate "TB" (Terminal Ball Bearing), "WB" (12" Wire Leads, Ball Bearing), "TS" (Terminal, Sleeve Bearing), "WS" (12" Wire Leads, Sleeve Bearing)*

OA92 Series

AC Fan - 115V, 230V
92 x 25mm (3.62" x 1.0")

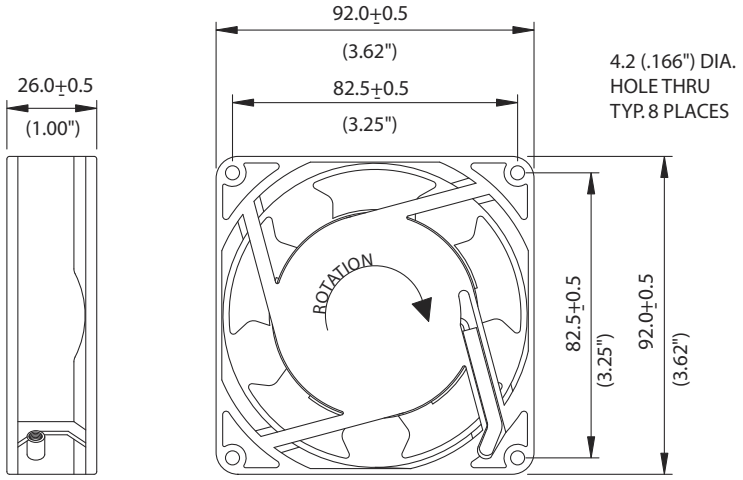

Frame	Diecast Aluminum
Impeller	PBT, UL94V-0 plastic
Connection	2x Lead Wires 22 AWG (~300mm) or terminals
Motor	Shaded pole, impedance protected
Bearing System	Dual ball or Sleeve
Insulation Resistance	>100M ohm between lead-wire and frame (500VDC)
Dielectric Strength	1 min at 1,500 VAC, 50/60Hz

Operating Temperature
Ball Bearing
-20C ~ +80C
Sleeve Bearing
-10C ~ +50C
Storage Temp
-40C ~ +80C

Life Expectancy
Ball Bearing
60,000 hours (L10 at 40C)
Sleeve Bearing
30,000 hours (L10 at 40C)

Weight: ~ 0.64 lbs.

m0

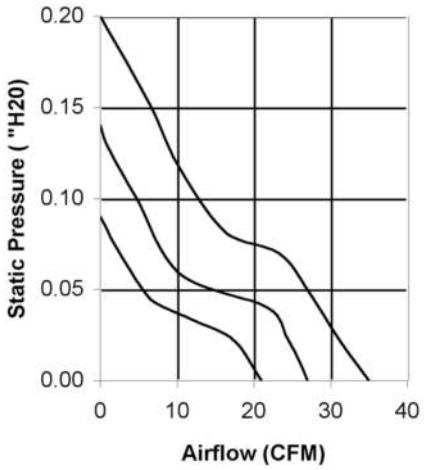

Model Number	Speed (RPM)	Airflow (CFM)	Noise (dB)	Volts AC	Voltage Range	Watts	Max. Static Pressure ("H_2O)
OA92AP-11-1 *	3,000	35	30	115	80~130	13	.20
OA92AP-11-2 *	2,300	27	22	115	80~130	10	.14
OA92AP-11-3 *	1,900	22	19	115	80~130	6	.09
OA92AP-22-1 *	3,000	35	30	230	160~260	13	.20
OA92AP-22-2 *	2,300	27	22	230	160~260	10	.14
OA92AP-22-3 *	1,900	22	19	230	160~260	6	.09

** Indicate "TB" (Terminal Ball Bearing), "WB" (12" Wire Leads, Ball Bearing), "TS" (Terminal, Sleeve Bearing), "WS" (12" Wire Leads, Sleeve Bearing)*

Knight Electronics, Inc.
10557 Metric Drive
Dallas, Texas 75243
214-340-0265

RoHS Compliant

Orion Fans
Information and data is subject to change without prior notification.

OA938 Series

AC Fan - 115V, 230V
92 x 38mm(3.62" x 1.5")

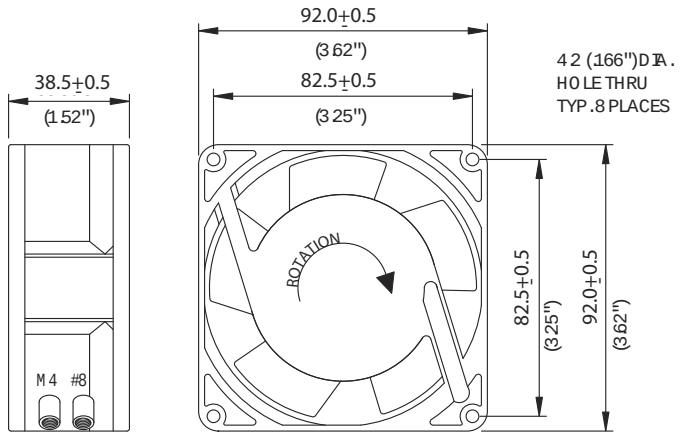

Frame	Diecast Aluminum
Impeller	PBT, UL94V-0 plastic
Connection	2x Lead Wires 22 AWG or terminals
Motor	Shaded pole, impedance protected
Bearing System	Dual ball or Sleeve
Insulation Resistance	>100M ohm between lead-wire and frame (500VDC)
Dielectric Strength	1 min at 1,500 VAC, 50/60Hz

Operating Temperature
Ball Bearing
-20C ~ +80C
Sleeve Bearing
-10C ~ +50C
Storage Temp
-40C ~ +80C

Life Expectancy
Ball Bearing
60,000 hours (L10 at 40C)
Sleeve Bearing
30,000 hours (L10 at 40C)

Weight: ~ 0.98 lbs.

m0

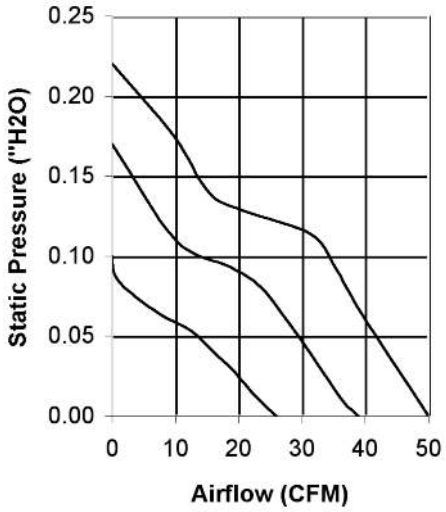

Model Number	Speed (RPM)	Airflow (CFM)	Noise (dB)	Volts AC	Voltage Range	Watts	Max. Static Pressure ("H_2O)
OA938AP-11-1 *	3,100	50	32	115	80~130	9	.22
OA938AP-11-2 *	2,400	39	23	115	80~130	5	.17
OA938AP-11-3 *	1,800	26	19	115	80~130	3	.10
OA938AP-22-1 *	3,100	50	32	230	160~260	9	.22
OA938AP-22-2 *	2,400	39	23	230	160~260	5	.17
OA938AP-22-3 *	1,800	26	19	230	160~260	3	.10

** Indicate "TB" (Terminal Ball Bearing), "WB" (12" Wire Leads, Ball Bearing), "TS" (Terminal, Sleeve Bearing), "WS" (12" Wire Leads, Sleeve Bearing)*

OA125 Series

AC Fan - 115V, 230V
120 x 25mm (4.7" x 1.0")

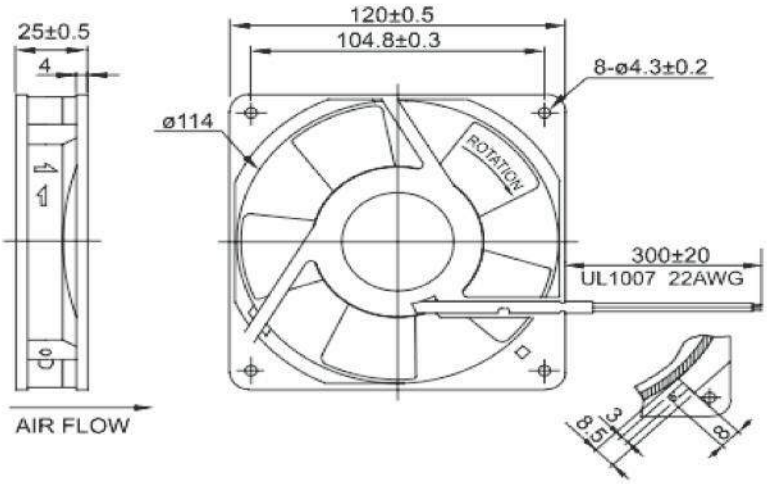

Frame	Diecast Aluminum
Impeller	PBT, UL94V-0 plastic
Connection	2x Lead Wires 22 AWG or terminals
Motor	Shaded pole, impedance protected
Bearing System	Dual ball or Sleeve
Insulation Resistance	>100M ohm between lead-wire and frame (500VDC)
Dielectric Strength	1 minute at 1,500 VAC, 50/60Hz

Operating Temperature
Ball Bearing
-20C ~ +80C
Sleeve Bearing
-10C ~ +50C
Storage Temp
-40C ~ +80C

Life Expectancy
Ball Bearing
60,000 hours (L10 at 40C)
Sleeve Bearing
30,000 hours (L10 at 40C)

Weight: ~ 0.73 lbs.

m2

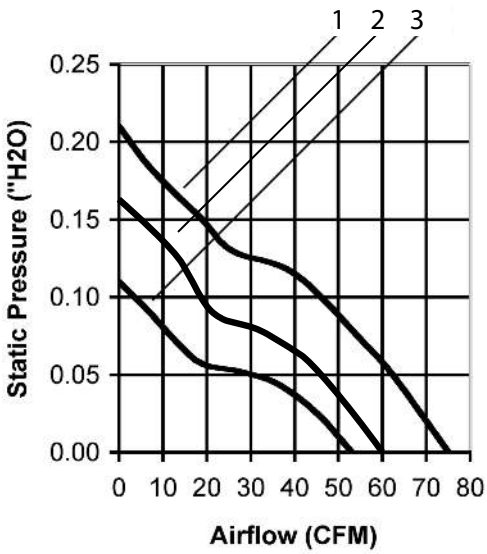

Model Number	Speed (RPM)	Airflow (CFM)	Noise (dB)	Volts AC	Voltage Range AC	Watts	Max. Static Pressure ("H_2O)
OA125AP-11-1 *	2,900	75	42	115	80 ~ 130	11	0.21
OA125AP-11-2 *	2,500	60	37	115	80 ~ 130	11	0.16
OA125AP-11-3 *	2,000	53	33	115	80 ~ 130	11	0.11
OA125AP-22-1 *	2,900	75	42	230	160 ~ 260	14	0.21
OA125AP-22-2 *	2,500	60	37	230	160 ~ 260	14	0.16
OA125AP-22-3 *	2,000	53	33	230	160 ~ 260	14	0.11

* *Indicate "TB" (Terminal Ball Bearing) "WB" (12" Wire Leads, Ball Bearing), "TS" (Terminal, Sleeve Bearing), "WS" (Wire Leads, Sleeve Bearing)*

Knight Electronics, Inc.
10557 Metric Drive
Dallas, Texas 75243
214-340-0265

RoHS Compliant

Orion Fans
Information and data is subject to change without prior notification.

OA109 Series

AC Fan - 115V, 230V
120x38mm (4.7"x 1.5")

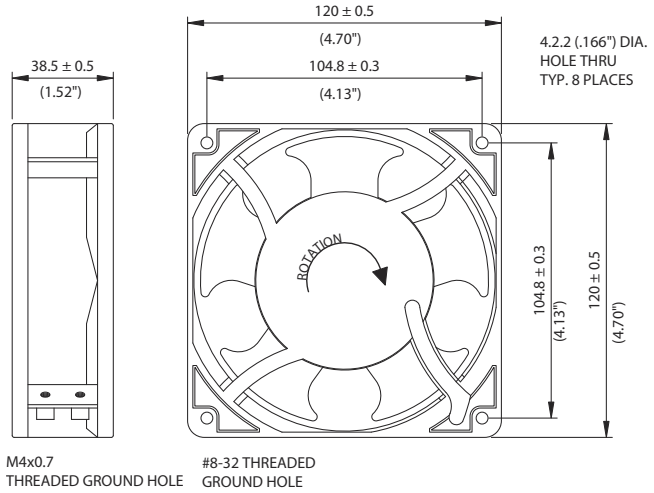

Frame	Diecast Aluminum
Impeller	PBT, UL94V-0 plastic
Connection	2x 300mm Lead wires (22AWG) or terminals
Motor	AC shaded pole, impedance protected
Bearing System	Dual ball or Sleeve
Insulation Resistance	>100M ohm between lead-wire and frame (500VDC)
Dielectric Strength	1 min at 1,500 VAC, 50/60Hz

Operating Temperature
Ball Bearing
-20C ~ +80C
Sleeve Bearing
-10C ~ +50C
Storage Temp
-40C ~ +100C

Life Expectancy
Ball Bearing
60,000 hours (L10 at 40C)
Sleeve Bearing
30,000 hours (L10 at 40C)

Weight: ~ 1.12 lbs.

m0

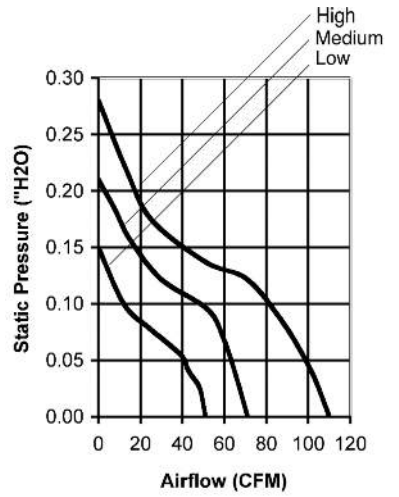

Model Number	Speed (RPM)	Airflow (CFM)	Noise (dB)	Volts AC	Voltage Range	Watts	Max. Static Pressure ("H_2O)
OA109AP-11-1 *	3,000	110	42	115	80~130	15	.28
OA109AP-11-2 *	2,300	71	35	115	80~130	11	.24
OA109AP-11-3 *	1,600	51	25	115	80~130	8	.15
OA109AP-22-1 *	3,000	110	42	230	160~260	15	.28
OA109AP-22-2 *	2,300	71	35	230	160~260	11	.24
OA109AP-22-3 *	1,600	51	25	230	160~260	8	.15

** Indicate "TB" (Terminal Ball Bearing), "WB" (12" Wire Leads, Ball Bearing), "TS" (Terminal, Sleeve Bearing), "WS" (12" Wire Leads, Sleeve Bearing)*

Knight Electronics, Inc.
10557 Metric Drive
Dallas, Texas 75243
214-340-0265

RoHS Compliant

Orion Fans
Information and data is subject to change without prior notification.

OA109 'XC Series'

AC Fan - 115V, 230V
120 x 38mm (4.7" x 1.5")

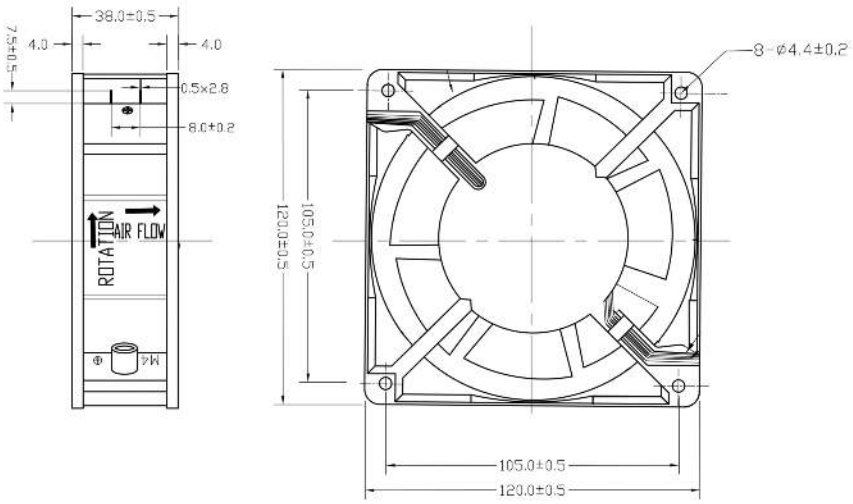

Frame	Diecast Aluminum
Impeller	PBT, UL94V-0 plastic
Connection	2x Lead wires (24AWG*) or Terminals
Motor	AC capacitor drive, thermally protected
Bearing System	Dual ball
Insulation Resistance	>100M ohm between lead-wire and frame (500VDC)
Dielectric Strength	1 min at 1,500 VAC, 50/60Hz

Operating Temperature
Ball Bearing
-10C ~ +65C
Storage Temp
-20C ~ +80C

Life Expectancy
Ball Bearing
60,000 hours (L10 at 40C)

(* Wires ~300mm)

Weight: ~1.12 lbs.

m4

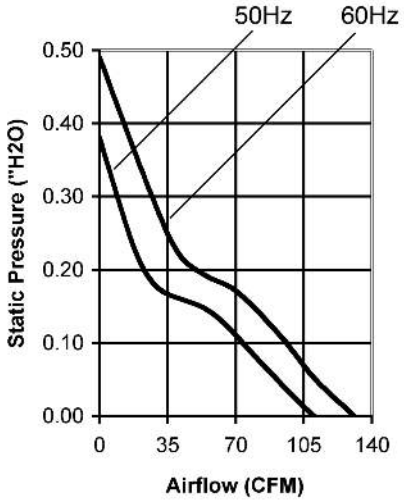

Part Number	OA109AP-11-1 * B XC	OA109AP-22-1 * B XC
Nominal Voltage	115 VAC	230 VAC
Rated Power (50/60 Hz)	21 / 22 W	21 / 22 W
Nominal Current	0.17 / 0.18 A	0.10 / 0.11 A
Frequency (Hz)	50 / 60	50 / 60
Rated Speed (RPM)	2,800 / 3,300	2,800 / 3,300
Airflow (CFM)	110 / 131	110 / 131
Noise Level (dB)	43 / 47	43 / 47
Max. Static Pressure	0.38" / 0.49" H_2O	0.38" / 0.49" H_2O

* Insert "T" to specify Terminal or "W" to specify Wire leads

Knight Electronics, Inc.
10557 Metric Drive
Dallas, Texas 75243
214-340-0265

RoHS Compliant

Orion Fans
Information and data is subject to change without prior notification.

OA4715 'Challenger Series'

AC Fan - 115V, 230V
120 x 38mm (4.7" x 1.5")

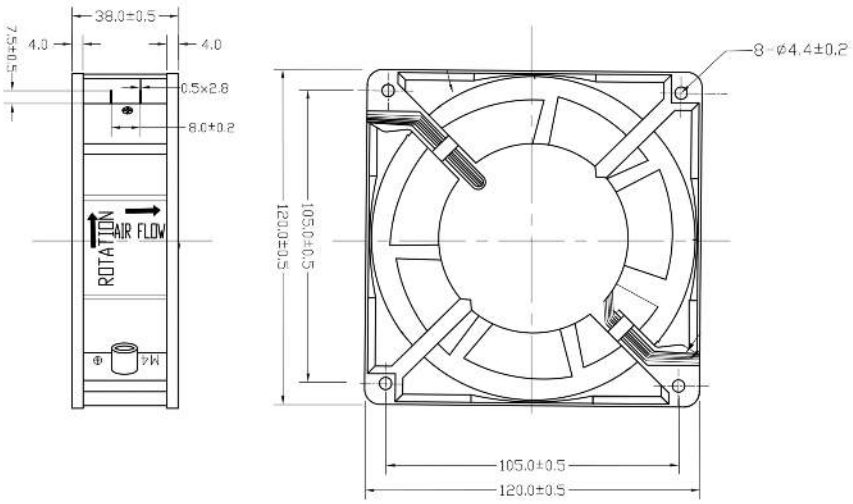

Frame	Diecast Aluminum
Impeller	PBT, UL94V-0 plastic
Connection	Terminals
Motor	AC shaded pole, impedance protected
Bearing System	Dual ball
Insulation Resistance	>100M ohm between lead-wire and frame (500VDC)
Dielectric Strength	1 min at 1,500 VAC, 50/60Hz

Operating Temperature
Ball Bearing
-10C ~ +70C
Storage Temp
-20C ~ +80C

Life Expectancy
Ball Bearing
60,000 hours (L10 at 40C)

Weight: ~1.2 lbs.

m4

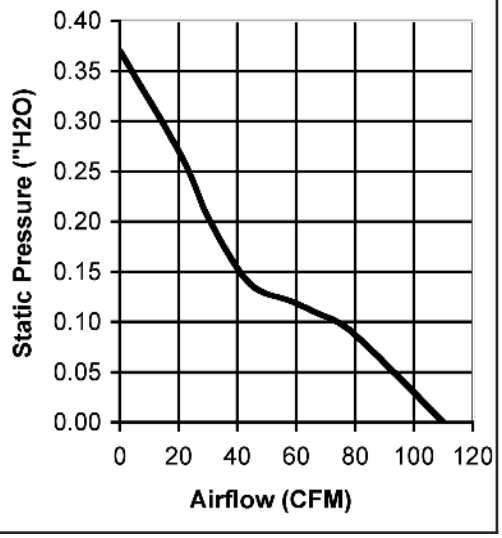

Part Number	OA4715-12TB	OA4715-23TB
Nominal Voltage	115 VAC	230 VAC
Nominal Current	0.30 A	0.23 A
Rated Power	24 W (60Hz)	24 W (60Hz)
Rated Speed (RPM)	3,000	3,000
Airflow (CFM)	110	110
Noise Level (dB)	44	44
Max. Static Pressure	0.37" H_2O	0.37" H_2O

OA109 (AIOS)

AC Fan - 115V, 230V, Reverse Airflow
120 x 38mm (4.7" x 1.5")

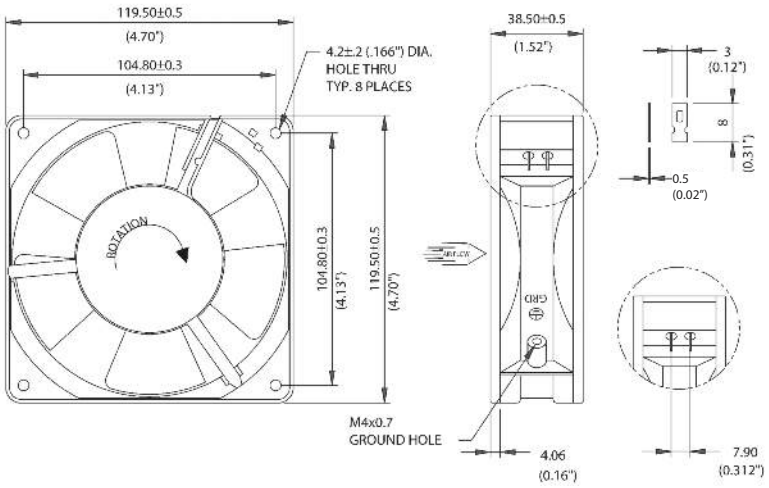

Frame	Diecast Aluminum
Impeller	PBT, UL94V-0 plastic
Connection	2x 300mm Lead wires (22AWG) or terminals
Motor	AC shaded pole, impedance protected
Bearing System	Dual ball or Sleeve
Insulation Resistance	>100M ohm between lead-wire and frame (500VDC)
Dielectric Strength	1 min at 1,500 VAC, 50/60Hz

Operating Temperature
Ball Bearing
-20C ~ +80C
Sleeve Bearing
-10C ~ +50C
Storage Temp
-40C ~ +80C

Life Expectancy
Ball Bearing
60,000 hours (L10 at 40C)
Sleeve Bearing
30,000 hours (L10 at 40C)

AIOS
Air Input Over Struts

Weight: ~1.2 lbs.

m2

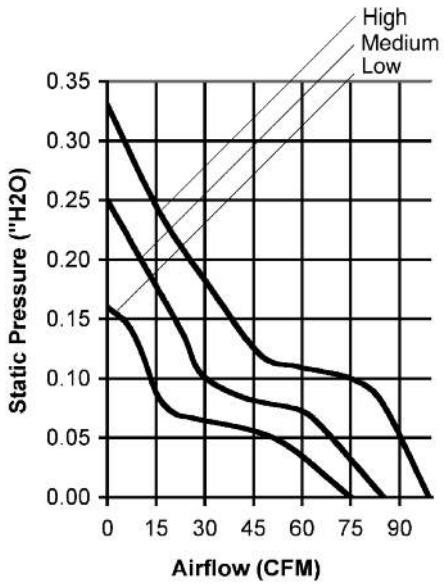

Model Number	Speed (RPM)	Airflow (CFM)	Noise (dB)	Volts AC	Voltage Range	Watts	Max. Static Pressure ("H_2O)
OA109AP-11-1 * R	3,100	99	47	115	80~130	15	.33
OA109AP-11-2 * R	2,750	85	45	115	80~130	13	.25
OA109AP-11-3 * R	2,300	75	38	115	80~130	12	.16
OA109AP-22-1 * R	3,100	99	47	230	160~260	15	.33
OA109AP-22-2 * R	2,750	85	45	230	160~260	13	.25
OA109AP-22-3 * R	2,300	75	38	230	160~260	12	.16

** Indicate "TB" (Terminal Ball Bearing), "WB" (12" Wire Leads, Ball Bearing), "TS" (Terminal, Sleeve Bearing), "WS" (12" Wire Leads, Sleeve Bearing)*

Knight Electronics, Inc.
10557 Metric Drive
Dallas, Texas 75243
214-340-0265

RoHS Compliant

Orion Fans
Information and data is subject to change without prior notification.

OA119 Series

AC Fan - 115V, 230V
127 x 38mm (5.0" x 1.5")

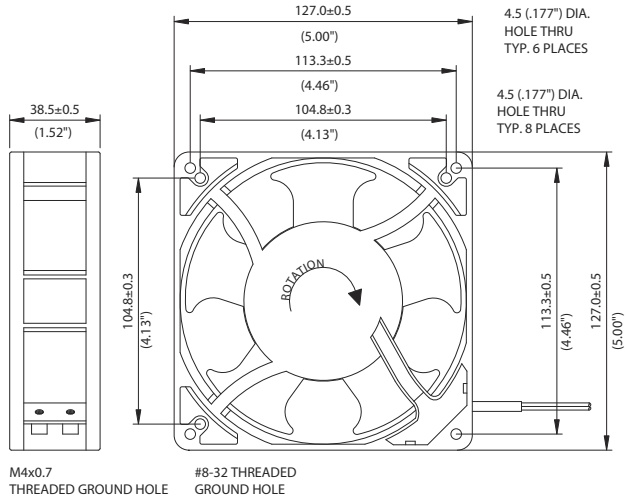

Frame	Diecast Aluminum
Impeller	PBT, UL94V-0 plastic
Connection	2x Lead Wires 22 AWG or terminals
Motor	Shaded pole, impedance protected Tachometer available (5VTTL), input 5 ~24V
Bearing System	Dual ball or Sleeve
Insulation Resistance	>100M ohm between lead-wire and frame (500VDC)
Dielectric Strength	1 min at 1,500 VAC, 50/60Hz

Operating Temperature
Ball Bearing
-20C ~ +80C
Sleeve Bearing
-10C ~ +50C
Storage Temp
-40C ~ +80C

Life Expectancy
Ball Bearing
60,000 hours (L10 at 40C)
Sleeve Bearing
30,000 hours (L10 at 40C)

Weight: ~ 1.3 lbs.

m0

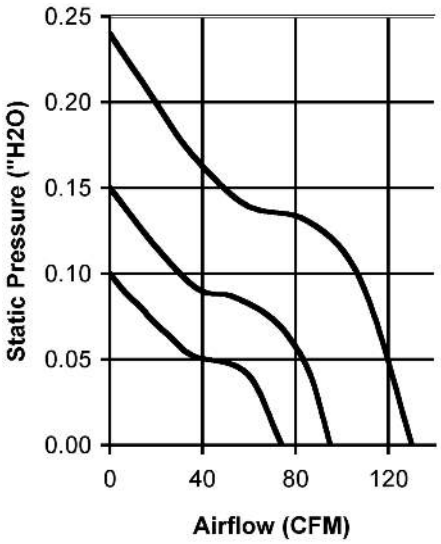

Model Number	Speed (RPM)	Airflow (CFM)	Noise (dB)	Volts AC	Voltage Range	Watts	Max. Static Pressure ("H_2O)
OA119AP-11-1 *	2,750	130	46	115	80~130	14	.24
OA119AP-11-2 *	2,300	95	37	115	80~130	10	.15
OA119AP-11-3 *	1,400	74	28	115	80~130	7	.10
OA119AP-22-1 *	2,750	130	46	230	160~260	14	.24
OA119AP-22-2 *	2,300	95	37	230	160~260	10	.15
OA119AP-22-3 *	1,400	74	28	230	160~260	7	.10

** Indicate "TB" (Terminal Ball Bearing), "WB" (12" Wire Leads, Ball Bearing), "TS" (Terminal, Sleeve Bearing), "WS" (12" Wire Leads, Sleeve Bearing)*

Knight Electronics, Inc.
10557 Metric Drive
Dallas, Texas 75243
214-340-0265

RoHS Compliant

Orion Fans
Information and data is subject to change without prior notification.

OA172SAPL Series

AC Fan - 115V, 230V
172 x 150 x 38mm (6.7”x 5.9”x 1.5”)

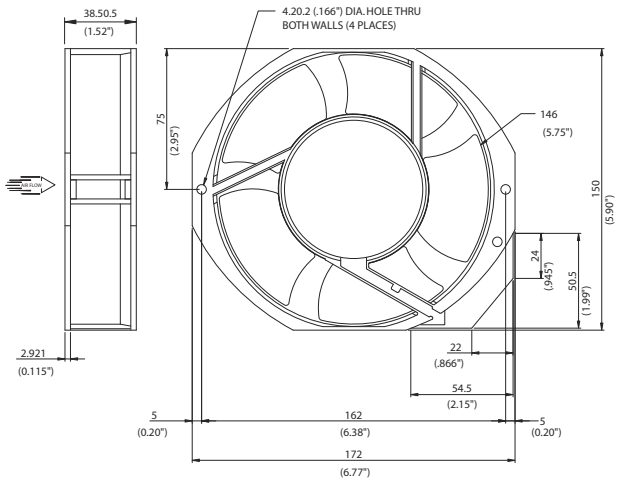

Frame	Diecast Aluminum
Impeller	PBT, UL94V-0 plastic
Connection	2x Lead Wires or Terminals
Motor	Capacitor drive, thermally protected
Bearing System	Dual ball
Insulation Resistance	>100M ohm between lead-wire and frame (500VDC)
Dielectric Strength	1 min at 1,500 VAC, 50/60Hz

Operating Temperature
Ball Bearing
-20C ~ +80C
Storage Temp
-40C ~ +80C

Life Expectancy
Ball Bearing
60,000 hours (L10 at 40C)

Weight: ~ 1.6 lbs.

m2

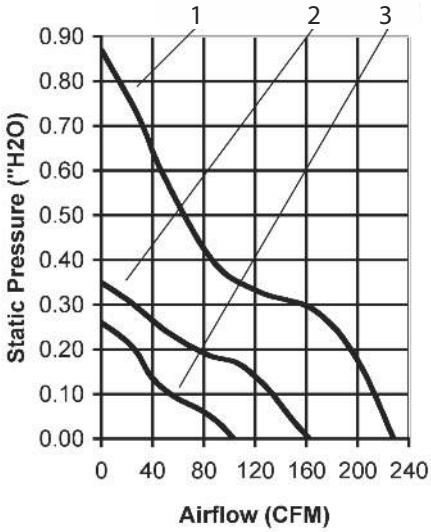

Model Number	Speed (RPM)	Airflow (CFM)	Noise (dB)	Volts AC	Voltage Range	Watts	Max. Static Pressure (“H_2O)
OA172SAPL-11-1 *	3,400	228	58	115	103~126	28	0.87
OA172SAPL-11-2 *	2,750	162	50	115	103~126	27	0.35
OA172SAPL-11-3 *	1,700	103	44	115	103~126	26	0.26
OA172SAPL-22-1 *	3,400	228	58	230	160~260	28	0.87
OA172SAPL-22-3 *	1,700	103	44	230	160~260	26	0.26

* Indicate “TB” for Terminal type or “WB” for Wire Leads

OA172S Series

AC Fan - 115V, 230V
172 x 150 x 51mm (6.7”x 5.9” x 2.0”)

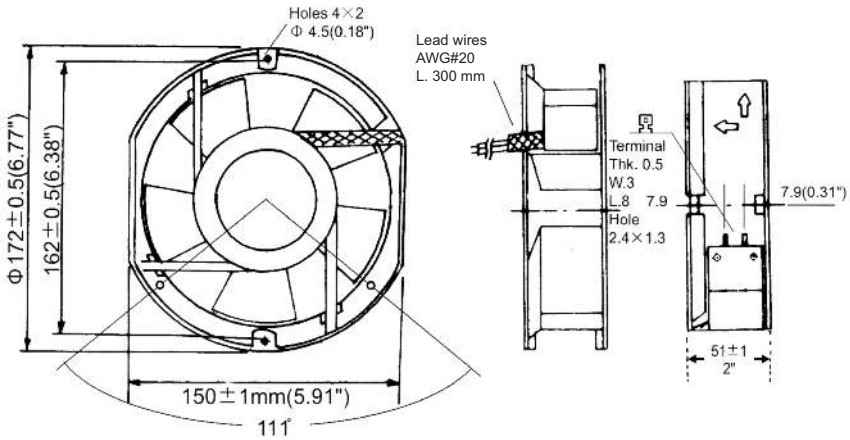

Frame	Diecast Aluminum
Impeller	PBT, UL94V-0 plastic
Connection	2x Lead Wires or Terminals
Motor	Capacitor drive, impedance protected
Bearing System	Dual ball
Insulation Resistance	>100M ohm between lead-wire and frame (500VDC)
Dielectric Strength	1 min at 1,500 VAC, 50/60Hz

Operating Temperature
Ball Bearing
-20C ~ +70C
Storage Temp
-40C ~ +80C

Life Expectancy
Ball Bearing
60,000 hours (L10 at 40C)

Weight: ~ 2.6 lbs.

m0

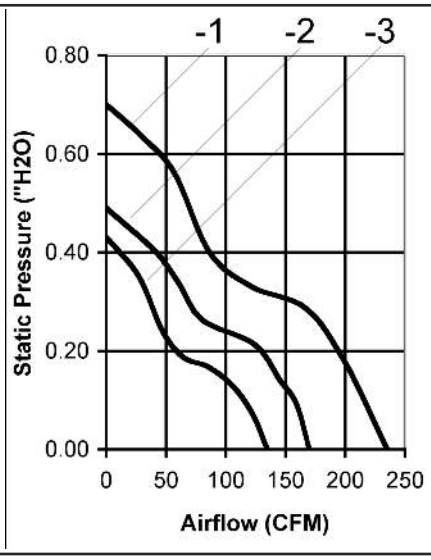

Model Number	Speed (RPM)	Airflow (CFM)	Noise (dB)	Volts AC	Voltage Range	Watts	Max. Static Pressure (“H_2O)
OA172SAP-11-1 *	3,200	235	52	115	80~130	35	0.70
OA172SAP-11-2 *	2,400	170	42	115	80~130	20	0.49
OA172SAP-11-3 *	1,800	135	33	115	80~130	16	0.43
OA172SAP-22-1 *	3,200	235	52	230	160~260	35	0.70
OA172SAP-22-2 *	2,400	170	42	230	160~260	20	0.49
OA172SAP-22-3 *	1,800	135	33	230	160~260	16	0.43

* Indicate “TB” for Terminal type or “WB” for Wire Leads

Knight Electronics, Inc.
10557 Metric Drive
Dallas, Texas 75243
214-340-0265

RoHS Compliant

Orion Fans
Information and data is subject to change without prior notification.

OA172 Series

AC Fan - 115V, 230V
172 x 51mm (6.7" x 2.0")

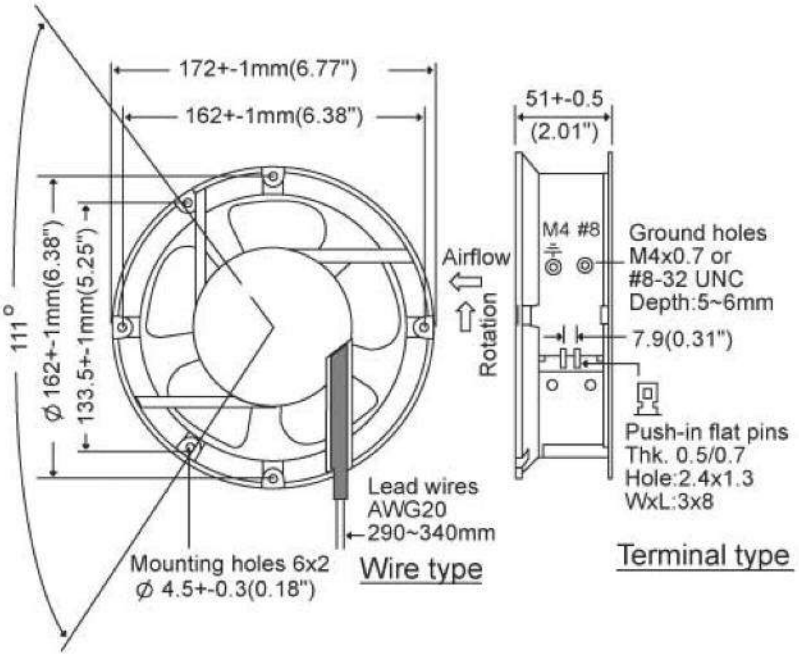

Frame	Diecast Aluminum
Impeller	PBT, UL94V-0 plastic
Connection	2x Lead Wires or Terminals
Motor	Capacitor drive, impedance protected
Bearing System	Dual ball
Insulation Resistance	>100M ohm between lead-wire and frame (500VDC)
Dielectric Strength	1 min at 1,500 VAC, 50/60Hz

Operating Temperature
Ball Bearing
-40C ~ +70C
Storage Temp
-40C ~ +80C

Life Expectancy
Ball Bearing
60,000 hours (L10 at 40C)

Weight: ~ 2.7 lbs.

m0

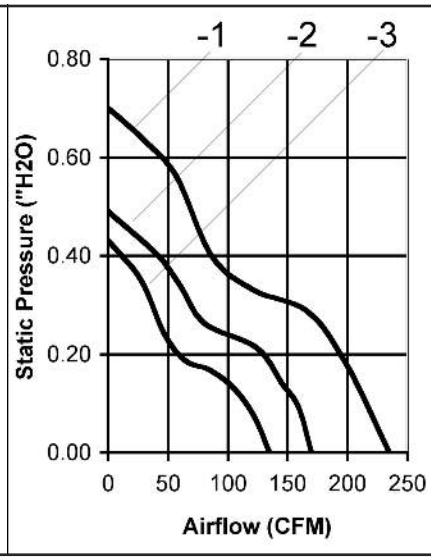

Model Number	Speed (RPM)	Airflow (CFM)	Noise (dB)	Volts AC	Voltage Range	Watts	Max. Static Pressure ("H_2O)
OA172AP-11-1 *	3,200	235	52	115	80~130	35	0.70
OA172AP-11-2 *	2,400	170	42	115	80~130	20	0.49
OA172AP-11-3 *	1,800	135	33	115	80~130	16	0.43
OA172AP-22-1 *	3,200	235	52	230	160~260	35	0.70
OA172AP-22-2 *	2,400	170	42	230	160~260	20	0.49
OA172AP-22-3 *	1,800	135	33	230	160~260	16	0.43

* Indicate "TB" for Terminal type or "WB" for Wire Leads

Knight Electronics, Inc.
10557 Metric Drive
Dallas, Texas 75243
214-340-0265

RoHS Compliant

Orion Fans
Information and data is subject to change without prior notification.

OA172 'XC Series'

AC Fan - 115V, 230V
172x150x51mm (6.7"x 5.9"x 2.0")

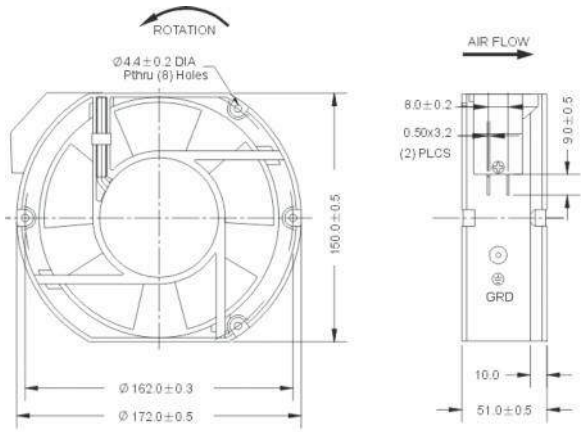

Frame	Diecast Aluminum	Operating Temperature Ball Bearing -40C ~ +70C Storage Temp -40C ~ +80C Life Expectancy Ball Bearing 60,000 hours (L10 at 40C) Weight: ~ 2.2 lbs. m4	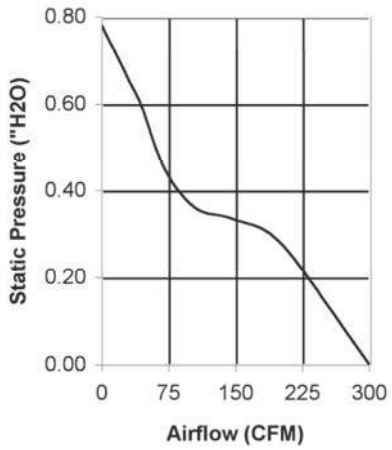
Impeller	PBT, UL94V-O plastic		
Connection	2x Lead Wires or Terminals		
Motor	Capacitor drive, thermally protected		
Bearing System	Dual ball (Sleeve available)		
Insulation Resistance	>100M ohm between lead-wire and frame (500VDC)		
Dielectric Strength	1 min at 1,500 VAC, 50/60Hz		

Part Number	OA172SAP-11-1 ( )B XC	OA172SAP-22-1 ( )B XC
Nominal Voltage	115 VAC	230 VAC
Voltage Range	100 ~ 125 VAC	200 ~ 240 VAC
Rated Power	50 W (60 Hz)	50 W (60 Hz)
Rated Speed (RPM)	3,300	3,300
Airflow - CFM	300	300
Noise Level - (dB)	61	61
Max. Static Pressure	0.78" H_2O	0.78" H_2O

( ) Indicate "T" for terminal or "W" for wire leads

Knight Electronics, Inc.
10557 Metric Drive
Dallas, Texas 75243
214-340-0265

RoHS Compliant

Orion Fans
Information and data is subject to change without prior notification.

OA5920 'Challenger Series'

AC Fan - 115V, 230V
172 x 150 x 51mm (6.7"x 5.9" x 2.0")

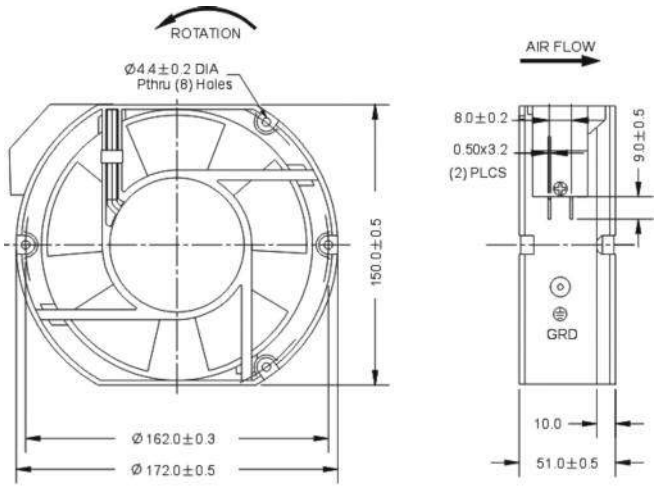

Frame	Diecast Aluminum
Impeller	PBT, UL94V-0 plastic
Connection	Terminals
Motor	Shaded pole, thermally protected
Bearing System	Dual ball (Sleeve available)
Insulation Resistance	>100M ohm between lead-wire and frame (500VDC)
Dielectric Strength	1 min at 1,500 VAC, 50/60Hz

Operating Temperature
Ball Bearing
-10C ~ +70C
Storage Temp
-40C ~ +80C

Life Expectancy
Ball Bearing
60,000 hours (L10 at 40C)

Weight: 2.0 lbs.

m4

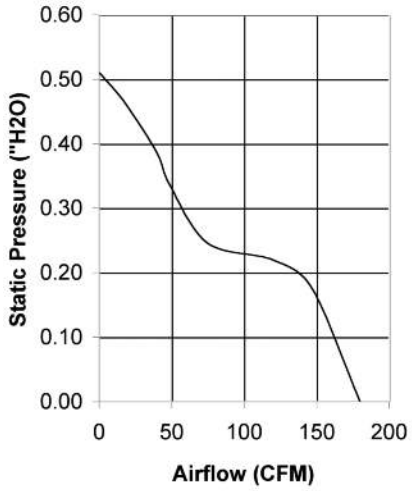

Part Number	OA5920-12TB	OA5920-23TB
Nominal Voltage	115 VAC	230 VAC
Voltage Range	80 ~ 130 VAC	160 ~ 260 VAC
Rated Power	41 W (60Hz)	41 W (60Hz)
Rated Speed (RPM)	3,000	3,000
Airflow (CFM)	180	180
Noise Level (dB)	55	55
Max. Static Pressure	0.51" H_2O	0.51" H_2O

Knight Electronics, Inc.
10557 Metric Drive
Dallas, Texas 75243
214-340-0265

RoHS Compliant

Orion Fans
Information and data is subject to change without prior notification.

OA162 Series

AC Fan - 115V, 230V
172 x 55mm (6.7" x 2.2")

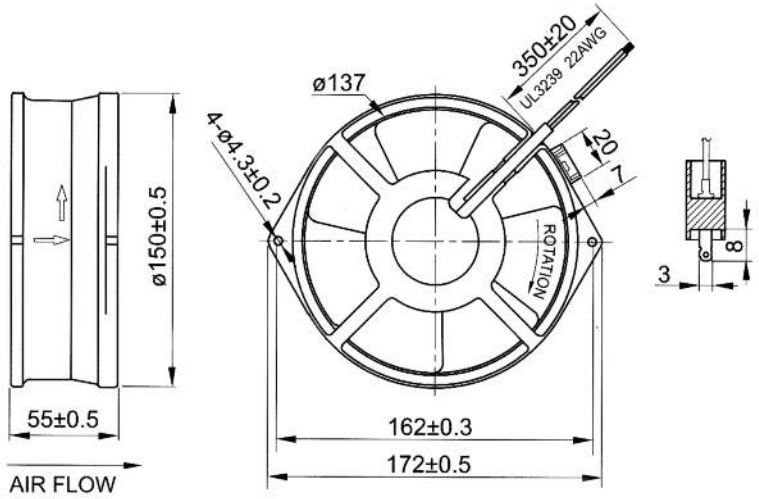

Frame & Impeller	Diecast Aluminum
Connection	Terminals or Lead Wires
Motor	Shaded Pole, thermally protected
Bearing System	Dual ball (Sleeve available)
Insulation Resistance	>100M ohm between lead-wire and frame (500VDC)
Dielectric Strength	1 min at 1,500 VAC, 50/60Hz

Operating Temperature
Ball Bearing
-40C ~ +70C
Storage Temp
-40C ~ +80C

Life Expectancy
Ball Bearing
60,000 hours (L10 at 40C)

Weight: ~ 2.4 lbs.

m2

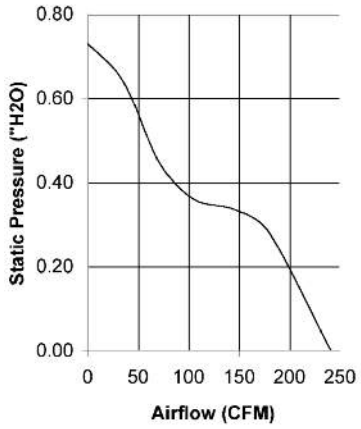

Part Number	OA162-5E-115 * B	OA162-5E-230 * B
Nominal Voltage	115 VAC	230 VAC
Voltage Range	80 ~ 130 VAC	160 ~ 260 VAC
Rated Power	31 W (60Hz)	31 W (60Hz)
Rated Speed (RPM)	3,400	3,400
Airflow (CFM)	241	241
Noise Level (dB)	66	66
Max. Static Pressure	0.73" H_2O	0.73" H_2O

* Indicate "T" for Terminal or "W" for Wire leads

Knight Electronics, Inc.
10557 Metric Drive
Dallas, Texas 75243
214-340-0265

RoHS Compliant

Orion Fans
Information and data is subject to change without prior notification.

OA180APL Series

AC Fan - 115V, 230V
180 x 65mm (7.1" x 2.6")

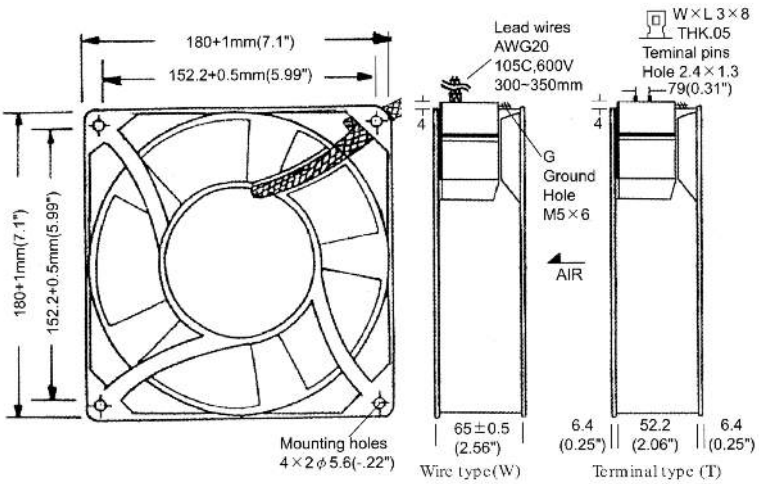

Frame	Diecast Aluminum
Impeller	PBT, UL94V-0 plastic
Connection	2x Lead Wires 20 AWG or terminals
Motor	Single phase Capacitor induction, 2/4 pole, inner rotor, thermal protection
Bearing System	Dual ball
Insulation Resistance	>100M ohm between lead-wire and frame (500VDC)
Dielectric Strength	1 min at 1,500 VAC, 50/60Hz

Operating Temperature
Ball Bearing
-20C ~ +80C
Storage Temp
-40C ~ +80C

Life Expectancy
Ball Bearing
60,000 hours (L10 at 40C)

Available as dual speed or dual voltage

Weight: ~ 4.0 lbs.

m0

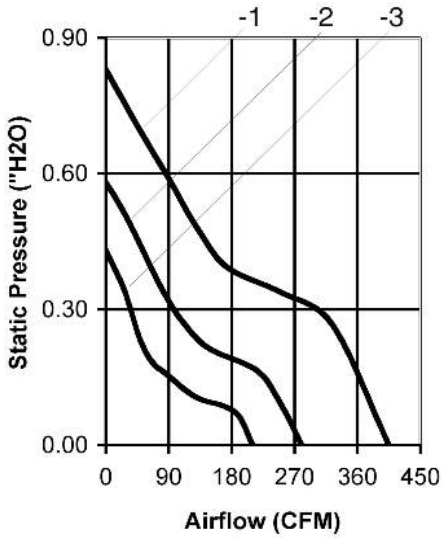

Model Number	Speed (RPM)	Airflow (CFM)	Noise (dB)	Volts AC	Voltage Range	Watts	Max. Static Pressure ("H_2O)
OA180APL-11-1 *	3,300	405	60	115	60~130	70	0.83
OA180APL-11-2 *	2,200	280	47	115	60~130	50	0.58
OA180APL-11-3 *	1,650	210	40	115	60~130	38	0.43
OA180APL-22-1 *	3,300	405	60	230	120~260	70	0.83
OA180APL-22-2 *	2,200	280	47	230	120~260	50	0.58
OA180APL-22-3 *	1,650	210	40	230	120~260	38	0.43

* Indicate "TB" for terminal or "WB" for wire leads

OA180AP Series

AC Fan - 115V, 230V
176 x 89mm (6.9" x 3.5")

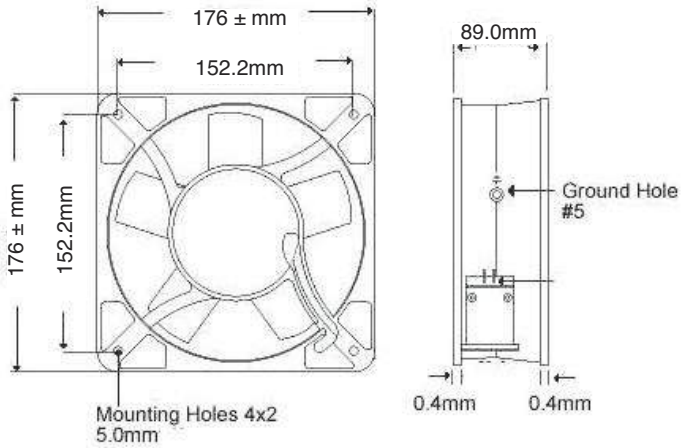

Frame	Diecast Aluminum
Impeller	PBT, UL94V-O plastic
Connection	2x Lead Wires 20 AWG or terminals
Motor	Capacitor drive, thermally protected
Bearing System	Dual ball
Insulation Resistance	>100M ohm between lead-wire and frame (500VDC)
Dielectric Strength	1 min at 1,500 VAC, 50/60Hz

Operating Temperature
Ball Bearing
-20C ~ +80C
Storage Temp
-40C ~ +80C

Life Expectancy
Ball Bearing
60,000 hours (L10, 40C)

Weight: 4.0 lbs.

m0

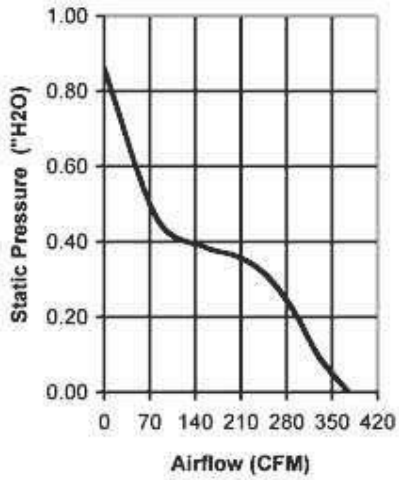

Part Number	OA180AP-11-1 *	OA180AP-22-1 *
Nominal AC Voltage	115	230
Voltage Range	60 ~ 130 VAC	120 ~ 260 VAC
Rated Power (50/60 Hz)	70 W	70 W
RPM (50/60 Hz)	3350	3350
Airflow - CFM (50/60 Hz)	375	375
Noise Level - dB (50/60 Hz)	62	62
Max. Static Pressure	0.86" H_2O	00.86" H_2O

* Indicate "TB" for terminal or "WB" for wire leads

This page is left intentionally blank

OA254 Series

AC Fan - 115V, 230V
254 x 89mm (10.0" x 3.5")

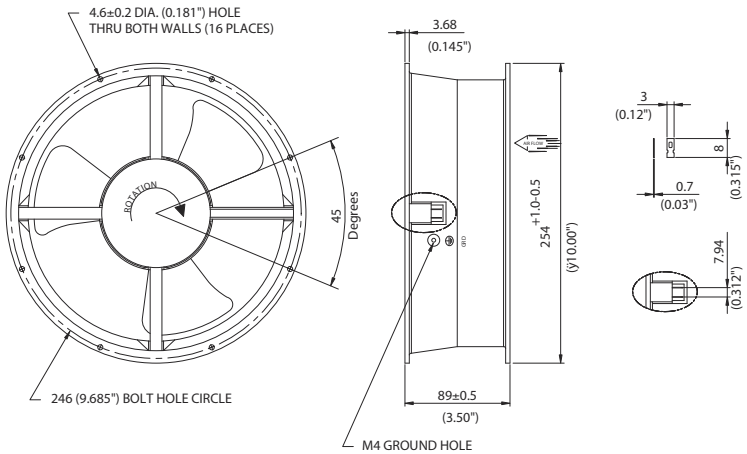

Frame	Diecast Aluminum	Operating Temperature Ball Bearing -20C ~ +80C Storage Temp -40C ~ +80C Life Expectancy Ball Bearing 60,000 hours (L10 at 40C) Weight: ~ 4.2 lbs. m2	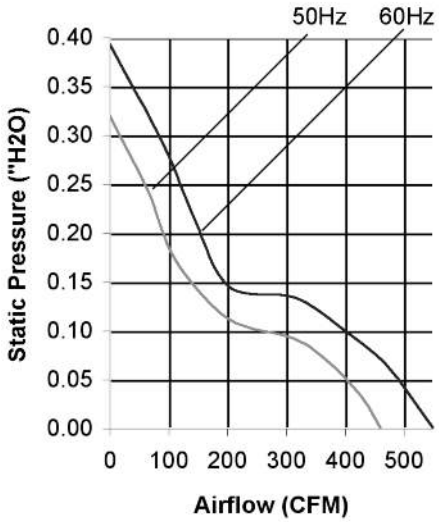
Impeller	PBT, UL94V-0 plastic		
Connection	2x Lead Wires or Terminals		
Motor	Capacitor drive, thermally protected		
Bearing System	Dual ball		
Insulation Resistance	>100M ohm between lead-wire and frame (500VDC)		
Dielectric Strength	1 min at 1,500 VAC, 50/60Hz		

Part Number	OA254AP-11-1 *	OA254AP-22-1 *
Nominal Voltage	115VAC	230VAC
Voltage Range	80 ~ 130VAC	160 ~ 260VAC
Rated Power (50/60 Hz)	31/33 W - (0.30 / 0.29 A)	31/33 W - (0.14 / 0.14 A)
Rated Speed (50/60 Hz)	1,400 / 1,650	1,400 / 1,650
Airflow - CFM (50/60 Hz)	460 / 547	460 / 547
Noise Level - dB (50/60 Hz)	52 / 55	52 / 55
Max. Static Pressure (50/60 Hz)	0.32" / 0.39" H_2O	0.32" / 0.39" H_2O

* Indicate "TB" for terminal type or "WB" for Wire leads (300mm)

Knight Electronics, Inc.
10557 Metric Drive
Dallas, Texas 75243
214-340-0265

RoHS Compliant

Orion Fans
Information and data is subject to change without prior notification.

OA254 'XC Series'

AC Fan - 115V, 230V High Performance
254 x 89mm (10.0" x 3.5")

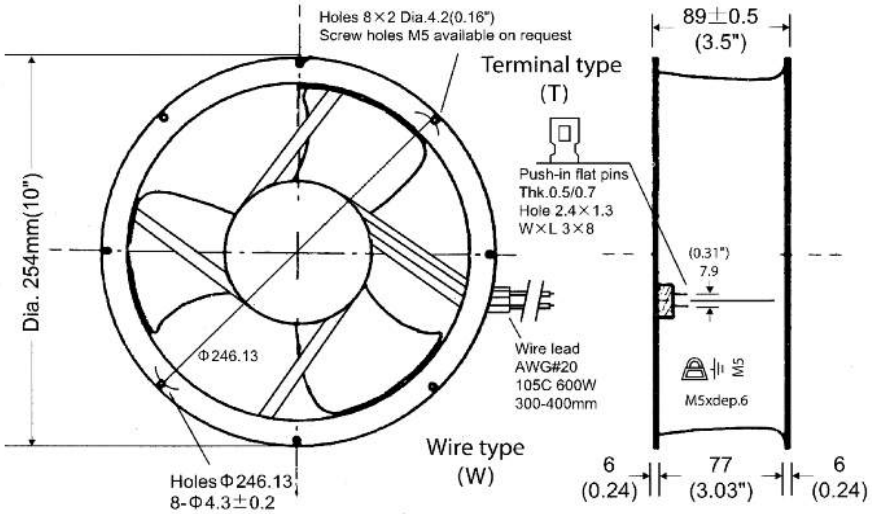

Frame	Diecast Aluminum
Impeller	PBT, UL94V-0 plastic
Connection	2x Lead Wires or Terminals
Motor	Capacitor drive, thermally protected
Bearing System	Dual ball
Insulation Resistance	>100M ohm between lead-wire and frame (500VDC)
Dielectric Strength	1 min at 1,500 VAC, 50/60Hz

Operating Temperature
Ball Bearing
-20C ~ +80C
Storage Temp
-40C ~ +80C

Life Expectancy
Ball Bearing
60,000 hours (L10 at 40C)

Weight: ~ 5.4 lbs.

m0

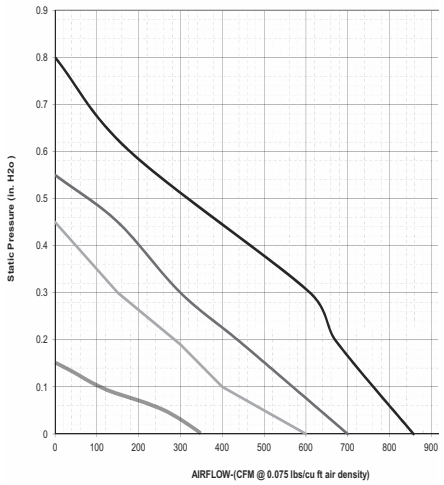

Model Number	Speed (RPM)	Airflow (CFM)	Noise (dB)	Volts AC	Voltage Range	Watts	Max. Static Pressure ("H_2O)
OA254AN-11-1 * XC	2,700	850	69	115	80~130	75	0.78
OA254AN-11-1 *	2,200	700	65	115	80~130	70	0.53
OA254AN-11-2 *	2,000	600	55	115	80~130	45	0.45
OA254AN-11-3 *	1100	320	48	115	80~130	32	0.14
OA254AN-22-1 * XC	2,700	850	69	230	160~260	75	0.78
OA254AN-22-1 *	2,200	700	65	230	160~260	70	0.53
OA254AN-22-2 *	2,000	600	55	230	160~260	45	0.45
OA254AN-22-3 *	1100	320	48	230	160~260	32	0.14

* Indicate "TB" for terminal type or "WB" for Wire leads (300mm)

Knight Electronics, Inc.
10557 Metric Drive
Dallas, Texas 75243
214-340-0265

RoHS Compliant

Orion Fans
Information and data is subject to change without prior notification.

OA225 Series

AC Fan - 115V, 230V
225 x 80mm (8.86” x 3.15”)

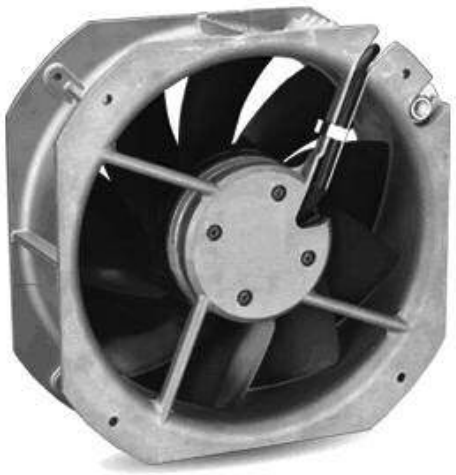

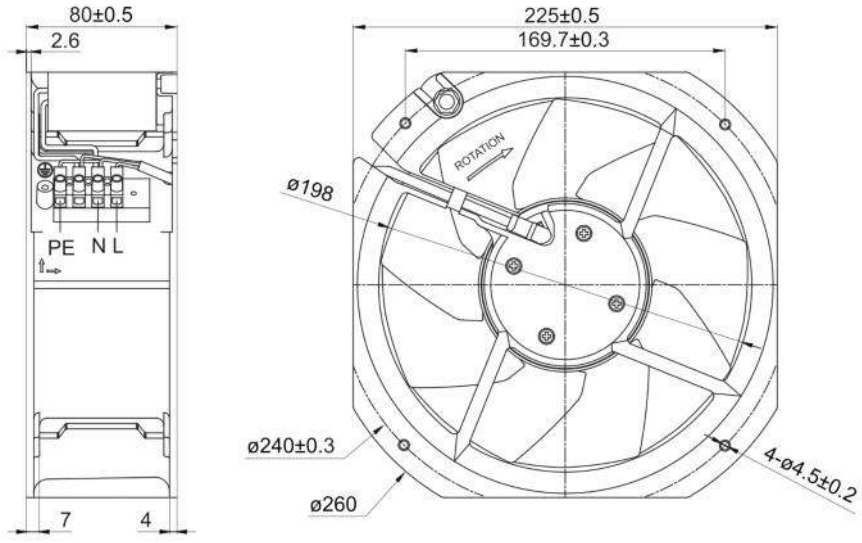

Frame	Diecast Aluminum
Impeller	Metal
Connection	Terminal Block, 18AWG
Motor	Capacitor drive, thermally protected
Bearing System	Dual ball
Insulation	Class F
Dielectric Strength	1 min at 1,500 VAC, 50/60Hz

Operating Temperature
Ball Bearing
-40C ~ +80C
Storage Temp
-40C ~ +80C

Life Expectancy
Ball Bearing
40,000 hours (L10 at 40C)

Environmental: IP55 Rated

Weight: ~ 4.7 lbs.

m2

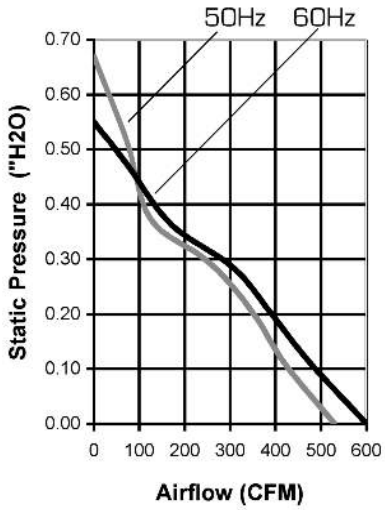

Part Number	OA225AN-11-1TB18	OA225AN-22-1TB18
Nominal Voltage	115VAC	230VAC
Voltage Range	100 ~ 125VAC	200 ~ 240VAC
Rated Power	65 / 72 W	74 / 80 W
Nominal Current	0.58 / 0.70 A	0.29 / 0.35 A
Rated Speed (RPM) 50/60Hz	2,550 / 2,800	2,550 / 2,800
Airflow (CFM) 50/60Hz	530 / 600	530 / 600
Noise Level (dB) 50/60HZ	59 / 61	59 / 61
Max. Static Pressure 50/60Hz	0.67” / 0.55” H_2O	0.67” / 0.55” H_2O

Knight Electronics, Inc.
10557 Metric Drive
Dallas, Texas 75243
214-340-0265

RoHS Compliant

Orion Fans
Information and data is subject to change without prior notification.

OA280 Series

AC Fan - 115V, 230V
280 x 80mm (11.0” x 3.15”)

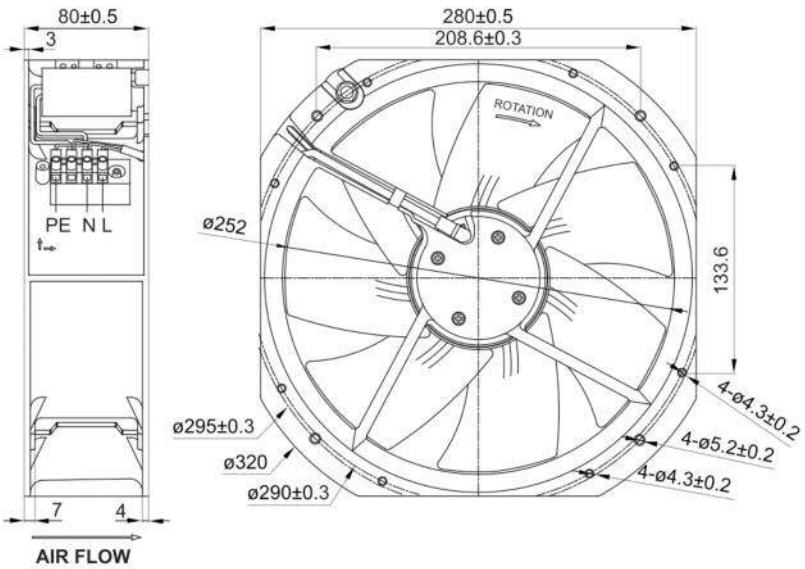

Frame	Diecast Aluminum
Impeller	Metal
Connection	Terminal Block, 18AWG
Motor	Capacitor drive, thermally protected
Bearing System	Dual ball
Insulation	Class F
Dielectric Strength	1 min at 1,500 VAC, 50/60Hz

Operating Temperature
Ball Bearing
-40C ~ +80C
Storage Temp
-40C ~ +80C

Life Expectancy
Ball Bearing
40,000 hours (L10 at 40C)

Environmental: IP55 Rated

Weight: ~ 6.2 lbs.

m2

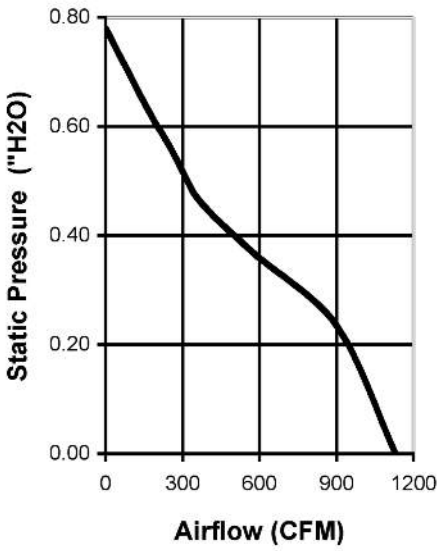

Part Number	OA280AN-11-1TB18	OA280AN-22-1TB18
Nominal Voltage	115VAC	230VAC
Voltage Range	100 ~ 125VAC	200 ~ 240VAC
Rated Power	148 W	158 W
Nominal Current	1.5 A	0.82 A
Rated Speed (RPM)	2,700	2,700
Airflow (CFM)	1,130	1,130
Noise Level (dB)	70	70
Max. Static Pressure	0.78” H_2O	0.78” H_2O

Knight Electronics, Inc.
10557 Metric Drive
Dallas, Texas 75243
214-340-0265

RoHS Compliant

Orion Fans
Information and data is subject to change without prior notification.

Dual Voltage Fans

115/230 Volts AC
80mm - 120mm (3.15" - 4.7")

Model Number 80 x 25	Speed (RPM)	Airflow (CFM)	Noise (dB)	Volts AC	Voltage Range	Watts	Max. Static Pressure ("H_2O)
OA825AP-11/22-1WB	3,000	25	28	115/230	100-120 / 200-240	9	.21
OA825AP-11/22-2WB	2,300	18	24	115/230	100-120 / 200-240	6	.14
OA825AP-11/22-3WB	1,900	16	19	115/230	100-120 / 200-240	4	.11

Model Number 80 x 38	Speed (RPM)	Airflow (CFM)	Noise (dB)	Volts AC	Voltage Range	Watts	Max. Static Pressure ("H_2O)
OA80AP-11/22-1WB	3,000	31	29	115/230	100-120 / 200-240	12	0.24
OA80AP-11/22-2WB	2,300	23	22	115/230	100-120 / 200-240	9	0.15
OA80AP-11/22-3WB	1,600	17	18	115/230	100-120 / 200-240	5	0.10

Model Number 92 x 25	Speed (RPM)	Airflow (CFM)	Noise (dB)	Volts AC	Voltage Range	Watts	Max. Static Pressure ("H_2O)
OA92AP-11/22-1WB	3,000	35	30	115/230	100-120 / 200-240	13	.20
OA92AP-11/22-2WB	2,300	27	22	115/230	100-120 / 200-240	10	.14
OA92AP-11/22-3WB	1,900	22	19	115/230	100-120 / 200-240	6	.09

Model Number 92 x 38	Speed (RPM)	Airflow (CFM)	Noise (dB)	Volts AC	Voltage Range	Watts	Max. Static Pressure ("H_2O)
OA938AP-11/22-1WB	3,100	50	32	115/230	100-120 / 200-240	9	.22
OA938AP-11/22-2WB	2,400	39	23	115/230	100-120 / 200-240	5	.17
OA938AP-11/22-3WB	1,800	26	19	115/230	100-120 / 200-240	3	.10

Model Number 120 x 25	Speed (RPM)	Airflow (CFM)	Noise (dB)	Volts AC	Voltage Range	Watts	Max. Static Pressure ("H_2O)
OA125AP-11/22-1WB	2,900	81	32	115/230	100-120 / 200-240	13	.23
OA125AP-11/22-2WB	2,300	60	27	115/230	100-120 / 200-240	10	.18
OA125AP-11/22-3WB	1,600	42	22	115/230	100-120 / 200-240	6	.12

Model Number 120 x 38	Speed (RPM)	Airflow (CFM)	Noise (dB)	Volts AC	Voltage Range	Watts	Max. Static Pressure ("H_2O)
OA109AP-11/22-1WB	3,000	110	42	115/230	100-120 / 200-240	15	.28
OA109AP-11/22-2WB	2,300	71	35	115/230	100-120 / 200-240	11	.24
OA109AP-11/22-3WB	1,600	51	25	115/230	100-120 / 200-240	8	.15

Dual voltage fans are connected via 4 power leads. They can be configured for switchable operation.

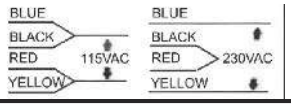

Knight Electronics, Inc.
10557 Metric Drive
Dallas, Texas 75243
214-340-0265

RoHS Compliant

Orion Fans
Information and data is subject to change without prior notification.

OA109AP-IP55

AC Fan - 115V,230V
120 x 38mm (4.7"x1.5")

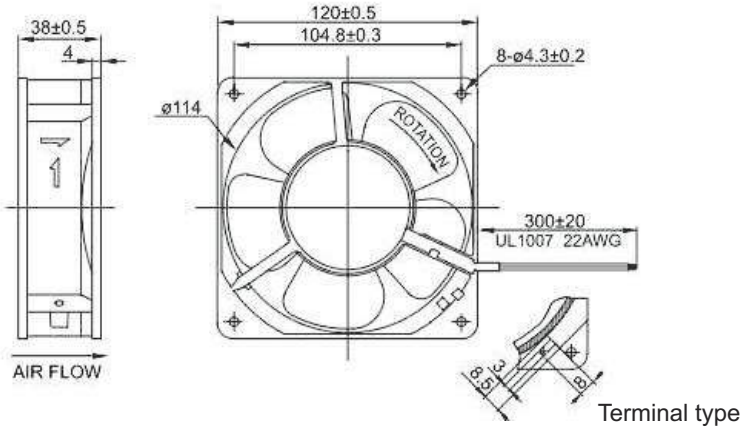

Frame	Diecast Aluminum	Operating Temperature -20C ~ +70C Life Expectancy >40,000 hours (L10, 40C) Rated IP55 Class B Insulation Weight: ~ 1.05 lbs. m2	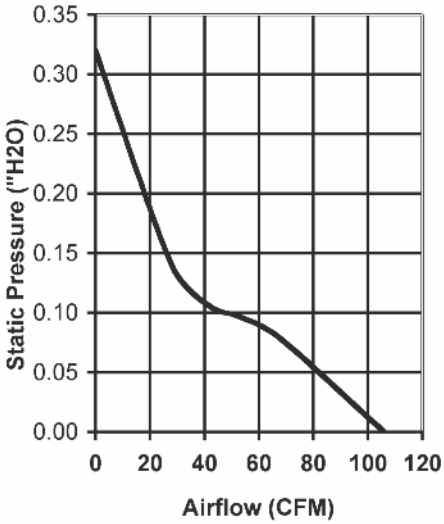
Impeller	PBT, UL94V-O plastic		
Connection	Terminals		
Motor	AC shaded pole, impedance		
Bearing System	Dual ball		
Insulation Resistance	>100M ohm between lead-wire and frame		
Dielectric Strength	1 min at 1,500 VAC, 50/60Hz		

Model Number	OA109AP-11-1TBIP55	OA109AP-22-1TBIP55
Part Number	210315302	210615302
Nominal Voltage	115 VAC	230 VAC
Nominal Current	0.16A	.08A
Rated Power	12 W (60Hz)	15 W (60Hz)
Rated Speed (RPM)	3,100	3,100
Airflow (CFM)	106	106
Noise Level (dB)	46	46
Max. Static Pressure	0.32" H_2O	0.32" H_2O

Knight Electronics, Inc.
10557 Metric Drive
Dallas, Texas 75243
214-340-0265

RoHS Compliant

Orion Fans
Information and data is subject to change without prior notification.

OA172SAPL IP55 Series

172 x 150 x 38mm
(6.7”x 5.9”x 1.5”)

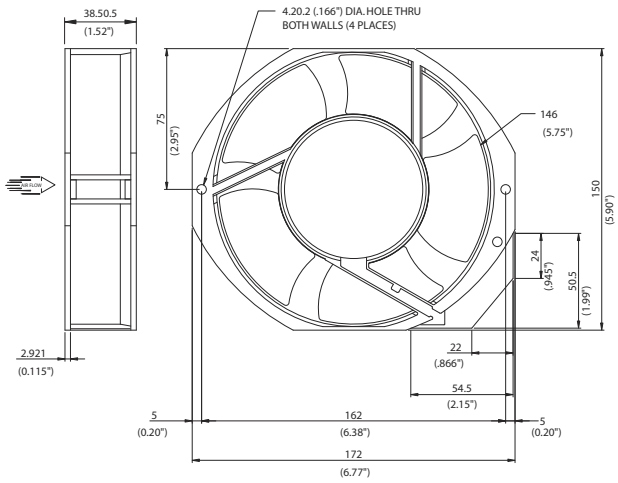

Frame	Diecast Aluminum
Impeller	PBT, UL94V-0 plastic
Connection	2x Lead Wires or Terminals
Motor	Capacitor drive, thermally protected
Bearing System	Dual ball
Insulation Resistance	>100M ohm between lead-wire and frame (500VDC)
Dielectric Strength	1 min at 1,500 VAC, 50/60Hz

Operating Temperature
Ball Bearing
-20C ~ +80C
Storage Temp
-40C ~ +80C

Life Expectancy
Ball Bearing
60,000 hours (L10 at 40C)

Environmental Protection:
IP55

Weight: ~ 1.6 lbs.

m2

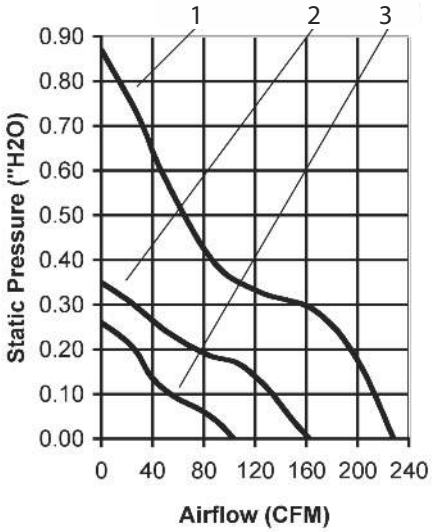

Model Number	Speed (RPM)	Airflow (CFM)	Noise (dB)	Volts AC	Voltage Range	Watts	Max. Static Pressure (“H_2O)
OA172SAPL-11-1 *IP55	3,400	228	58	115	103~126	28	0.87
OA172SAPL-11-2 *IP55	2,750	162	50	115	103~126	27	0.35
OA172SAPL-11-3 *IP55	1,700	103	44	115	103~126	26	0.26
OA172SAPL-22-1 *IP55	3,400	228	58	230	160~260	28	0.87
OA172SAPL-22-3 *IP55	1,700	103	44	230	160~260	26	0.26

* Indicate “TB” for Terminal type or “WB” for Wire Leads

Knight Electronics, Inc.
10557 Metric Drive
Dallas, Texas 75243
214-340-0265

RoHS Compliant

Orion Fans
Information and data is subject to change without prior notification.

OA172SAP Series - IP55

AC Fan - 115V, 230V
172x150x51mm (6.7”x 5.9”x 2.0”)

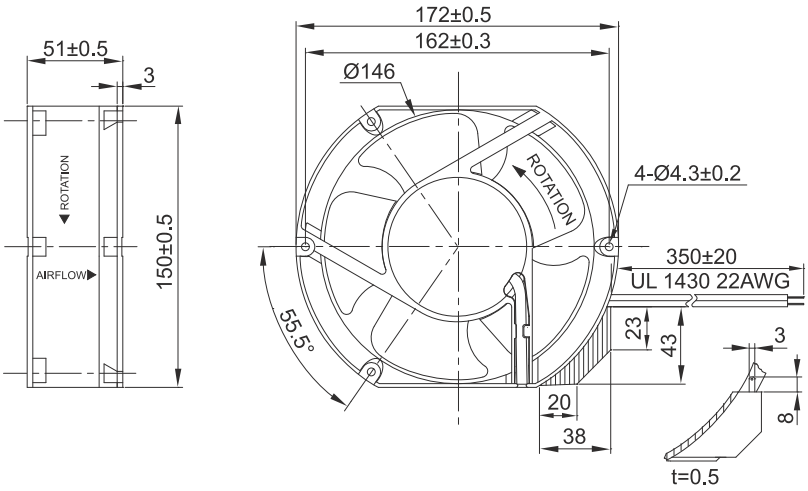

Frame	Diecast Aluminum	Operating Temperature -20C ~ +70C	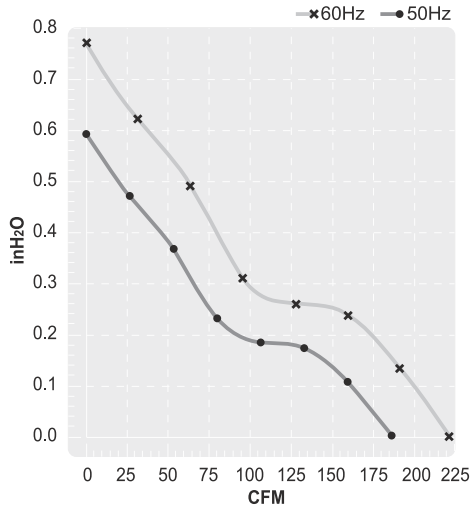
Impeller	PBT, UL94V-O plastic	Life Expectancy Ball Bearing 40,000 hours (L10 at 40C)	
Connection	Terminals		
Motor	AC Capacitor, Thermally protected, Class B insulation	Rated IP55 Class B insulation	
Bearing System	Dual ball bearing	Weight: ~ 2.6 lbs.	
Insulation Resistance	>100M ohm between lead-wire and frame (500VDC)		
Dielectric Strength	1,500V / 1 min	m4	

Model Number	OA172SAP-11-1TBIP55	OA172SAP-22-1TBIP55
Part Number	230315302	230615302
Nominal Voltage	115 VAC	230 VAC
Voltage Range	103 ~ 126 VAC	207 ~ 253 VAC
Rated Current	0.25 A	0.12 A
Locked Current	0.43 A	0.19A
Rated Power	31 W	29 W
Rated Speed (RPM)	3,400	3,400
Airflow - CFM	226	226
Noise Level - (dB)	58	58
Max. Static Pressure	0.79” H_2O	0.79” H_2O

Knight Electronics, Inc.
10557 Metric Drive
Dallas, Texas 75243
214-340-0265

RoHS Compliant

Orion Fans
Information and data is subject to change without prior notification.

OA180AP-22-1TB IP55

AC Fan - 230V
180 x 90mm (7.1″ x 3.5″)

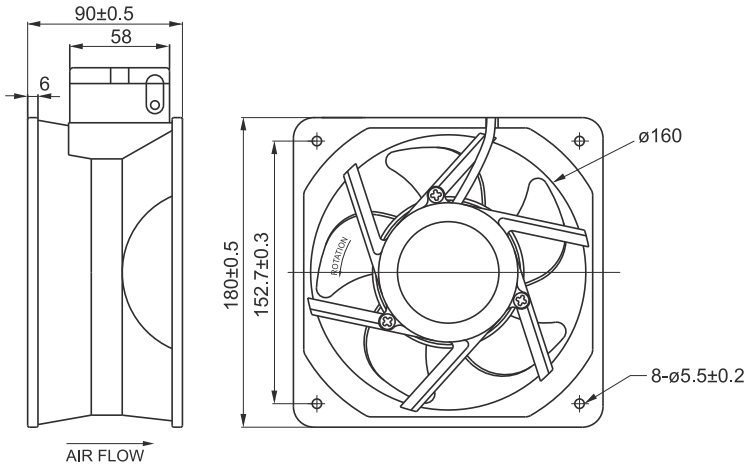

Frame	Diecast Aluminum
Impeller	PBT, UL94V-O plastic
Connection	Terminals
Motor	AC Capacitor, Impedenca and thermally protected
Bearing System	Dual ball bearing
Insulation Resistance	>100M ohm between lead-wire and frame (500VDC)
Dielectric Strength	1 min at 1,500 VAC, 50/60Hz

Operating Temperature
-20C ~ +80C

Life Expectancy
Ball Bearing
60,000 hours (L10 at 40C)

Rated IP55

Class B insulation

Weight: ~ 4.0 lbs.

m2

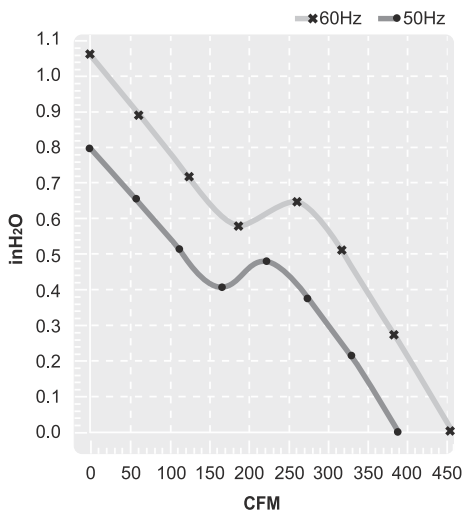

Model Number	OA180AP-22-1TB-IP55
Part Number	218615302
Nominal Voltage	230
Voltage Range	120 ~ 260 VAC
Rated Current	0.32 A (1.01 A locked)
Rated Power	72 W
Rated Speed (RPM)	3,400
Airflow - CFM	460
Noise Level - (dB)	59
Max. Static Pressure	1.1″ H_2O

Knight Electronics, Inc.
10557 Metric Drive
Dallas, Texas 75243
214-340-0265

RoHS Compliant

Orion Fans
Information and data is subject to change without prior notification.

OA109 Series - Salt Fog

AC Fan - 115V, 230V
120 x 38mm (4.7" x 1.5")

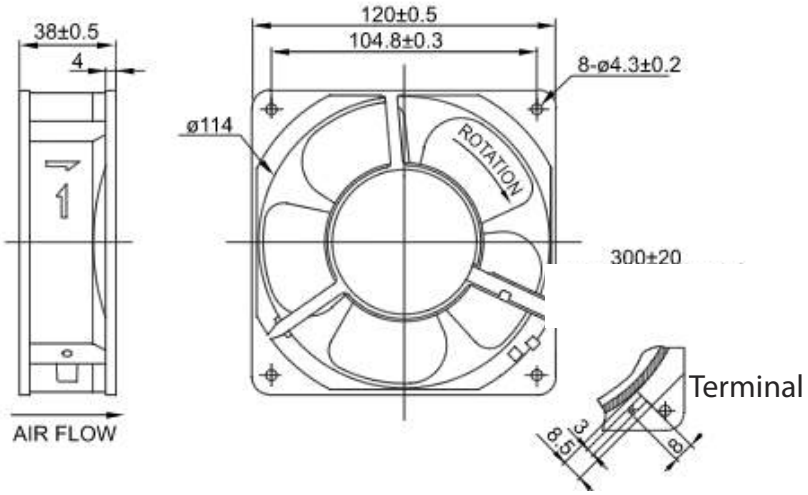

Frame	Diecast Aluminum
Impeller	PBT, UL94V-0 plastic
Connection	Terminals
Motor	AC shaded pole, impedance protected
Bearing System	Dual Ball
Insulation Resistance	>100M ohm between leadwire and frame (500VDC)
Dielectric Strength	1 min at 1,500 VAC, 50/60Hz

Environmental Protection
SALT FOG RATED (SF)

Operating Temperature
-20C ~ +70C
Storage Temp
-30C ~ +80C

Life Expectancy
>40,000 hours (L10, 40C)

Weight: ~ 1.14 lbs

m2

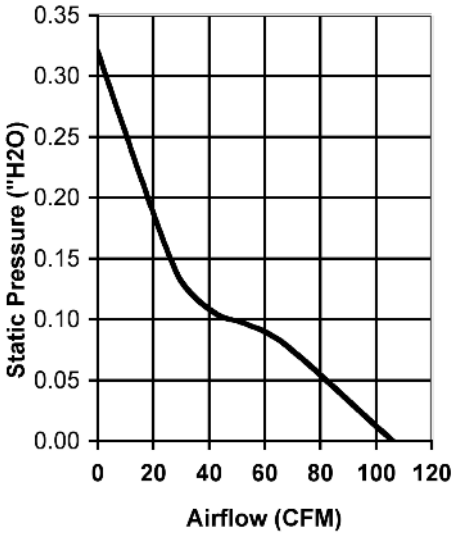

Model Number	OA109AP-11-1TBSF	OA109AP-22-1TBSF
Part Number	210315562	210615562
Nominal Voltage	115 VAC	230 VAC
Nominal Current	0.16 A	0.08 A
Rated Power	12 W (60Hz)	15 W (60Hz)
Rated Speed (RPM)	3,100	3,100
Airflow (CFM)	106	106
Noise Level (dB)	46	46
Max. Static Pressure	0.32" H_2O	0.32" H_2O

Knight Electronics, Inc.
10557 Metric Drive
Dallas, Texas 75243
214-340-0265

RoHS Compliant

Orion Fans
Information and data is subject to change without prior notification.

OA172S Series - Salt Fog

AC Fan - 115V, 230V
172 x 150 x 51mm (6.7”x 5.9”x 2”)

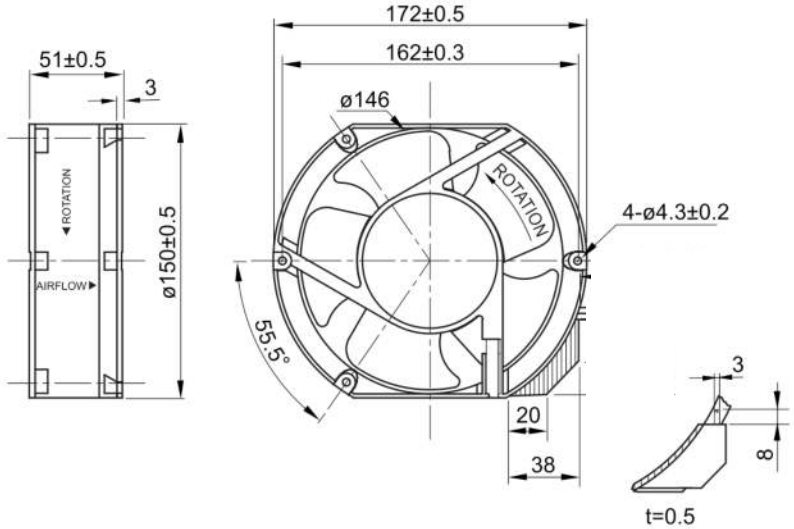

Frame	Diecast Aluminum
Impeller	PBT, UL94V-0 plastic
Connection	Terminals
Motor	AC Capacitor drive, Thermally protected
Bearing System	Dual ball bearing
Insulation Resistance	>100M ohm between lead-wire and frame (500VDC)
Dielectric Strength	1 min at 1,500 VAC,50/60 Hz

Environmental Protection
SALT FOG RATED

Operating Temperature
-20C ~ +70C
Storage Temp
-30C ~ +80C

Life Expectancy
>40,000 hours (L10, 40C)

Weight: ~ 1.9 lbs
m2

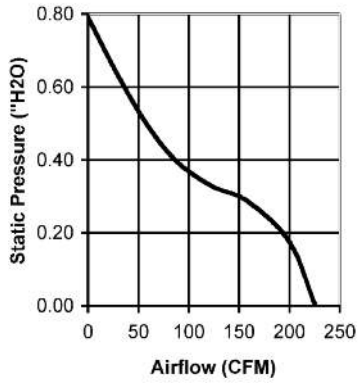

Model Number	OA172SAP-11-1TBSF	OA172SAP-22-1TBSF
Part Number	230315562	230615562
Nominal Voltage	115 VAC	230 VAC
Voltage Range	103 ~ 126 VAC	207 ~ 253 VAC
Rated Current	0.25 A	0.12 A
Locked Current	0.43 A	0.19 A
Rated Power	31 W	29 W
Rated Speed (RPM)	3,400	3,400
Airflow (CFM)	226	226
Noise Level (dB)	58	58
Max. Static Pressure (” H_2O)	0.79	0.79

OA172 XC Series - Salt Fog

AC Fan - 115V, 230V
172 x 150 x 55mm (6.7”x 5.9”x 2.2”)

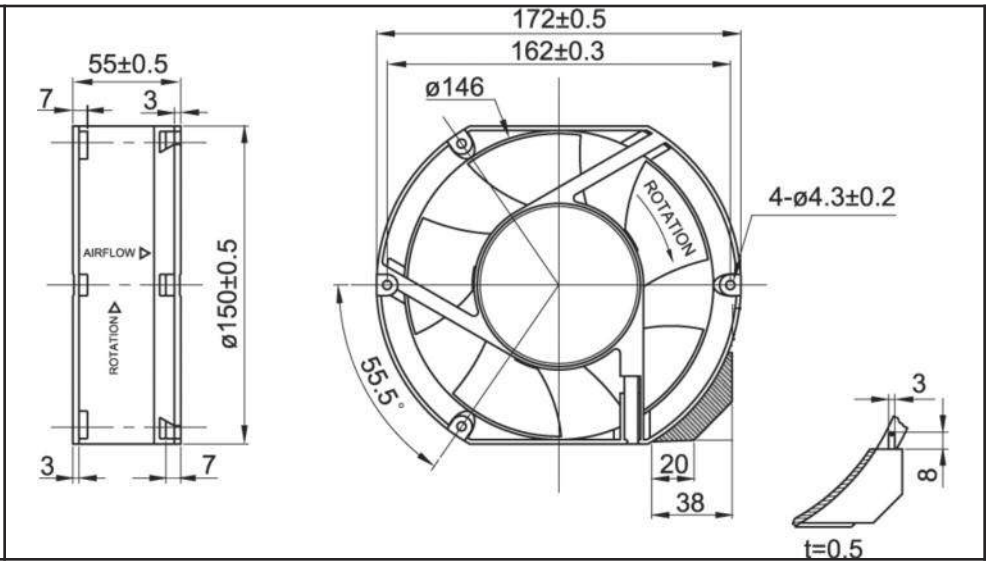

Frame	Diecast Aluminum
Impeller	PBT, UL94V-0 plastic
Connection	Terminals
Motor	AC Capacitor drive, Thermally protected
Bearing System	Dual ball bearing
Insulation Resistance	>100M ohm between lead-wire and frame (500VDC)
Dielectric Strength	1 min at 1,500 VAC,50/60 Hz

Environmental Protection
SALT FOG RATED

Operating Temperature
-20C ~ +70C
Storage Temp
-30C ~ +80C

Life Expectancy
>40,000 hours (L10, 40C)

Weight: ~ 2.4 lbs
m2

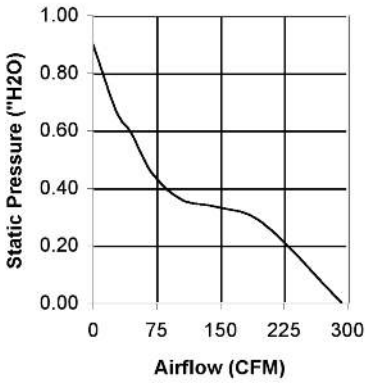

Model Number	OA172SAP-11-1TBXCSF	OA172SAP-22-1TBXCSF
Part Number	230385562	230685562
Nominal Voltage	115 VAC	230 VAC
Voltage Range	103 ~ 126 VAC	207 ~ 253 VAC
Rated Current	0.34 A	0.17 A
Locked Current	0.76 A	0.38 A
Rated Power	38 W	38 W
Rated Speed (RPM)	3,400	3,400
Airflow (CFM)	293	293
Noise Level (dB)	60	60
Max. Static Pressure (” H_2O)	0.90	0.90

OA254 Series - Salt Fog

AC Fan - 115V, 230V
254 x 89mm (10.0” x 3.5”)

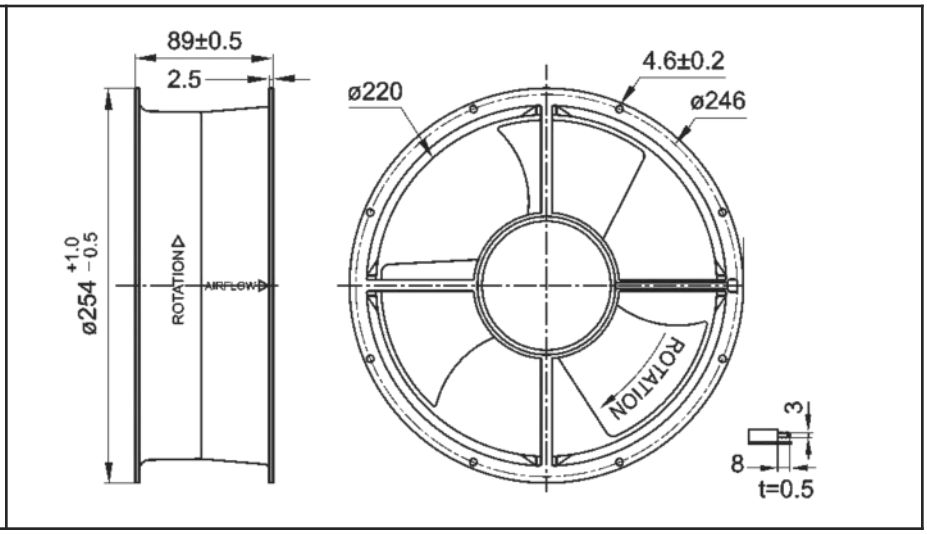

Frame	Diecast Aluminum
Impeller	PBT, UL94V-0 plastic
Connection	Terminals
Motor	Capacitor drive, thermally protected
Bearing System	Dual ball
Insulation Resistance	>100M ohm between lead-wire and frame (500VDC)
Dielectric Strength	1 min at 1,500 VAC, 50/60Hz

Environmental Protection
SALT FOG RATED (SF)

Operating Temperature
Ball Bearing
-20C ~ +80C
Storage Temp
-30C ~ +80C

Life Expectancy
Ball Bearing
60,000 hours (L10 at 40C)

Weight: ~ 4.3 lbs

m2

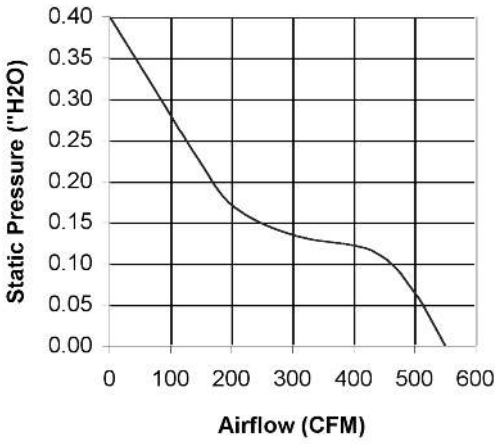

Model Number	OA254AP-11-1TBSF	OA254AP-22-1TBSF
Part Number	254315562	254615562
Nominal Voltage	115VAC	230VAC
Current (Amps)	0.29 A (0.51 locked)	0.14 A (0.25 locked)
Rated Power	33 W	33 W
Rated Speed	1,650	1,650
Airflow - CFM	550	550
Noise Level - dB	55	55
Max. Static Pressure	0.40” H_2O	0.40” H_2O

Knight Electronics, Inc.
10557 Metric Drive
Dallas, Texas 75243
214-340-0265

RoHS Compliant

Orion Fans
Information and data is subject to change without prior notification.

OA80 Series - All Metal

AC Fan - 115V, 230V
80 x 38mm (3.15" x 1.5")

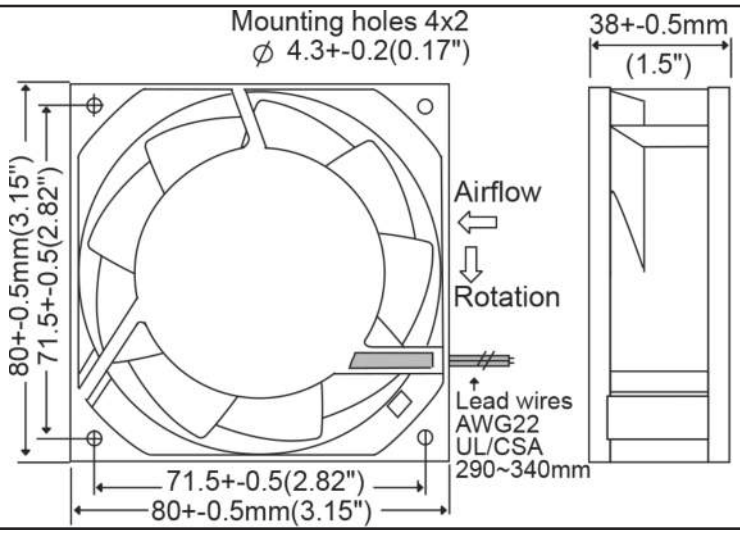

Frame	Diecast Aluminum
Impeller	Metal Alloy
Connection	2x Lead Wires 22 AWG or terminals
Motor	Shaded pole, impedance protected
Bearing System	Dual ball bearing
Insulation Resistance	>100M ohm between lead-wire and frame (500VDC)
Dielectric Strength	1 min at 1,500 VAC, 50/60Hz

Operating Temperature
Ball Bearing
-30C ~ +80C
(non-condensing)
Storage Temp
-40C ~ +100C

Life Expectancy
Ball Bearing
50,000 hours (L10 at 55C)

Environmental Protection
IP55

Weight: ~ 0.95 lbs

m0

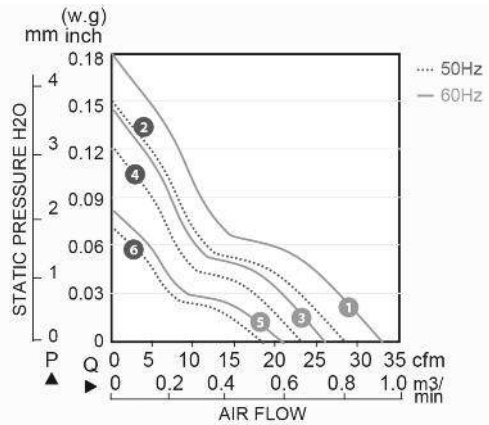

Model Number	Speed (RPM)	Airflow (CFM)	Noise (dB)	Volts AC	Voltage Range	Watts	Max. Static Pressure ("H_2O)	Curves
OA80AP-11-1 * 1855	2,750 3,200	28 33	35	115	100~120	15 13	0.22	2 (50Hz) 1 (60Hz)
OA80AP-11-2 * 1855	2,200 2,500	23 26	30	115	100~120	12 10	0.16	4 (50Hz) 3 (60Hz)
OA80AP-11-3 * 1855	1,700 1,900	18 21	23	115	100~120	8 6	0.07	6 (50Hz) 5 (60Hz)
OA80AP-22-1 * 1855	2,750 3,200	28 33	35	230	200~240	15 13	0.22	2 (50Hz) 1 (60Hz)
OA80AP-22-2 * 1855	2,200 2,500	23 26	30	230	200~240	12 10	0.16	4 (50Hz) 3 (60Hz)
OA80AP-22-3 * 1855	1,700 1,900	18 21	23	230	200~240	8 6	0.07	6 (50Hz) 5 (60Hz)

* Indicate "TB" for terminal type or "WB" for lead wires

OA938 Series - All Metal

AC Fan - 115V, 230V
92 x 38mm (3.62" x 1.5")

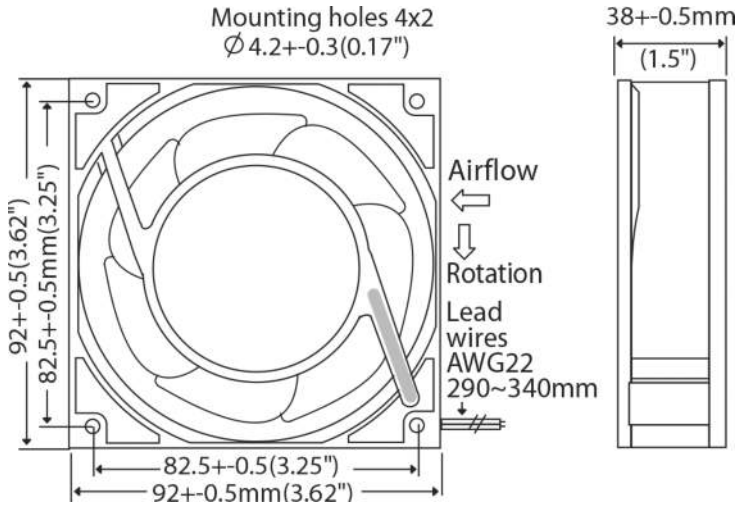

Frame	Diecast Aluminum
Impeller	Metal Alloy
Connection	2x Lead Wires 22 AWG or terminals
Motor	Shaded pole, impedance protected
Bearing System	Dual ball bearing
Insulation Resistance	>100M ohm between lead-wire and frame (500VDC)
Dielectric Strength	1 min at 1,500 VAC, 50/60Hz

Operating Temperature
Ball Bearing
-30C ~ +80C
(non-condensing)
Storage Temp
-40C ~ +100C

Life Expectancy
Ball Bearing
50,000 hours (L10 at 55C)

Environmental Protection
IP55

Weight: ~ 1.1 lbs

m0

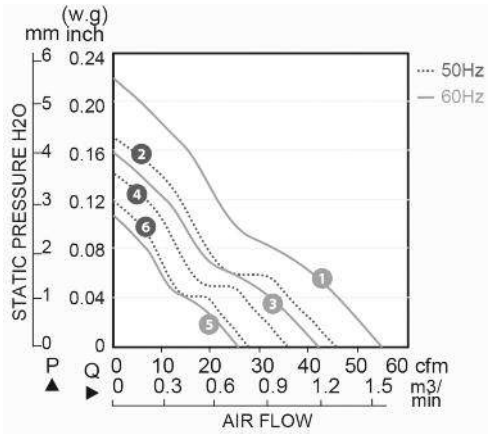

Model Number	Speed (RPM)	Airflow (CFM)	Noise (dB)	Volts AC	Voltage Range	Watts	Max. Static Pressure ("H_2O)	Curves
OA938AP-11-1 * 1855	2,700 3,150	45 55	40	115	100~120	17 15	0.17 0.22	2 (50Hz) 1 (60Hz)
OA938AP-11-2 * 1855	2,350 2,600	36 42	33	115	100~120	13 11	0.14 0.16	4 (50Hz) 3 (60Hz)
OA938AP-11-3 * 1855	1,950 1,850	29 27	23	115	100~120	9 7	0.12 0.11	6 (50Hz) 5 (60Hz)
OA938AP-22-1 * 1855	2,700 3,150	45 55	40	230	200~240	17 15	0.17 0.22	2 (50Hz) 1 (60Hz)
OA938AP-22-2 * 1855	2,350 2,600	36 42	33	230	200~240	13 11	0.14 0.16	4 (50Hz) 3 (60Hz)
OA938AP-22-3 * 1855	1,950 1,850	29 27	23	230	200~240	9 7	0.12 0.11	6 (50Hz) 5 (60Hz)

* Indicate "TB" for terminal type or "WB" for lead wires

Knight Electronics, Inc.
10557 Metric Drive
Dallas, Texas 75243
214-340-0265

RoHS Compliant

Orion Fans
Information and data is subject to change without prior notification.

OA109 Series - All Metal

AC Fan - 115V, 230V
120 x 38mm (4.7" x 1.5")

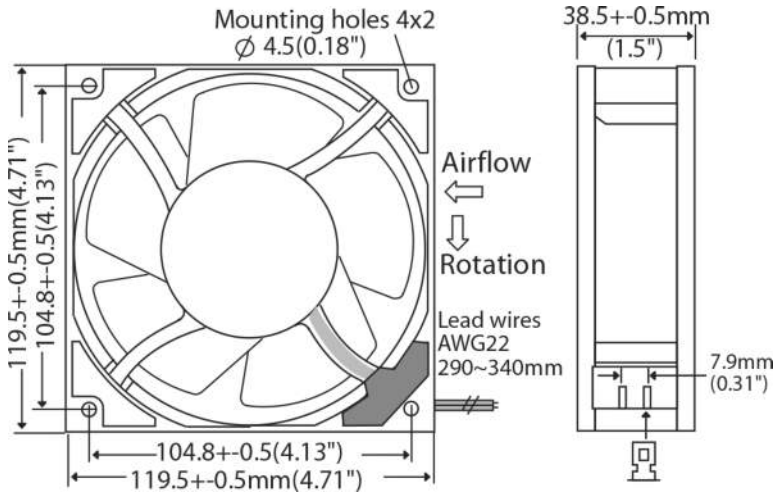

Frame	Diecast Aluminum
Impeller	Metal Alloy
Connection	2x Lead Wires 22 AWG or terminals
Motor	Shaded pole, impedance protected
Bearing System	Dual ball bearing
Insulation Resistance	>100M ohm between lead-wire and frame (500VDC)
Dielectric Strength	1 min at 1,500 VAC, 50/60Hz

Operating Temperature
Ball Bearing
-30C ~ +80C
(non-condensing)
Storage Temp
-40C ~ +100C

Life Expectancy
Ball Bearing
50,000 hours (L10 at 55C)

Environmental Protection
IP55

Weight: ~ 1.3 lbs

m0

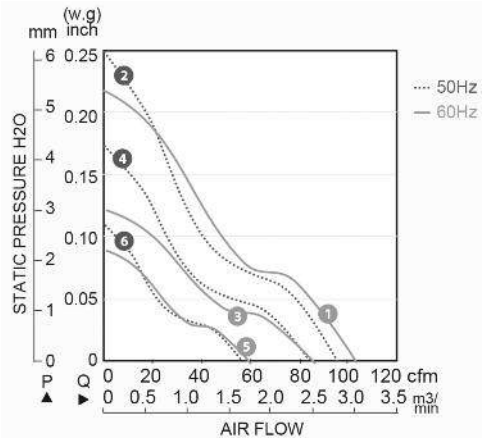

Model Number	Speed (RPM)	Airflow (CFM)	Noise (dB)	Volts AC	Voltage Range	Watts	Max. Static Pressure ("H_2O)	Curves
OA109AP-11-1 * 1855	2,650 3,100	90 105	48	115	100~120	21 10	0.25 0.22	2 (50Hz) 1 (60Hz)
OA109AP-11-2 * 1855	2,400 2,500	82 85	43	115	100~120	14 13	0.17 0.12	4 (50Hz) 3 (60Hz)
OA109AP-11-3 * 1855	1,700 1,800	58 60	32	115	100~120	12 9	0.11 0.09	6 (50Hz) 5 (60Hz)
OA109AP-22-1 * 1855	2,650 3,100	90 105	48	230	200~240	21 10	0.25 0.22	2 (50Hz) 1 (60Hz)
OA109AP-22-2 * 1855	2,400 2,500	82 85	43	230	200~240	14 13	0.17 0.12	4 (50Hz) 3 (60Hz)
OA109AP-22-3 * 1855	1,700 1,800	58 60	32	230	200~240	12 9	0.11 0.09	6 (50Hz) 5 (60Hz)

* Indicate "TB" for terminal type or "WB" for lead wires

Knight Electronics, Inc.
10557 Metric Drive
Dallas, Texas 75243
214-340-0265

RoHS Compliant

Orion Fans
Information and data is subject to change without prior notification.

OA119 Series - All Metal

AC Fan - 115V, 230V
127 x 38mm (5.0" x 1.5")

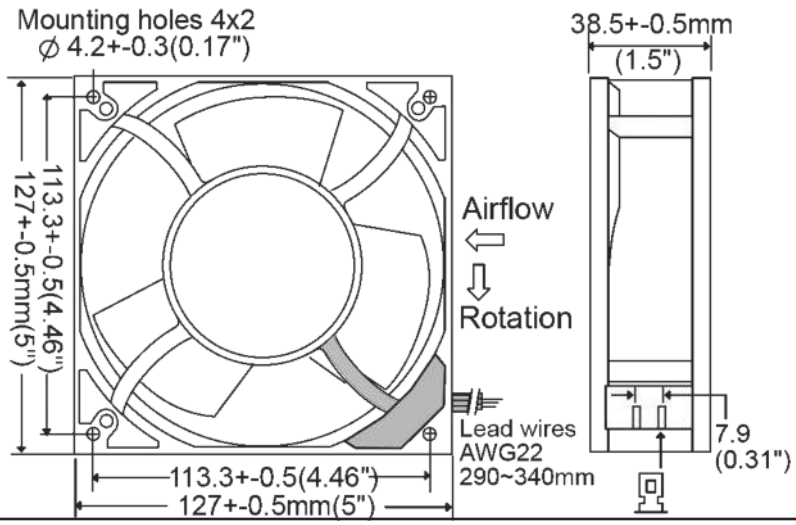

Frame	Diecast Aluminum
Impeller	Metal Alloy
Connection	2x Lead Wires 22 AWG or terminals
Motor	Shaded pole, impedance protected
Bearing System	Dual ball bearing
Insulation Resistance	>100M ohm between lead-wire and frame (500VDC)
Dielectric Strength	1 min at 1,500 VAC, 50/60Hz

Operating Temperature
Ball Bearing
-30C ~ +80C
(non-condensing)
Storage Temp
-40C ~ +100C

Life Expectancy
Ball Bearing
50,000 hours (L10 at 55C)
Environmental Protection
IP55

Weight: ~ 1.4 lbs

m0

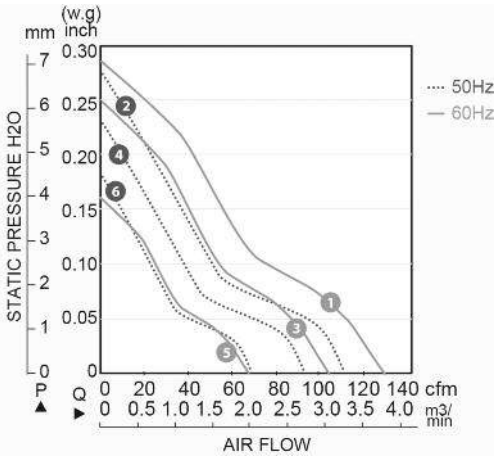

Model Number	Speed (RPM)	Airflow (CFM)	Noise (dB)	Volts AC	Voltage Range	Watts	Max. Static Pressure ("H_2O)	Curves
OA119AP-11-1 * 1855	2,600 2,950	110 128	48	115	100~120	29 26	0.27 0.29	2 (50Hz) 1 (60Hz)
OA119AP-11-2 * 1855	2,300 2,400	95 105	42	115	100~120	23 20	0.23 0.25	4 (50Hz) 3 (60Hz)
OA119AP-11-3 * 1855	1,600 1,500	68 65	28	115	100~120	18 15	0.18 0.16	6 (50Hz) 5 (60Hz)
OA119AP-22-1 * 1855	2,600 2,950	110 128	48	230	200~240	29 26	0.27 0.29	2 (50Hz) 1 (60Hz)
OA119AP-22-2 * 1855	2,300 2,400	95 105	42	230	200~240	23 20	0.23 0.25	4 (50Hz) 3 (60Hz)
OA119AP-22-3 * 1855	1,600 1,500	68 65	28	230	200~240	18 15	0.18 0.16	6 (50Hz) 5 (60Hz)

* Indicate "TB" for terminal type or "WB" for lead wires

Knight Electronics, Inc.
10557 Metric Drive
Dallas, Texas 75243
214-340-0265

RoHS Compliant

Orion Fans
Information and data is subject to change without prior notification.

OA172S Series - All Metal

AC Fan - 115V, 230V
172 x 150 x 51mm (6.7”x 5.9”x2.0”)

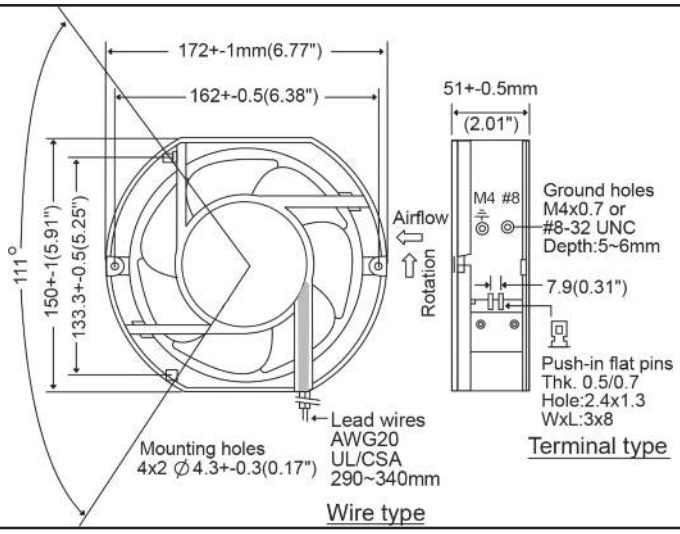

Frame	Diecast Aluminum
Impeller	Metal Alloy
Connection	2x Lead Wires 20 AWG or terminals
Motor	Shaded pole, thermally protected
Bearing System	Dual ball bearing
Insulation Resistance	>100M ohm between lead-wire and frame (500VDC)
Dielectric Strength	1 min at 1,500 VAC, 50/60Hz

Operating Temperature
Ball Bearing
-30C ~ +80C
(non-condensing)
Storage Temp
-40C ~ +100C

Life Expectancy
Ball Bearing
50,000 hours (L10 at 55C)
Environmental Protection
IP55

Weight: ~ 2.65 lbs

m0

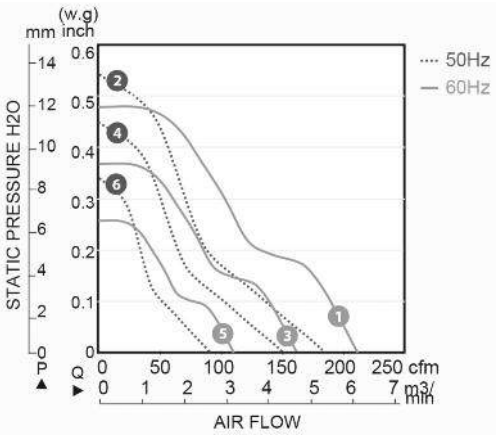

Model Number	Speed (RPM)	Airflow (CFM)	Noise (dB)	Volts AC	Voltage Range	Watts	Max. Static Pressure (“H_2O)	Curves
OA172SAP-11-1 * 1855	2,750 3,100	185 210	58	115	100~120	47 42	0.55 0.49	2 (50Hz) 1 (60Hz)
OA172SAP-11-2 * 1855	2,300 2,400	150 160	48	115	100~120	35 32	0.45 0.38	4 (50Hz) 3 (60Hz)
OA172SAP-11-3 * 1855	1,500 1,600	95 105	35	115	100~120	23 20	0.32 0.26	6 (50Hz) 5 (60Hz)
OA172SAP-22-1 * 1855	2,750 3,100	185 210	58	230	200~240	47 42	0.55 0.49	2 (50Hz) 1 (60Hz)
OA172SAP-22-2 * 1855	2,300 2,400	150 160	48	230	200~240	35 32	0.45 0.38	4 (50Hz) 3 (60Hz)
OA172SAP-22-3 * 1855	1,500 1,600	95 105	35	230	200~240	23 20	0.32 0.26	6 (50Hz) 5 (60Hz)

* Indicate “TB” for terminal type or “WB” for lead wires

Knight Electronics, Inc.
10557 Metric Drive
Dallas, Texas 75243
214-340-0265

RoHS Compliant

Orion Fans
Information and data is subject to change without prior notification.

OA172 Series - All Metal

AC Fan - 115V, 230V
172 x 51mm (6.7" x 2.0")

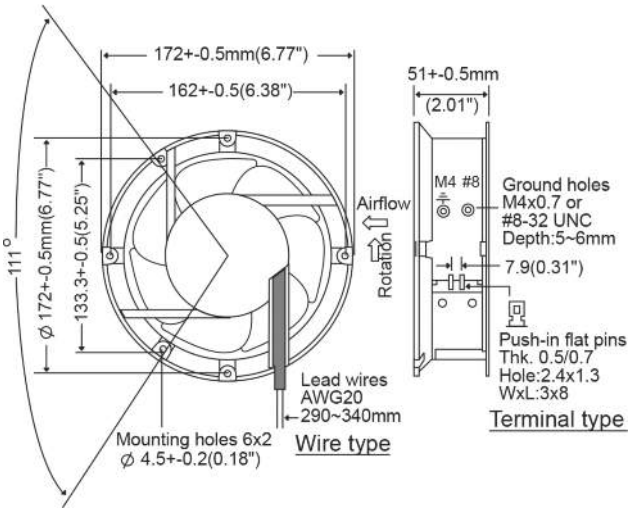

Frame	Diecast Aluminum
Impeller	Metal Alloy
Connection	2x Lead Wires 22 AWG or terminals
Motor	Shaded pole, thermally protected
Bearing System	Dual ball bearing
Insulation Resistance	>100M ohm between lead-wire and frame (500VDC)
Dielectric Strength	1 min at 1,500 VAC, 50/60Hz

Operating Temperature
Ball Bearing
-30C ~ +80C
(non-condensing)
Storage Temp
-40C ~ +100C

Life Expectancy
Ball Bearing
50,000 hours (L10 at 55C)
Environmental Protection
IP55

Weight: ~ 2.98 lbs

m0

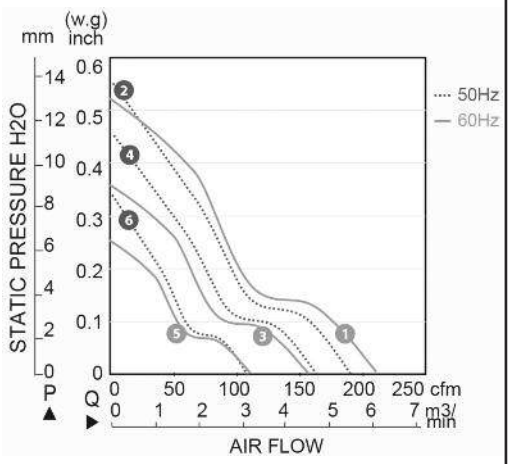

Model Number	Speed (RPM)	Airflow (CFM)	Noise (dB)	Volts AC	Voltage Range	Watts	Max. Static Pressure ("H_2O)	Curves
OA172AP-11-1 * 1855	2,750 3,200	190 215	59	115	100~120	47 42	0.57 0.51	2 (50Hz) 1 (60Hz)
OA172AP-11-2 * 1855	2,350 2,300	162 155	48	115	100~120	35 32	0.46 0.37	4 (50Hz) 3 (60Hz)
OA172AP-11-3 * 1855	1,500 1,600	105 110	36	115	100~120	23 20	0.33 0.27	6 (50Hz) 5 (60Hz)
OA172AP-22-1 * 1855	2,750 3,200	190 215	59	230	200~240	47 42	0.57 0.51	2 (50Hz) 1 (60Hz)
OA172AP-22-2 * 1855	2,350 2,300	162 155	48	230	200~240	35 32	0.46 0.37	4 (50Hz) 3 (60Hz)
OA172AP-22-3 * 1855	1,500 1,600	105 110	36	230	200~240	23 20	0.33 0.27	6 (50Hz) 5 (60Hz)

* Indicate "TB" for terminal type or "WB" for lead wires

Knight Electronics, Inc.
10557 Metric Drive
Dallas, Texas 75243
214-340-0265

RoHS Compliant

Orion Fans
Information and data is subject to change without prior notification.

OA162 Series - All Metal

AC Fan - 115V, 230V
172 x 55mm (6.7" x 2.17")

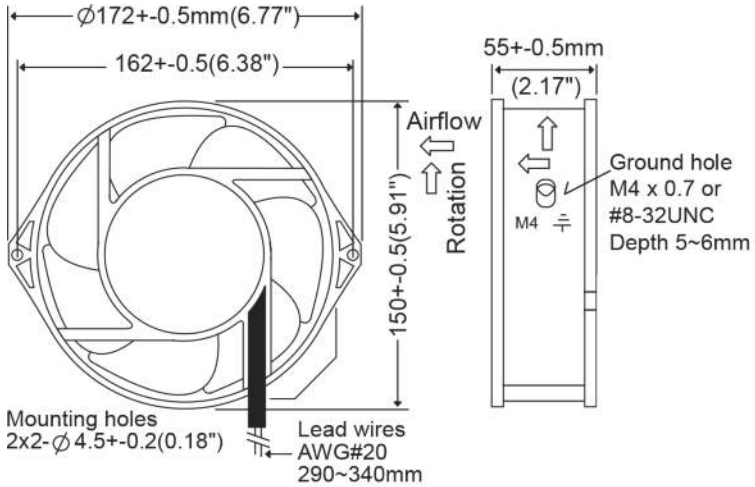

Frame	Diecast Aluminum
Impeller	Metal Alloy
Connection	2x Lead Wires 20 AWG
Motor	Shaded pole, thermally protected
Bearing System	Dual ball bearing
Insulation Resistance	>100M ohm between lead-wire and frame (500VDC)
Dielectric Strength	1 min at 1,500 VAC, 50/60Hz

Operating Temperature
Ball Bearing
-30C ~ +80C
(non-condensing)
Storage Temp
-40C ~ +100C

Life Expectancy
Ball Bearing
50,000 hours (L10 at 55C)
Environmental Protection
IP55

Weight: ~ 2.7 lbs

m0

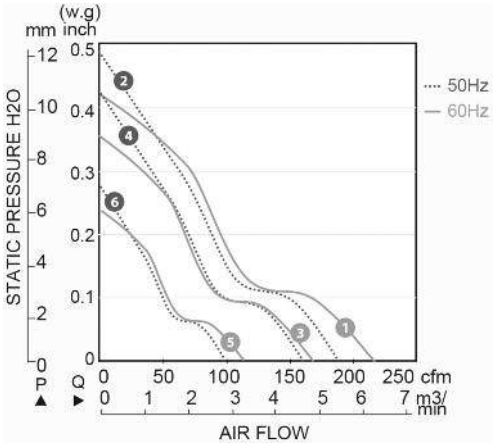

Model Number	Speed (RPM)	Airflow (CFM)	Noise (dB)	Volts AC	Voltage Range	Watts	Max. Static Pressure ("H_2O)	Curves
OA162AP-11-1WB 1855	2,750 3,200	183 210	54	115	100~120	47 42	0.49 0.42	2 (50Hz) 1 (60Hz)
OA162AP-11-2WB 1855	2,400 2,500	160 165	46	115	100~120	35 32	0.42 0.35	4 (50Hz) 3 (60Hz)
OA162AP-11-3WB 1855	1,500 1,600	100 110	35	115	100~120	23 20	0.28 0.22	6 (50Hz) 5 (60Hz)
OA162AP-22-1WB 1855	2,750 3,200	183 210	54	230	200~240	47 42	0.49 0.42	2 (50Hz) 1 (60Hz)
OA162AP-22-2WB 1855	2,400 2,500	160 165	46	230	200~240	35 32	0.42 0.35	4 (50Hz) 3 (60Hz)
OA162AP-22-3WB 1855	1,500 1,600	100 110	35	230	200~240	23 20	0.28 0.22	6 (50Hz) 5 (60Hz)

Knight Electronics, Inc.
10557 Metric Drive
Dallas, Texas 75243
214-340-0265

RoHS Compliant

Orion Fans
Information and data is subject to change without prior notification.

OA180ANL Series - All Metal

AC Fan - 115V, 230V
180 x 65mm (7.1" x 2.6")

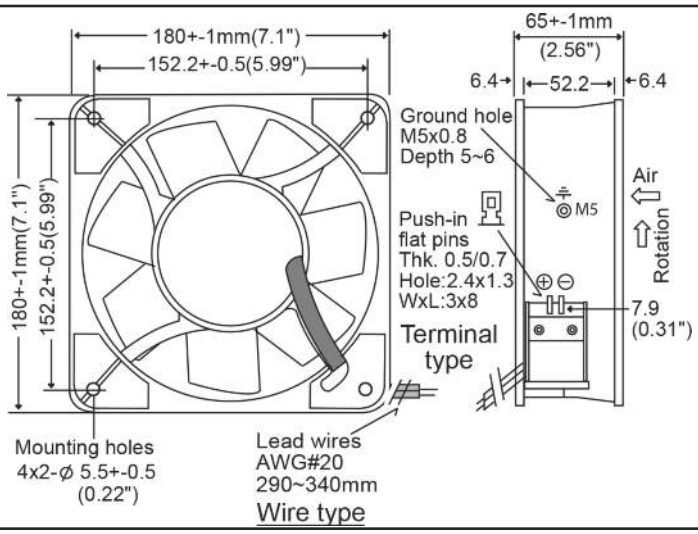

Frame	Diecast Aluminum
Impeller	Metal Alloy
Connection	2x Lead Wires 20 AWG or terminals
Motor	Shaded pole, thermally protected
Bearing System	Dual ball bearing
Insulation Resistance	>100M ohm between lead-wire and frame (500VDC)
Dielectric Strength	1 min at 1,500 VAC, 50/60Hz

Operating Temperature
Ball Bearing
-30C ~ +80C
(non-condensing)
Storage Temp
-40C ~ +100C

Life Expectancy
Ball Bearing
50,000 hours (L10 at 55C)
Environmental Protection
IP56

Weight: ~ 3.75 lbs

m0

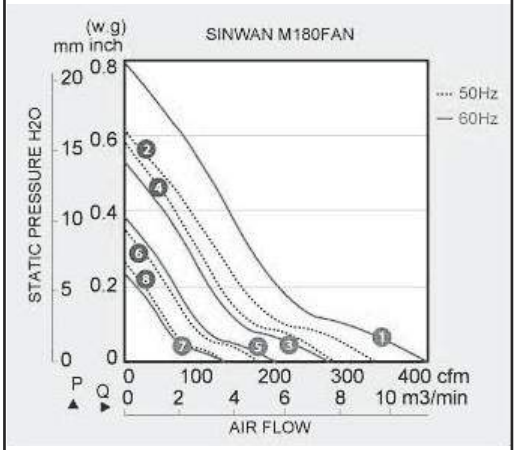

Model Number	Speed (RPM)	Airflow (CFM)	Noise (dB)	Volts AC	Voltage Range	Watts	Max. Static Pressure ("H_2O)	Curves
OA180ANL-11-1 * 1856	2,750 3,250	330 400	65	115	100~120	60 80	0.60 0.80	2 (50Hz) 1 (60Hz)
OA180ANL-11-2 * 1856	2,300 2,200	275 265	53	115	100~120	55 65	0.58 0.52	4 (50Hz) 3 (60Hz)
OA180ANL-11-3 * 1856	1,500 1,600	185 200	42	115	100~120	20 30	0.38 0.32	6 (50Hz) 5 (60Hz)
OA180ANL-22-1 * 1856	2,750 3,250	330 400	65	230	200~240	60 80	0.60 0.80	2 (50Hz) 1 (60Hz)
OA180ANL-22-2 * 1856	2,300 2,200	275 265	53	230	200~240	55 65	0.58 0.52	4 (50Hz) 3 (60Hz)
OA180ANL-22-3 * 1856	1,500 1,600	185 200	42	230	200~240	20 30	0.38 0.32	6 (50Hz) 5 (60Hz)

* Indicate "TB" for terminal type or "WB" for lead wires

Knight Electronics, Inc.
10557 Metric Drive
Dallas, Texas 75243
214-340-0265

RoHS Compliant

Orion Fans
Information and data is subject to change without prior notification.

OA180AN Series - All Metal

AC Fan - 115V, 230V
176 x 89mm (6.9” x 3.5”)

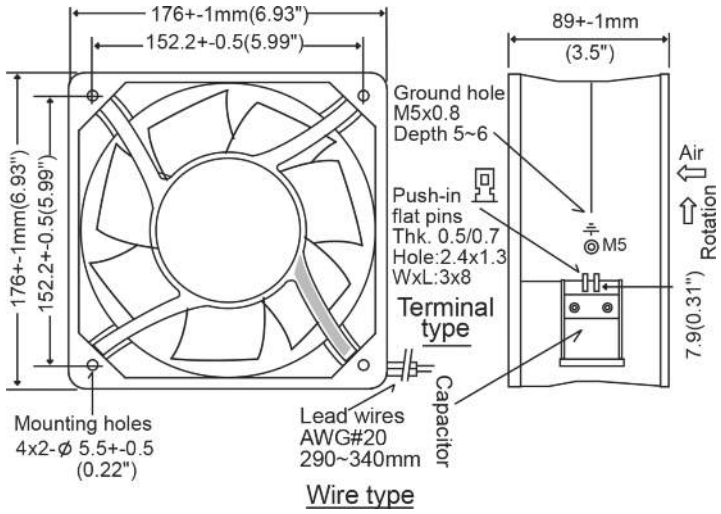

Frame	Diecast Aluminum
Impeller	Metal Alloy
Connection	2x Lead Wires 20 AWG or terminals
Motor	AC Capacitor Inductance, thermally protected
Bearing System	Dual ball bearing
Insulation Resistance	>100M ohm between lead-wire and frame (500VDC)
Dielectric Strength	1 min at 1,500 VAC, 50/60Hz

Operating Temperature
Ball Bearing
-30C ~ +80C
(non-condensing)
Storage Temp
-40C ~ +100C

Life Expectancy
Ball Bearing
50,000 hours (L10 at 55C)
Environmental Protection
IP56

Weight: ~ 4.1 lbs

m0

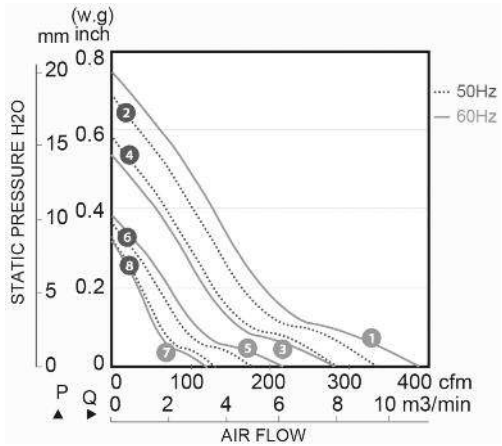

Model Number	Speed (RPM)	Airflow (CFM)	Noise (dB)	Volts AC	Voltage Range	Watts	Max. Static Pressure (“H_2O)	Curves
OA180AN-11-1 * 1856	2,750 3,250	330 380	63	115	100~120	45 50	0.69 0.76	2 (50Hz) 1 (60Hz)
OA180AN-11-2 * 1856	2,350 2,250	285 275	52	115	100~120	30 35	0.59 0.53	4 (50Hz) 3 (60Hz)
OA180AN-11-3 * 1856	1,450 1,650	175 210	41	115	100~120	21 23	0.36 0.39	6 (50Hz) 5 (60Hz)
OA180AN-22-1 * 1856	2,750 3,250	330 380	63	230	200~240	45 50	0.69 0.76	2 (50Hz) 1 (60Hz)
OA180AN-22-2 * 1856	2,350 2,250	285 275	52	230	200~240	30 35	0.59 0.53	4 (50Hz) 3 (60Hz)
OA180AN-22-3 * 1856	1,450 1,650	175 210	41	230	200~240	21 23	0.36 0.39	6 (50Hz) 5 (60Hz)

* Indicate “TB” for terminal type or “WB” for lead wires

Knight Electronics, Inc.
10557 Metric Drive
Dallas, Texas 75243
214-340-0265

RoHS Compliant

Orion Fans
Information and data is subject to change without prior notification.

OA200AN Series - All Metal

AC Fan - 115V, 230V
200 x 70mm (7.8" x 2.8")

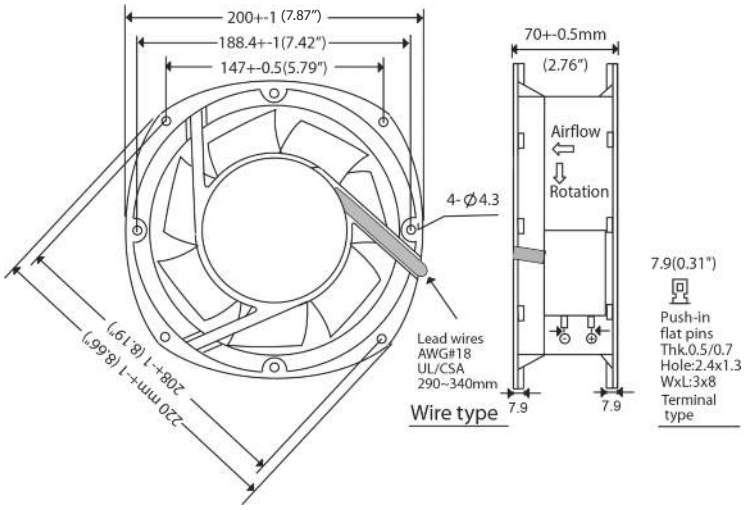

Frame	Diecast Aluminum
Impeller	Metal Alloy
Connection	2x Lead Wires 18 AWG or terminals
Motor	AC Capacitor Inductance, thermally protected
Bearing System	Dual ball bearing
Insulation Resistance	>100M ohm between lead-wire and frame (500VDC)
Dielectric Strength	1 min at 1,500 VAC, 50/60Hz

Operating Temperature
Ball Bearing
-30C ~ +80C
(non-condensing)
Storage Temp
-40C ~ +100C

Life Expectancy
Ball Bearing
50,000 hours (L10 at 55C)
Environmental Protection
IP56

Weight: ~ 4.0 lbs

m0

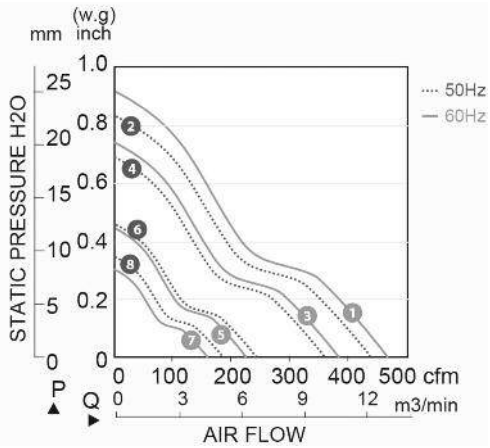

Model Number	Speed (RPM)	Airflow (CFM)	Noise (dB)	Volts AC	Voltage Range	Watts	Max. Static Pressure ("H_2O)	Curves
OA200AN-11-1 * 1856	2,800 3,300	430 485	68	115	100~120	95 105	0.82 0.93	2 (50Hz) 1 (60Hz)
OA200AN-11-2 * 1856	2,400 2,600	365 395	54	115	100~120	80 95	0.68 0.75	4 (50Hz) 3 (60Hz)
OA200AN-11-3 * 1856	1,600 1,500	245 230	43	115	100~120	32 40	0.46 0.42	6 (50Hz) 5 (60Hz)
OA200AN-22-1 * 1856	2,800 3,300	430 485	68	230	200~240	95 105	0.82 0.93	2 (50Hz) 1 (60Hz)
OA200AN-22-2 * 1856	2,400 2,600	365 395	54	230	200~240	80 95	0.68 0.75	4 (50Hz) 3 (60Hz)
OA200AN-22-3 * 1856	1,600 1,500	245 230	43	230	200~240	32 40	0.46 0.42	6 (50Hz) 5 (60Hz)

* Indicate "TB" for terminal type or "WB" for lead wires

Knight Electronics, Inc.
10557 Metric Drive
Dallas, Texas 75243
214-340-0265

RoHS Compliant

Orion Fans
Information and data is subject to change without prior notification.

OA205AN Series - All Metal

AC Fan - 115V, 230V
205 x 72mm (8.0" x 2.8")

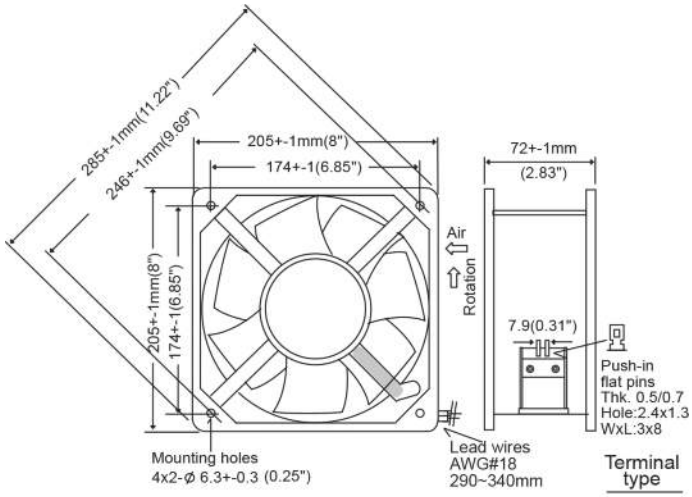

Frame	Diecast Aluminum
Impeller	Metal Alloy
Connection	2x Lead Wires 18 AWG or terminals
Motor	AC Capacitor Inductance, thermally protected
Bearing System	Dual ball bearing
Insulation Resistance	>100M ohm between lead-wire and frame (500VDC)
Dielectric Strength	1 min at 1,500 VAC, 50/60Hz

Operating Temperature
Ball Bearing
-30C ~ +80C
(non-condensing)
Storage Temp
-40C ~ +100C

Life Expectancy
Ball Bearing
50,000 hours (L10 at 55C)
Environmental Protection
IP56

Weight: ~ 5.0 lbs

m0

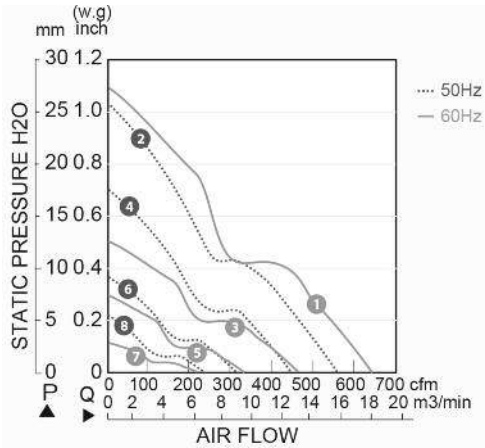

Model Number	Speed (RPM)	Airflow (CFM)	Noise (dB)	Volts AC	Voltage Range	Watts	Max. Static Pressure ("H_2O)	Curves
OA205AN-11-1 * 1856	2,800 3,200	550 650	68	115	100~120	95 105	1.05 1.08	2 (50Hz) 1 (60Hz)
OA205AN-11-2 * 1856	2,300 2,250	460 465	58	115	100~120	55 65	0.69 0.52	4 (50Hz) 3 (60Hz)
OA205AN-11-3 * 1856	1,500 1,650	310 330	48	115	100~120	32 40	0.38 0.29	6 (50Hz) 5 (60Hz)
OA205AN-22-1 * 1856	2,800 3,200	550 650	68	230	200~240	95 105	1.05 1.08	2 (50Hz) 1 (60Hz)
OA205AN-22-2 * 1856	2,300 2,250	460 465	58	230	200~240	55 65	0.69 0.52	4 (50Hz) 3 (60Hz)
OA205AN-22-3 * 1856	1,500 1,650	310 330	48	230	200~240	32 40	0.38 0.29	6 (50Hz) 5 (60Hz)

* Indicate "TB" for terminal type or "WB" for lead wires

OA2543 Series - All Metal

AC Fan - 115V, 230V
254 x 89mm (10.0" x 3.5")

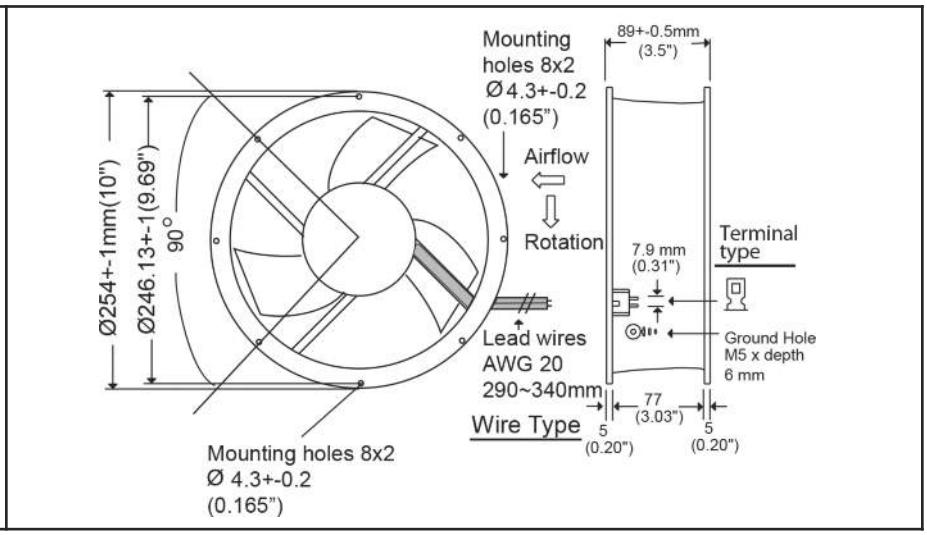

Frame	Diecast Aluminum
Impeller	Metal Alloy
Connection	2x Lead Wires 20 AWG or terminals
Motor	AC Capacitor Induction, thermally protected
Bearing System	Dual ball bearing
Insulation Resistance	>100M ohm between lead-wire and frame (500VDC)
Dielectric Strength	1 min at 1,500 VAC, 50/60Hz

Operating Temperature
Ball Bearing
-30C ~ +80C
(non-condensing)
Storage Temp
-40C ~ +100C

Life Expectancy
Ball Bearing
50,000 hours (L10 at 55C)
Environmental Protection
IP56

Weight: ~ 4.7 lbs

m0

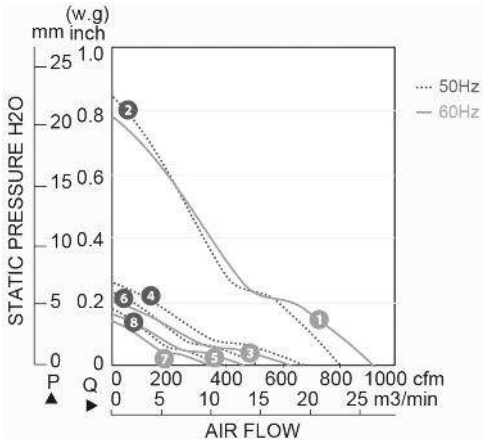

Model Number	Speed (RPM)	Airflow (CFM)	Noise (dB)	Volts AC	Voltage Range	Watts	Max. Static Pressure ("H_2O)	Curves
OA2543AN-11-1 * 1856	2,800 3,300	800 930	66	115	100~120	95 105	0.84 0.78	2 (50Hz) 1 (60Hz)
OA2543AN-11-2 * 1856	2,300 2,000	670 615	53	115	100~120	80 95	0.25 0.20	4 (50Hz) 3 (60Hz)
OA2543AN-11-3 * 1856	1,650 1,500	510 460	48	115	100~120	32 40	0.22 0.17	6 (50Hz) 5 (60Hz)
OA2543AN-22-1 * 1856	2,800 3,300	800 930	66	230	200~240	95 105	0.84 0.78	2 (50Hz) 1 (60Hz)
OA2543AN-22-2 * 1856	2,300 2,000	670 615	53	230	200~240	80 95	0.25 0.20	4 (50Hz) 3 (60Hz)
OA2543AN-22-3 * 1856	1,650 1,500	510 460	48	230	200~240	32 40	0.22 0.17	6 (50Hz) 5 (60Hz)

* Indicate "TB" for terminal type or "WB" for lead wires

OA2547 Series - All Metal

AC Fan - 115V, 230V
254 x 89mm (10.0" x 3.5")

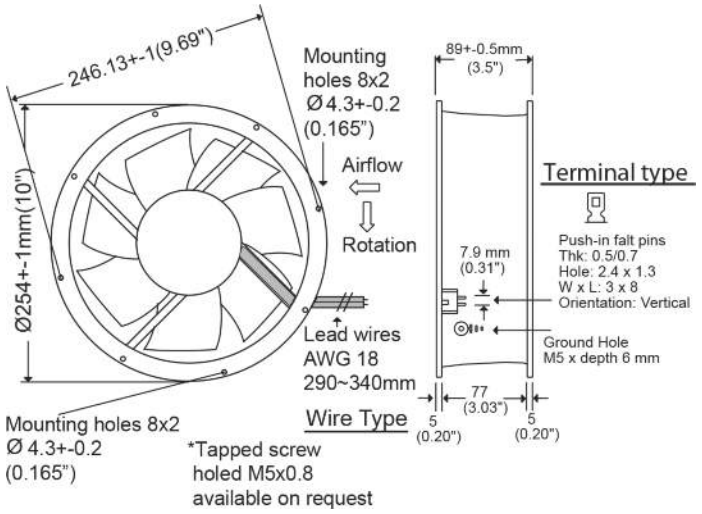

Frame	Diecast Aluminum
Impeller	Metal Alloy
Connection	2x Lead Wires 18 AWG or terminals
Motor	AC Capacitor Induction, thermally protected
Bearing System	Dual ball bearing
Insulation Resistance	>100M ohm between lead-wire and frame (500VDC)
Dielectric Strength	1 min at 1,500 VAC, 50/60Hz

Operating Temperature
Ball Bearing
-30C ~ +80C
(non-condensing)
Storage Temp
-40C ~ +100C

Life Expectancy
Ball Bearing
50,000 hours (L10 at 55C)
Environmental Protection
IP56

Weight: ~ 5.9 lbs

m0

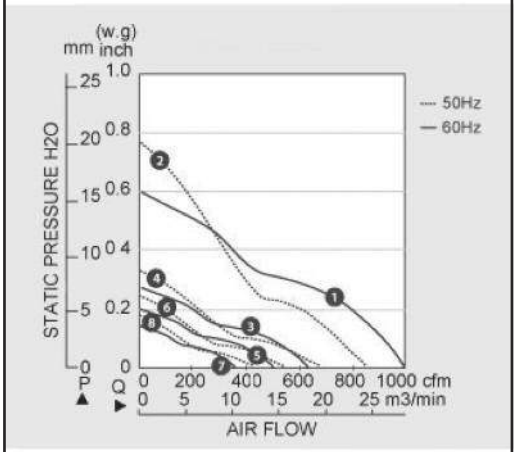

Model Number	Speed (RPM)	Airflow (CFM)	Noise (dB)	Volts AC	Voltage Range	Watts	Max. Static Pressure ("H_2O)	Curves
OA2547AN-11-1 * 1856	2,800 3,250	840 1,000	70	115	100~120	95 105	0.78 0.60	2 (50Hz) 1 (60Hz)
OA2547AN-11-2 * 1856	2,300 2,200	660 620	63	115	100~120	80 95	0.33 0.27	4 (50Hz) 3 (60Hz)
OA2547AN-11-3 * 1856	1,600 1,500	560 500	46	115	100~120	32 40	0.25 0.20	6 (50Hz) 5 (60Hz)
OA2547AN-22-1 * 1856	2,800 3,250	840 1,000	70	230	200~240	95 105	0.78 0.60	2 (50Hz) 1 (60Hz)
OA2547AN-22-2 * 1856	2,300 2,200	660 620	63	230	200~240	80 95	0.33 0.27	4 (50Hz) 3 (60Hz)
OA2547AN-22-3 * 1856	1,600 1,500	560 500	46	230	200~240	32 40	0.25 0.20	6 (50Hz) 5 (60Hz)

* Indicate "TB" for terminal type or "WB" for lead wires

Knight Electronics, Inc.
10557 Metric Drive
Dallas, Texas 75243
214-340-0265

RoHS Compliant

Orion Fans
Information and data is subject to change without prior notification.

OA109LFG Series

Louvered Fan Guard Kit
with Fan Installed
AC Fan - 115V, 230V

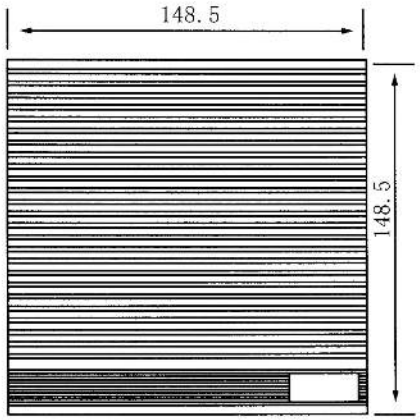

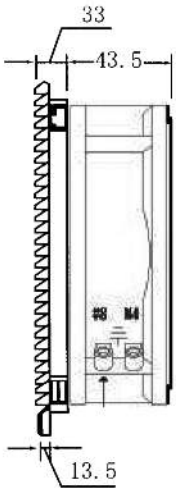

Frame	Diecast Aluminum
Impeller	PBT, UL94V-0 plastic
Connection	Terminals
Motor	AC shaded pole, impedance protected
Bearing System	Dual Ball
Insulation Resistance	>100M ohm between leadwire and frame (500VDC)
Dielectric Strength	1 min at 1,500 VAC, 50/60Hz

Operating Temperature
-20C ~ +70C
Storage Temp
-30C ~ +80C
Life Expectancy
>40,000 hours (L10, 40C)

Environmental:
Class B Insulation
Rated IP55 Fan
Rated IP54 Guard
Guard Frame: ABS Resin UL94V-0
Color: Black (standard) or Gray
Filter Mesh: Nylon fiber
Synthetic Resin

m2

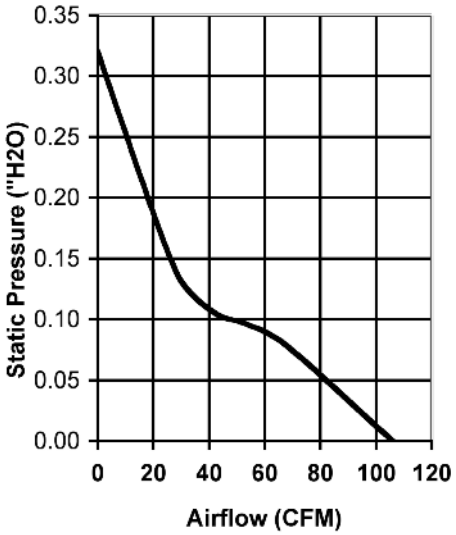

Model Number	OA109LFG111T	OA109LFG221T
Nominal Voltage	115 VAC	230 VAC
Nominal Current	0.16 A	0.08 A (locked 0.12 A)
Rated Power	12 W (60Hz)	15 W (60Hz)
Rated Speed (RPM)	3,100	3,100
Airflow (CFM)	106	106
Noise Level (dB)	46	46
Max. Static Pressure	0.32" H_2O	0.32" H_2O

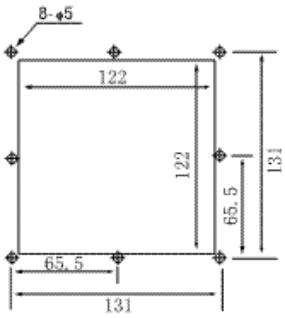

PANEL CUTOUT

* Note: Airflow data is for the fan without the louvered filter attached. Calculations indicate that up to a 40% reduction (~ 67 CFM) in fan airflow is possible with LFG unit installed.

Knight Electronics, Inc.
10557 Metric Drive
Dallas, Texas 75243
214-340-0265

RoHS Compliant

Orion Fans
Information and data is subject to change without prior notification.

OA172LFG Series

Louvered Fan Guard Kit
with Fan Installed
AC Fan - 115V, 230V

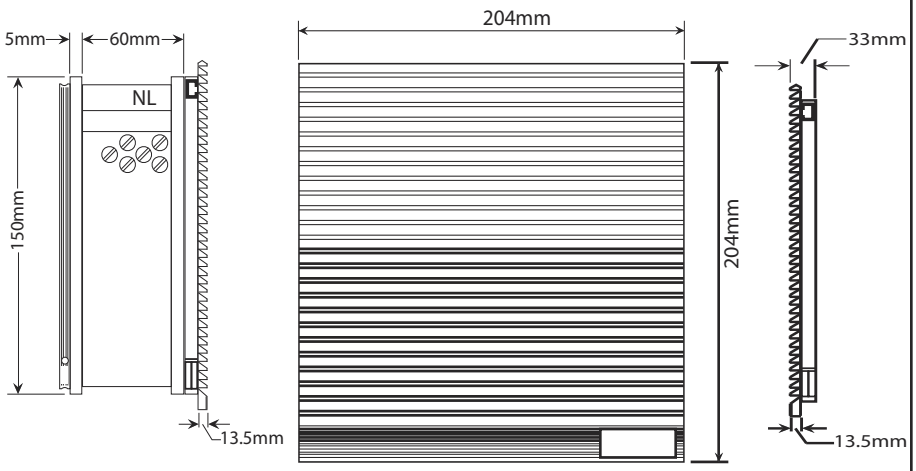

Frame	Diecast Aluminum
Impeller	PBT, UL94V-0 plastic
Connection	2x Lead Wires or Terminals
Motor	Capacitor drive, impedance protected
Bearing System	Dual ball
Insulation Resistance	>100M ohm between lead-wire and frame (500VDC)
Dielectric Strength	1 min at 1,500 VAC, 50/60Hz

Operating Temperature
Ball Bearing
-40C ~ +70C
Storage Temp
-30C ~ +80C
Life Expectancy
Ball Bearing
60,000 hours (L10 at 40C)
Environmental:
Class B Insulation
Rated IP54 Guard
Guard Frame: ABS Resin UL94V-0
Color: Black (standard) or Gray
Filter Mesh: Nylon fiber
Synthetic Resin

m2

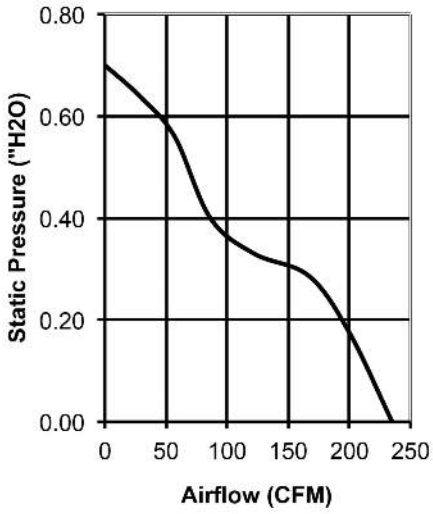

Model Number	OA172LFG111T	OA172LFG221T
Nominal Voltage	115 VAC	230 VAC
Voltage Range	80 ~ 130 VAC	160 ~ 260 VAC
Rated Power	35 W	35 W
Rated Speed (RPM)	3,200	3,200
Airflow (CFM)	235	235
Noise Level (dB)	52	52
Max. Static Pressure	0.70" H_2O	0.70" H_2O

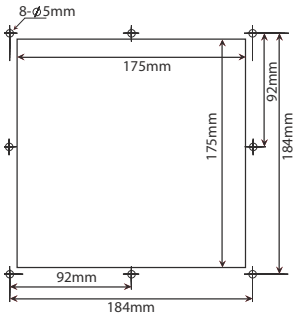

PANEL CUTOUT

* Note: Airflow data is for the fan without the louvered filter attached. Calculations indicate that up to a 40% reduction (~ 141 CFM) in fan airflow is possible with LFG unit installed.

Knight Electronics, Inc.
10557 Metric Drive
Dallas, Texas 75243
214-340-0265

RoHS Compliant

Orion Fans
Information and data is subject to change without prior notification.

OA172LFG XC Series

Louvered Fan Guard Kit
with Fan Installed
AC Fan - 115V, 230V

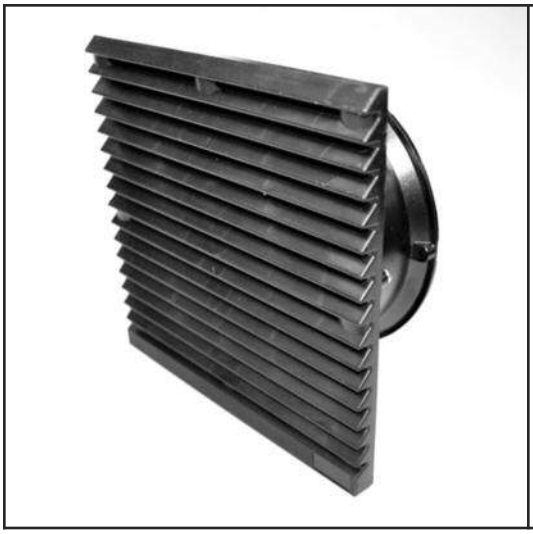

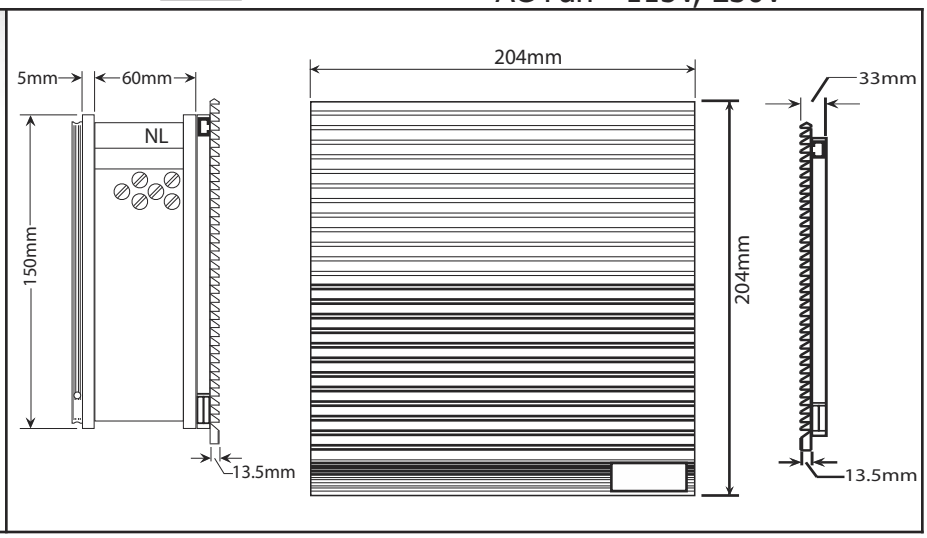

Frame	Diecast Aluminum
Impeller	PBT, UL94V-0 plastic
Connection	2x Lead Wires or Terminals
Motor	Capacitor drive, impedance protected
Bearing System	Dual ball
Insulation Resistance	>100M ohm between lead-wire and frame (500VDC)
Dielectric Strength	1 min at 1,500 VAC, 50/60Hz

Operating Temperature
Ball Bearing
-20C ~ +70C
Storage Temp
-30C ~ +80C
Life Expectancy
Ball Bearing
60,000 hours (L10 at 40C)
Environmental:
Class B Insulation
Rated IP54 Guard
Guard Frame: ABS Resin UL94V-0
Color: Black (standard) or Gray
Filter Mesh: Nylon fiber
Synthetic Resin

m0

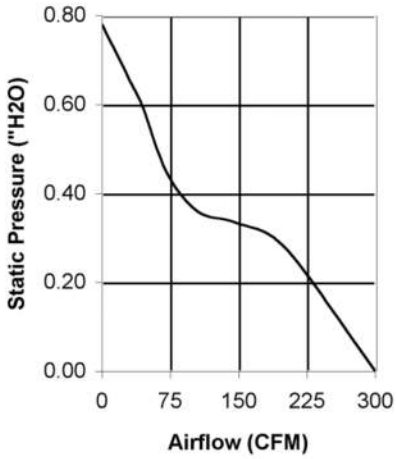

Part Number	OA172LFG111TXC	OA172LFG221TXC
Nominal Voltage	115 VAC	230 VAC
Voltage Range	100 ~ 125 VAC	200 ~ 240 VAC
Rated Power	50 W (60Hz)	50 W (60Hz)
Rated Speed (RPM)	3,300	3,300
Airflow (CFM)	300	300
Noise Level (dB)	61	61
Max. Static Pressure	0.78" H_2O	0.78" H_2O

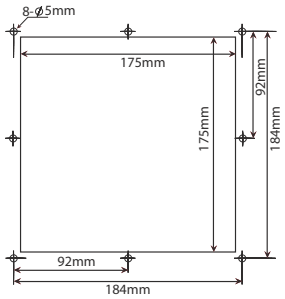

PANEL CUTOUT

* Note: Airflow data is for the fan without the louvered filter attached. Calculations indicate that up to a 40% reduction (~ 180 CFM) in fan airflow is possible with LFG unit installed.

Knight Electronics, Inc.
10557 Metric Drive
Dallas, Texas 75243
214-340-0265

RoHS Compliant

Orion Fans
Information and data is subject to change without prior notification.

OA225LFG Series

Louvered Fan Guard Kit
with Fan Installed
AC Fan - 115V, 230V

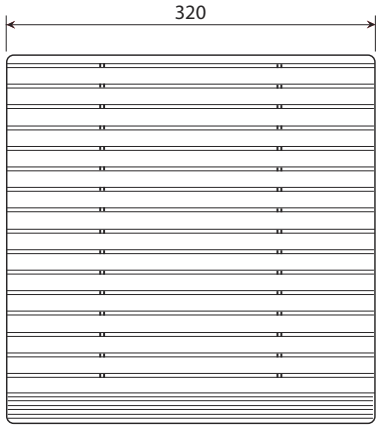

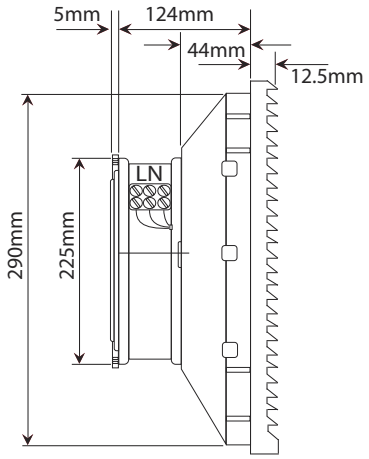

Frame	Diecast Aluminum
Impeller	Metal
Connection	Terminal Block, 18AWG
Motor	Capacitor drive, thermally protected
Bearing System	Dual ball
Insulation	Class F
Dielectric Strength	1 min at 1,500 VAC, 50/60Hz

Operating Temperature
Ball Bearing
-40C ~ +80C
Storage Temp
-40C ~ +100C
Life Expectancy
Ball Bearing
40,000 hours (L10 at 40C)
Environmental:
IP55 Rated Fan
IP54 Rated Guard

Guard Frame: ABS Resin UL94V-0
Color: Black (standard) or Gray (shown)
Filter Mesh: Nylon fiber
Synthetic Resin

m2

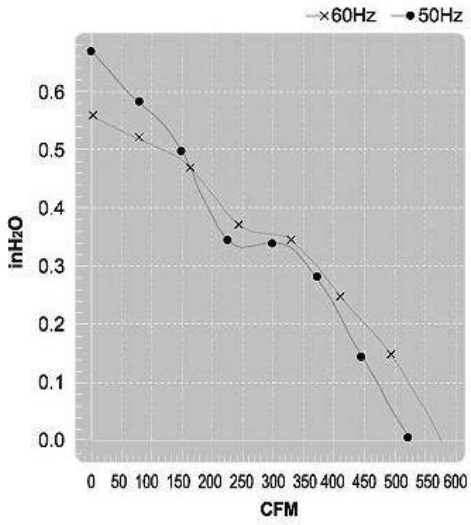

Part Number	OA225LFG111T	OA225LFG221T
Nominal Voltage	115VAC	230VAC
Voltage Range	100 ~ 125VAC	200 ~ 240VAC
Rated Power	65 / 72 W	74 / 80 W
Nominal Current	0.58 / 0.70 A	0.29 / 0.35 A
Rated Speed (RPM) 50/60Hz	2,550 / 2,800	2,550 / 2,800
Airflow (CFM) 50/60Hz	530 / 600	530 / 600 *
Noise Level (dB) 50/60HZ	59 / 61	59 / 61
Max. Static Pressure 50/60Hz	0.67” / 0.55” H_2O	0.67” / 0.55” H_2O

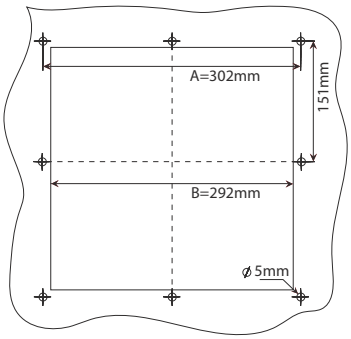

PANEL CUTOUT

* Note: Airflow data is for the fan without the louvered filter attached. Calculations indicate that up to a 40% reduction (~ 318 / ~ 360 CFM) in fan airflow is possible with LFG unit installed.

Knight Electronics, Inc.
10557 Metric Drive
Dallas, Texas 75243
214-340-0265

RoHS Compliant

Orion Fans
Information and data is subject to change without prior notification.

OA254LFG Series

Louvered Fan Guard Kit
with Fan Installed
AC Fan - 115V, 230V

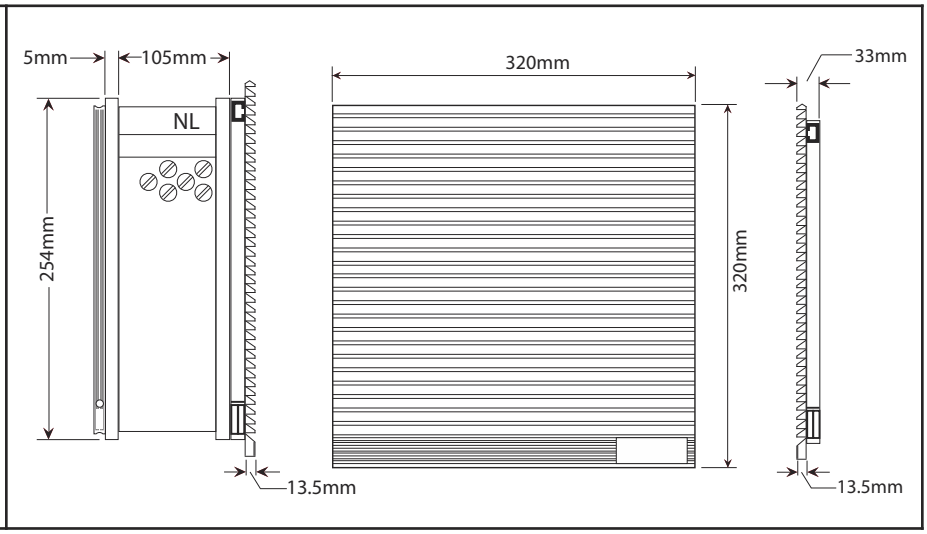

Frame	Diecast Aluminum
Impeller	PBT, UL94V-0 plastic
Connection	2x Lead Wires or Terminals
Motor	Capacitor drive, thermally protected
Bearing System	Dual ball
Insulation Resistance	>100M ohm between lead-wire and frame (500VDC)
Dielectric Strength	1 min at 1,500 VAC, 50/60Hz

Operating Temperature
Ball Bearing
-20C ~ +80C
Storage Temp
-30C ~ +80C
Life Expectancy
Ball Bearing
60,000 hours (L10 at 40C)
Environmental:
Class B Insulation
Rated IP54 Guard
Guard Frame: ABS Resin UL94V-0
Color: Black (standard) or Gray
Filter Mesh: Nylon fiber
Synthetic Resin

m2

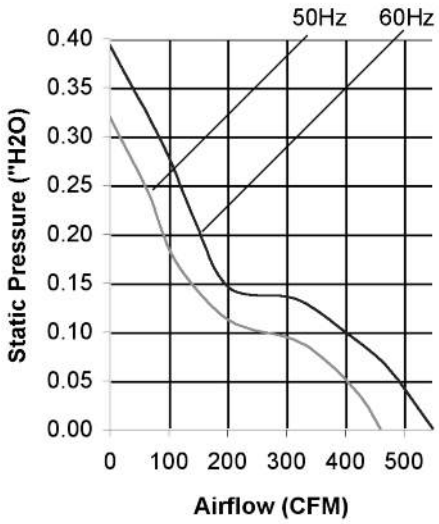

Part Number	OA254LFG111T	OA254LFG221T
Nominal Voltage (50/60 Hz)	115VAC	230VAC
Voltage Range	80 ~ 130VAC	160 ~ 260VAC
Rated Power	31/33 W (0.30 / 0.29 A)	31/33 W (0.14 / 0.14 A)
Rated Speed	1,400 / 1,650	1,400 / 1,650
Airflow - CFM	460 / 547	460 / 547
Noise Level - dB	52 / 55	52 / 55
Max. Static Pressure	0.32" / 0.39" H_2O	0.32" / 0.39" H_2O

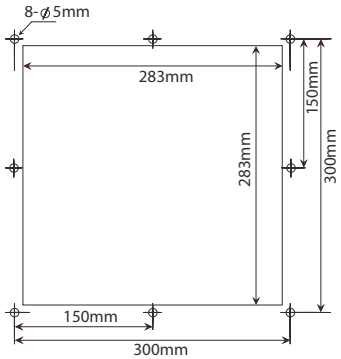

PANEL CUTOUT

* Note: Airflow data is for the fan without the louvered filter attached. Calculations indicate that up to a 40% reduction (~ 276 / 328 CFM) in fan airflow is possible with LFG unit installed.

Knight Electronics, Inc.
10557 Metric Drive
Dallas, Texas 75243
214-340-0265

RoHS Compliant

Orion Fans
Information and data is subject to change without prior notification.

OA254LFG XC Series

Louvered Fan Guard Kit
with Fan Installed
AC Fan - 115V, 230V

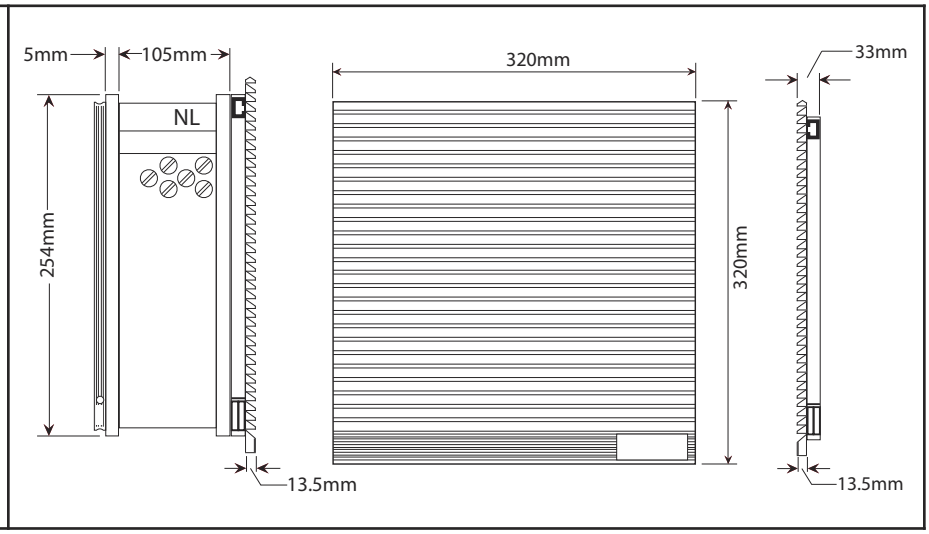

Frame	Diecast Aluminum
Impeller	PBT, UL94V-0 plastic
Connection	2x Lead Wires or Terminals
Motor	Capacitor drive, impedance protected
Bearing System	Dual ball
Insulation Resistance	>100M ohm between lead-wire and frame (500VDC)
Dielectric Strength	1 min at 1,500 VAC, 50/60Hz

Operating Temperature
Ball Bearing
-40C ~ +70C
Storage Temp
-40C ~ +80C
Life Expectancy
Ball Bearing
60,000 hours (L10 at 40C)
Environmental:
Class B Insulation
Rated IP54 Guard
Guard Frame: ABS Resin UL94V-0
Color: Black (standard) or Gray
Filter Mesh: Nylon fiber
Synthetic Resin

m0

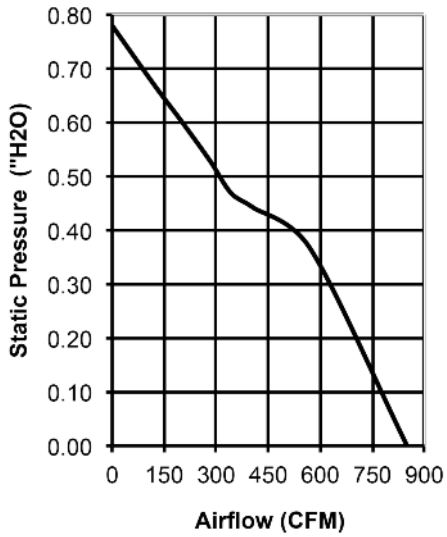

Model Number	OA254LFG111TXC	OA254LFG221TXC
Nominal Voltage	115 VAC	230 VAC
Voltage Range	80 ~ 130	160 ~ 260
Rated Power	75	75
Rated Speed (RPM)	2,700	2,700
Airflow (CFM)	850	850
Noise Level (dB)	69	69
Max. Static Pressure	0.78" H_2O	0.78" H_2O

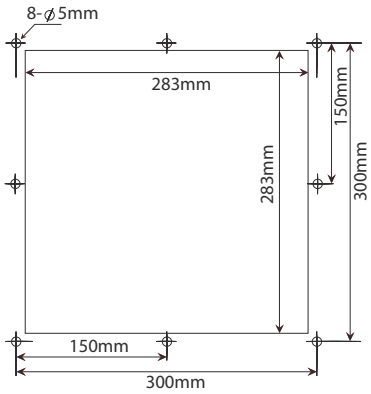

PANEL CUTOUT

* Note: Airflow data is for the fan without the louvered filter attached. Calculations indicate that up to a 40% reduction (~ 510 CFM) in fan airflow is possible with LFG unit installed.

Knight Electronics, Inc.
10557 Metric Drive
Dallas, Texas 75243
214-340-0265

RoHS Compliant

Orion Fans
Information and data is subject to change without prior notification.

OA280LFG111T

Louvered Fan Guard Kit
with Fan Installed
AC Fan - 115V, 230V

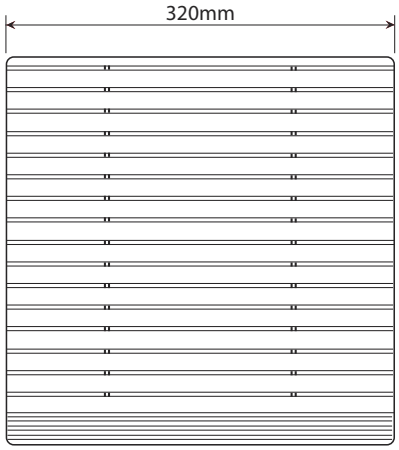

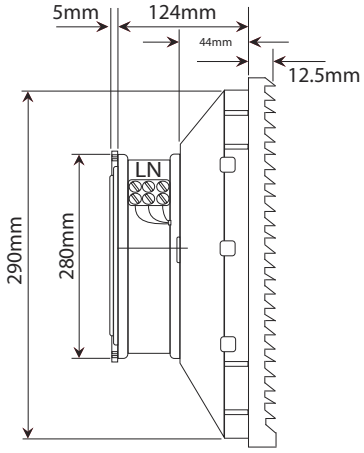

Frame	Diecast Aluminum
Impeller	Metal
Connection	Terminal Block, 18AWG
Motor	Capacitor drive, thermally protected
Bearing System	Dual ball
Insulation	Class F
Dielectric Strength	1 min at 1,500 VAC, 50/60Hz

Operating Temperature
Ball Bearing
-40C ~ +60C
Storage Temp
-40C ~ +80C
Life Expectancy
Ball Bearing
40,000 hours (L10 at 40C)

Environmental:
IP55 Rated Fan
IP54 Rated Guard

Guard Frame: ABS Resin UL94V-0
Color: Black (standard) or Gray (shown)
Filter Mesh: Nylon fiber
Synthetic Resin
m2

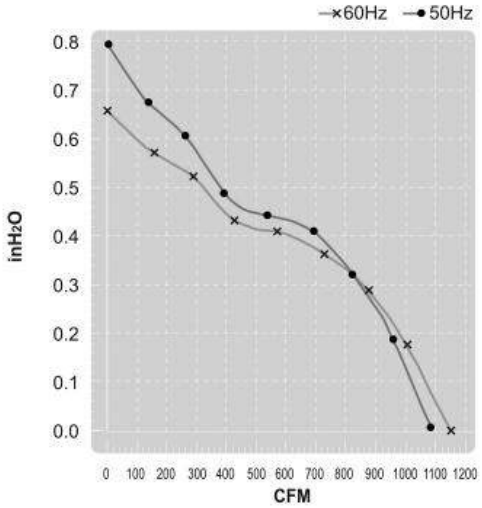

Part Number	OA280LFG111T	OA280LFG221T
Nominal Voltage	115VAC	230VAC
Voltage Range	100 ~ 125VAC	200 ~ 240VAC
Rated Power	112 / 148 W	119 / 158 W
Nominal Current	1.0 / 1.5 A	0.59 / 0.82 A
Rated Speed (RPM) 50/60Hz	2,550 / 2,700	2,550 / 2,700
Airflow (CFM) 50/60Hz	1,190 / 1,130 *	1,190 / 1,130 *
Noise Level (dB) 50/60HZ	68 / 70	68 / 70
Max. Static Pressure 50/60Hz	0.78” / 0.65” H_2O	0.78” / 0.65” H_2O

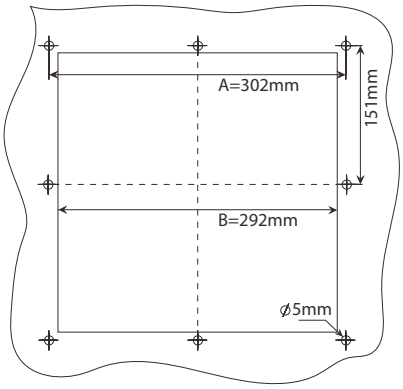

PANEL CUTOUT

* Note: Airflow data is for the fan without the louvered filter attached. Calculations indicate that up to a 40% reduction (~ 318 / ~ 360 CFM) in fan airflow is possible with LFG unit installed.

Knight Electronics, Inc.
10557 Metric Drive
Dallas, Texas 75243
214-340-0265

RoHS Compliant

Orion Fans
Information and data is subject to change without prior notification.

OA109 Temperature Control

AC Fan - 115V, 230V
120 x 38mm (4.7″ x 1.5″)

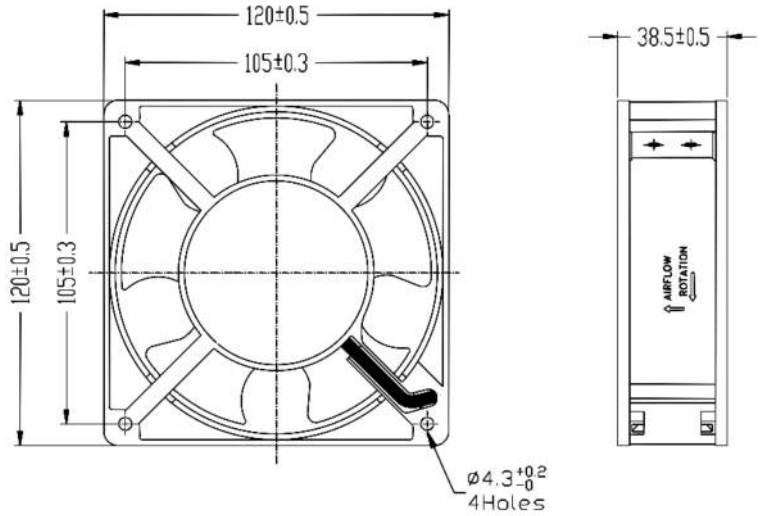

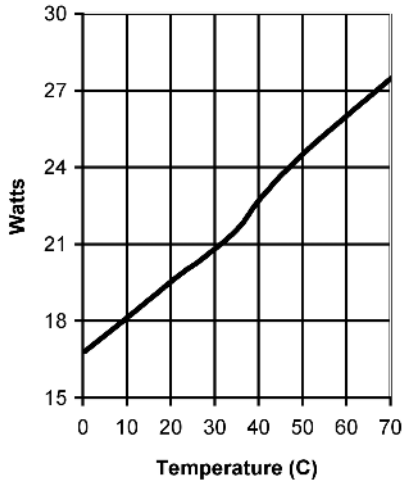

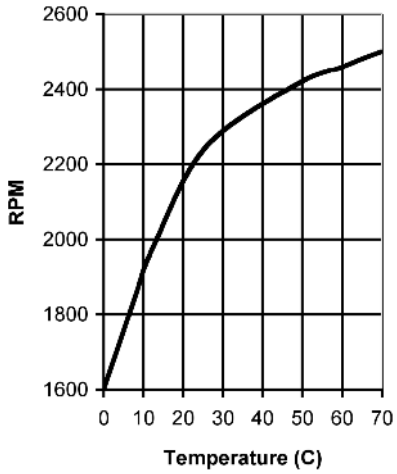

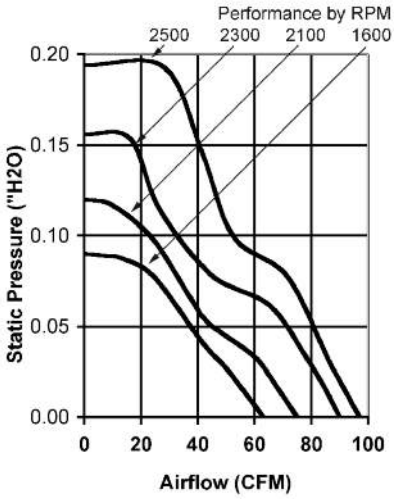

Part Number	OA109AP-11-1TB03	OA109AP-22-1TB03
Frame	Aluminum Alloy	
Impeller	PBT, UL94V-0 plastic	
Connection	Terminal	Terminal
Motor	AC shaded pole, impedance overload protected	
Bearing System	Dual ball	Dual Ball
Insulation Resistance	>100M ohm between leadwire and frame (500VDC)	
Dielectric Strength	1 min at 1,500 VAC, 50/60Hz	
Nominal Voltage	115 VAC (60Hz)	230 VAC (60Hz)
Nominal Current (0C ~ 70C)	0.20 ~ 0.25 A	0.07 ~ 0.12 A
Rated Power (0C ~ 70C)	16 ~ 27.6 W	8 ~ 19.5 W
Rated Speed (RPM) (0C ~ 70C)	1,600 ~ 2,500	1,600 ~ 2,500
Airflow (CFM)	63 ~ 97	63 ~ 97
Noise Level (dB)	37 ~ 45	37 ~ 45
Operating Temperature	-10C ~ +70C	
Life Expectancy	60,000 hours L10 @ 40C	

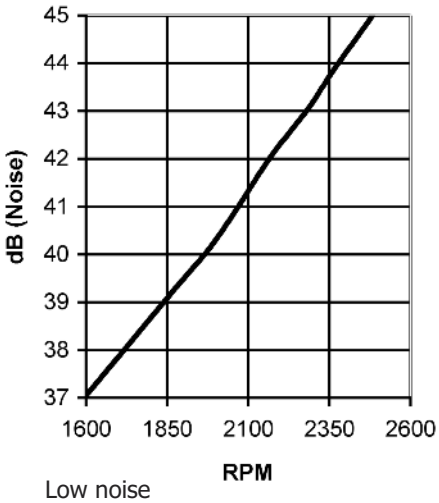

Low noise
Low power consumption
Ultra Low speed operation

OPTIONS
Automatic thermal control, hub mounted or lead mounted
Manual Speed Control

m1

Knight Electronics, Inc.
10557 Metric Drive
Dallas, Texas 75243
214-340-0265

RoHS Compliant

Orion Fans
Information and data is subject to change without prior notification.

Spot Cooling

Complete Kit	**OD1232-SPOT / DIN** Includes: 120x32mm Fan DIN rail DIN mount fan bracket Mounting screws 2 fan guards Power adaptor with 6′ cord Automotive grade, double-sided, mount anywhere tape
Spot Cooler Only	**OD1232-SPOT** Includes: 120x32mm Fan 1 fan guard Power adaptor with 6′ cord
Fan ID	OD1232-12HB-03
VOLTAGE INPUT	120VAC / 60Hz
INPUT POWER	19 Watts
DC Nominal Current	0.60 A
DC Locked Current	0.05 A
Rated Speed (RPM)	1,600 ~ 3,750
Airflow *	65CFM @ 25C / 120CFM @ 40C
Noise Level (dB)	20 ~ 47
Max. Static Pressure	0.43” H_2O
Bearing System	Dual Ball
Frame & Impeller	PBT, UL94V-0 plastic
Motor	Brushless DC, auto restart, polarity protected. Thermal Control.
Bearing System	Dual ball bearing
Insulation Resistance	10M ohm between leadwire and frame (500VDC)
Dielectric Strength	5mA max at 1,500VAC for 1 minute between the leadwire and frame
Operation Temperature	-10C ~ +70C
Life (L10)	60,000 hours
Storage Temperature	-20C~+80C

Extend the Life of Your Equipment

Thermal Speed Control
Airflow Range

65 CFM at 25C
120 CFM at 40C

Energy Saving Solution for your Green Initiative

Clips to standard DIN rail

Plugs into any 115VAC power source

OD1232-SPOT / DIN

Part Number - 124141794
120x32mm
Thermally controlled Fan *
6′ Cord with adaptor
2 guards (1 installed)
DIN rail
DIN mount fan bracket
Mounting screws
Automotive grade, double-sided, mount anywhere tape

OD1232-SPOT

Part Number - 124141794
120x32mm
Thermally controlled Fan *
6′ Cord with adaptor
1 guard installed

OD9225-SPOT - Instant smart cooling for small spaces is also available in a smaller package

Part Number - 193141791
92x25mm thermally controlled fan.
[50CFM (3,100RPM) at 34C to
< 30CFM (1,600RPM) at 22C]
6′ cord with adaptor
1 guard installed

OD2510 Series

DC Fan - 5, 12V
25 x 10mm (1.0" x 0.39")

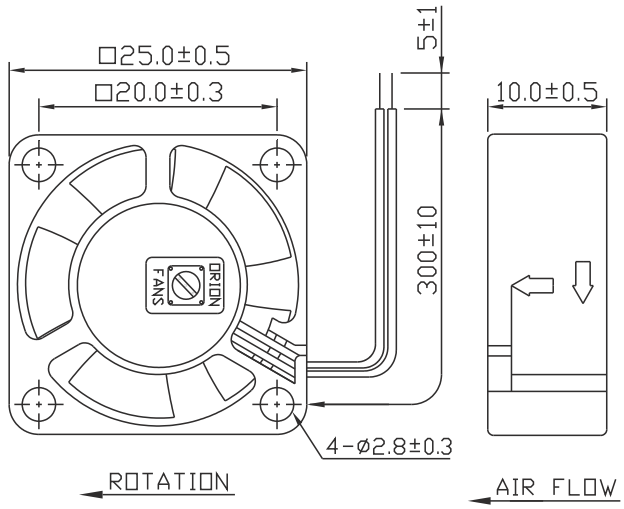

Frame & Impeller	PBT, UL94V-0 plastic
Connection	2x Lead wires 28AWG
Motor	Brushless DC, auto restart, impedance and polarity protected
Bearing System	Ball bearing or Sleeve
Insulation Resistance	10M ohm between leadwire and frame (500VDC)
Dielectric Strength	1 minute at 500 VAC, max leakage < 500 MicroAmp
Storage Temperature	-40C ~ +80C

Available Options:
Tachometer
Alarm

Life Expectancy (L10)
Ball - 60,000 hrs (45C)
Sleeve - 30,000 hrs (45C)

Operating Temperature
Ball: -20C ~ +75C
Sleeve: -10C ~ 50C

Weight: ~ 0.02 lbs

m1

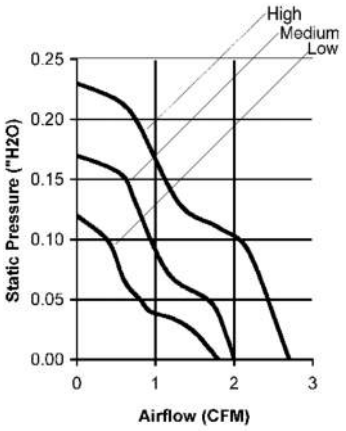

Model Number	Speed (RPM)	Airflow (CFM)	Noise (dB)	Volts DC	Voltage Range (VDC)	Amps	Max. Static Pressure ("H_2O)
OD2510-05H *	12,000	2.7	31	5	4.0 ~ 5.5	0.14	0.23
OD2510-05M *	10,000	2.2	24	5	4.0 ~ 5.5	0.12	0.17
OD2510-05L *	8,000	1.8	18	5	4.0 ~ 5.5	0.10	0.12
OD2510-12H *	12,000	2.7	31	12	6.0 ~ 16	0.09	0.23
OD2510-12M *	10,000	2.2	24	12	6.0 ~ 16	0.08	0.17
OD2510-12L *	8,000	1.8	16	12	6.0 ~ 16	0.04	0.12
OD2510-12LL *	7,000	1.45	15	12	9.0 ~ 13.2	0.07	0.07

* Indicate "B" for ball bearing or "S" for sleeve bearing

OD3010 Series

DC Fan - 5, 12V
30 x 10mm (1.18" x 0.39")

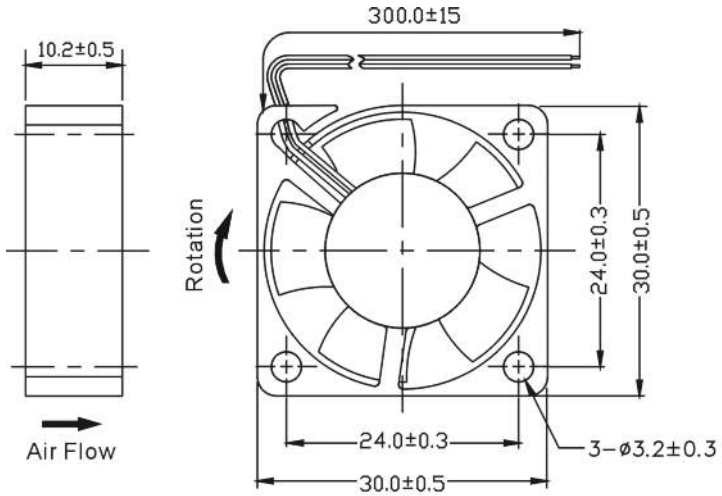

Frame & Impeller	PBT, UL94V-0 plastic
Connection	2x Lead wires 28AWG
Motor	Brushless DC, auto restart, impedance and polarity protected
Bearing System	Ball bearing or Sleeve
Insulation Resistance	10M ohm between leadwire and frame (500VDC)
Dielectric Strength	1 minute at 500 VAC, max leakage < 500 MicroAmp
Storage Temperature	-40C ~ +80C

Available Options:
Tachometer
Alarm

Life Expectancy (L10)
Ball - 60,000 hrs (45C)
Sleeve - 30,000 hrs (45C)

Operating Temperature
Ball: -20C ~ +75C
Sleeve: -10C ~ +60C

Weight: ~ 0.02 lbs

m4

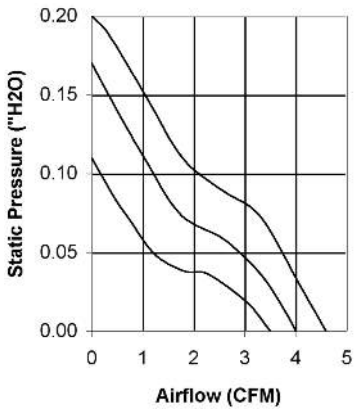

Model Number	Speed (RPM)	Airflow (CFM)	Noise (dB)	Volts DC	Voltage Range (VDC)	Amps	Max. Static Pressure ("H_2O)
OD3010-05H *	10,000	4.6	31	05	4.5~5.5	0.17	0.20
OD3010-05MB *	9,000	4.0	30	05	4.5~5.5	0.08	0.17
OD3010-12H *	10,000	4.6	31	12	9~13.2	0.10	0.20
OD3010-12M *	9,000	4.0	27	12	9~13.2	0.09	0.17
OD3010-12L *	8,000	3.0	20	12	9~13.2	0.06	0.11

* Indicate "B" for ball bearing or "S" for sleeve bearing

OD3510 Series

DC Fan - 5, 12Vdc
35 x 10mm (1.38" x 0.39")

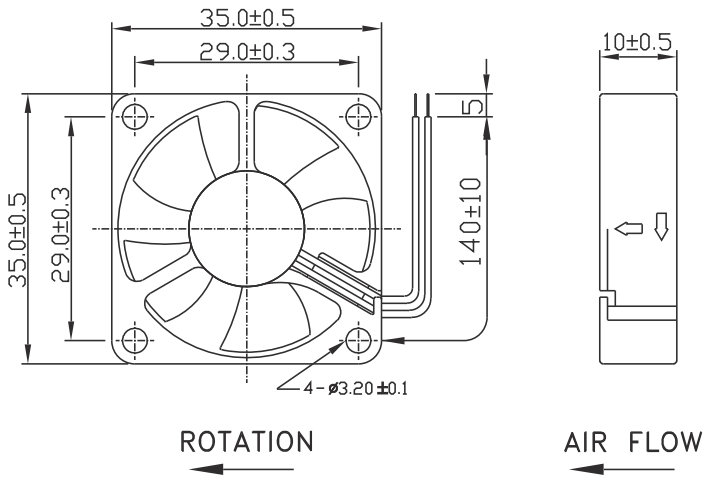

Frame & Impeller	PBT, UL94V-0 plastic
Connection	2x Lead wires 28AWG
Motor	Brushless DC, auto restart, polarity protected
Bearing System	Dual ball bearing
Insulation Resistance	Min. 10M at 500VDC
Dielectric Strength	1 second at 500 VAC, max leakage 500 MicroAmp
Temperature Range	-10C ~ +70C
Storage Temperature	-40C ~ +80C
Life (L10)	70,000 hours (40C)

Available Options:
IP55
Other speeds and voltages
Tachometer
Alarm

* Connection:
Wire Leads - UL 1571
28AWG Red (+), Black (-),

Weight: .02 lbs.

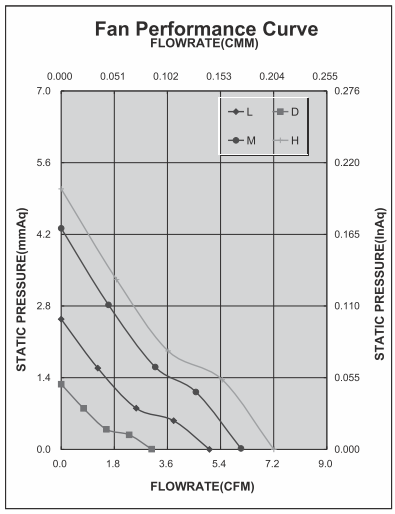

Model Number	Speed (RPM)	Airflow (CFM)	Noise (dB)	Volts DC	Voltage Range	Nominal Current	Input Power (Watts)	Max. Static Pressure ("H_2O)
OD3510-05MB	8,000	6	32	5	4~5.5 VDC	.075 A	.65	0.17
OD3510-12MB	8,000	6	32	12	9~13.2 VDC	.065 A	1.56	0.17
OD3510-12LLB	4,500	3	17	12	9~13.2 VDC	.04 A	.60	.05

Knight Electronics, Inc.
10557 Metric Drive
Dallas, Texas 75243
214-340-0265

RoHS Compliant

Orion Fans
Information and data is subject to change without prior notification.

OD4010 Series

DC Fan - 5, 12, 24V
40 x 10mm (1.58" x 0.39")

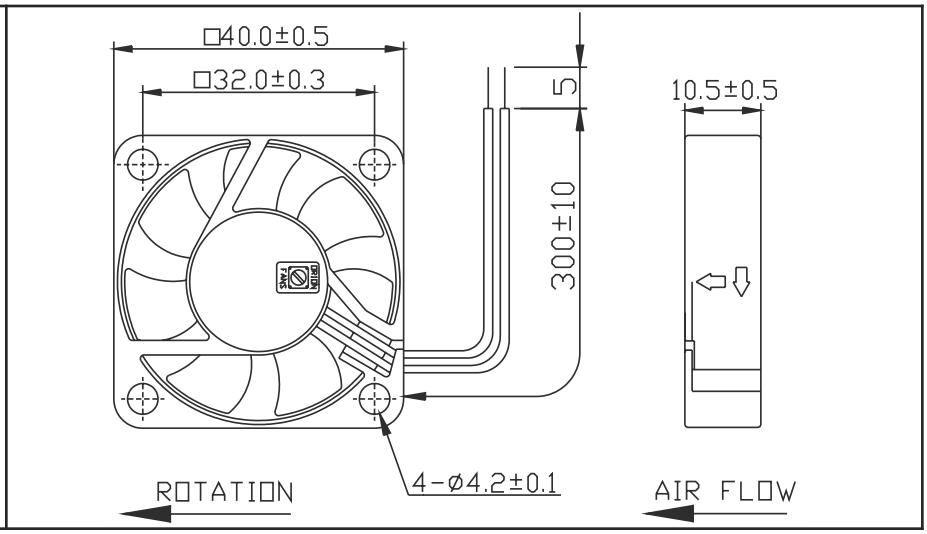

Frame & Impeller	PBT, UL94V-0 plastic
Connection	2x Lead wires 26AWG
Motor	Brushless DC, auto restart, impedance and polarity protected
Bearing System	Ball bearing
Insulation Resistance	10M ohm between leadwire and frame (500VDC)
Dielectric Strength	1 minute at 500 VAC, max leakage < 500 MicroAmp
Storage Temperature	-40C ~ +80C

Available Options:
Tachometer
Alarm
PWM
Sleeve bearing

Life Expectancy (L10)
Ball - 60,000 hrs (45C)
Sleeve - 30,000 hrs (45C)

Operating Temperature
Ball: -20C ~ +75C

Weight: ~ 0.04 lbs

m1

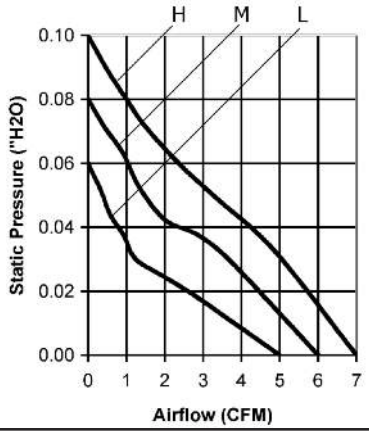

Model Number	Speed (RPM)	Airflow (CFM)	Noise (dB)	Volts DC	Voltage Range (VDC)	Amps	Max. Static Pressure ("H_2O)
OD4010-05H*	6,000	7	25	5	4 ~ 5.5	0.19	0.10
OD4010-05M*	4,800	6	20	5	4 ~ 5.5	0.11	0.08
OD4010-05L*	4,200	5	14	5	4 ~ 5.5	0.08	0.06
OD4010-12H*	6,000	7	25	12	10.8 ~ 13.2	0.10	0.10
OD4010-12M*	4,800	6	20	12	10.8 ~ 13.2	0.08	0.08
OD4010-12L*	4,200	5	14	12	10.8 ~ 13.2	0.07	0.06
OD4010-24H*	6,000	7	25	24	21.6 ~ 26.4	0.09	0.10
OD4010-24M*	4,800	6	20	24	21.6 ~ 26.4	0.08	0.08
OD4010-24L*	4,200	5	14	24	21.6 ~ 26.4	0.07	0.06

To indicate sleeve bearing replace "B" suffix with "S" in part number (30,000 hrs life expectancy)
To indicate sealed sleeve bearing replace "B" with "SS" in part number (50,000 hrs life expectancy)

OD4015 Series

DC Fan - 5, 12, 24VDC
40 x 15mm (1.58" x 0.59")

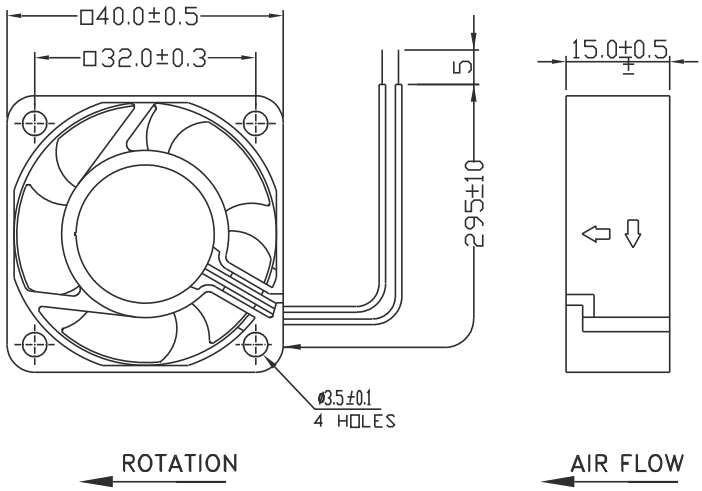

Frame & Impeller	PBT, UL94V-0 plastic
Connection	2x Lead wires *
Motor	Brushless DC, auto restart, polarity protected
Bearing System	Dual ball bearing
Insulation Resistance	Min. 10M at 500VDC
Dielectric Strength	1 second at 500 VAC, max leakage < 500 MicroAmp
Temperature Range	-10C ~ +70C
Storage Temperature	-40C ~ +80C
Life (L10)	70,000 hours (40C)

Available Options:
IP55
Other speeds and voltages
Tachometer
Alarm

*Connection:
Wire Leads UL 1007
26AWG Red (+), Black (-)

Weight: .05 lbs.

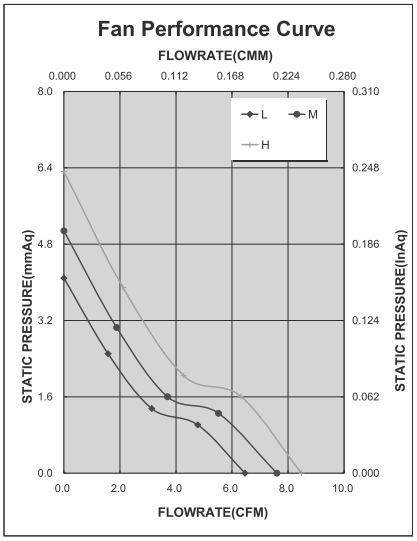

Model Number	Part Number	Speed (RPM)	Airflow (CFM)	Noise (dB)	Volts DC	Voltage Range	Nominal Current	Input Power (Watts)	Max. Static Pressure ("H_2O)
OD4015-05HB	146541001	8,000	8.5	36	5	4~5.5 VDC	.25 A	1.5	.25
OD4015-05LB	145121001	6,000	6.8	26	5	4~5.5 VDC	.15 A	1.5	.16
OD4015-12HB	146141001	8,000	8.5	36	12	9~13.2 VDC	.11 A	1.8	.25
OD4015-12MB	146131001	7,000	8.1	32	12	9~13.2 VDC	.088 A	1.4	.23
OD4015-12LB	146121001	6,000	6.8	26	12	9~13.2 VDC	.052 A	1.2	.16
OD4015-24HB	146241001	8,000	8.5	36	24	17~26.4 VDC	.06 A	1.92	.25
OD4015-24LB	146221001	6,000	6.8	29	24	17~26.4 VDC	.06 A	1.92	.16

Knight Electronics, Inc.
10557 Metric Drive
Dallas, Texas 75243
214-340-0265

RoHS Compliant

Orion Fans
Information and data is subject to change without prior notification.

OD4020 Series

DC Fan - 5, 12, 24V
40 x 20mm (1.58" x 0.79")

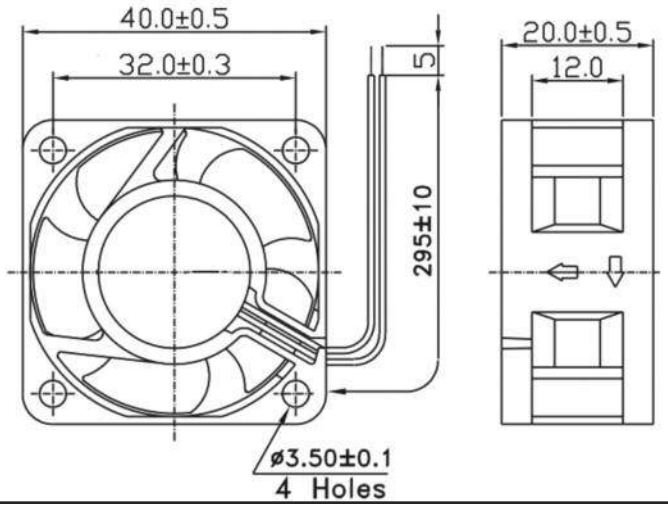

Frame & Impeller	PBT, UL94V-0 plastic
Connection	2x Lead wires 26AWG
Motor	Brushless DC, auto restart, impedance and polarity protected
Bearing System	Ball bearing
Insulation Resistance	10M ohm between leadwire and frame (500VDC)
Dielectric Strength	1 minute at 500 VAC, max leakage < 500 MicroAmp
Storage Temperature	-40C ~ +80C

Available Options:
Sleeve Bearing
Sealed Sleeve Bearing
Tachometer
Alarm

Life Expectancy (L10)
Ball - 60,000 hrs (45C)
Sleeve - 30,000 hrs (45C)

Operating Temperature
Ball: -20C ~ 75C

Weight: ~0.06 lbs.

m1

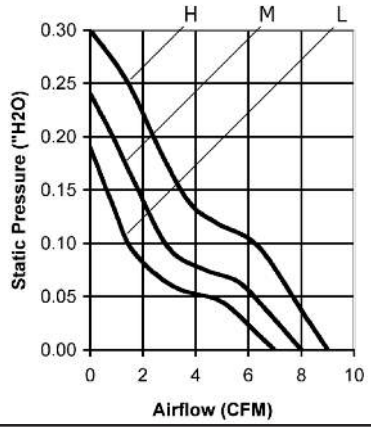

Model Number	Speed (RPM)	Airflow (CFM)	Noise (dB)	Volts DC	Voltage Range (VDC)	Amps	Max. Static Pressure ("H_2O)
OD4020-05HB	7,800	9	36	5	4 ~ 7	0.29	0.30
OD4020-05MB	6,900	8	33	5	4 ~ 7	0.16	0.24
OD4020-05LB	6,200	7	30	5	4 ~ 7	0.14	0.19
OD4020-12HB	7,800	9	36	12	7 ~ 14	0.10	0.30
OD4020-12MB	6,900	8	33	12	7 ~ 14	0.08	0.24
OD4020-12LB	6,200	7	30	12	7 ~ 14	0.07	0.19
OD4020-24HB	7,800	9	36	24	10 ~ 27	0.09	0.30
OD4020-24MB	6,900	8	33	24	10 ~ 27	0.07	0.24
OD4020-24LB	6,200	7	30	24	10 ~ 27	0.06	0.19

To indicate sleeve bearing replace "B" suffix with "S" in part number (30,000 hrs life expectancy)
To indicate sealed sleeve bearing replace "B" with "SS" in part number (50,000 hrs life expectancy)

OD4028 Series

DC Fan - 5, 12, 24V
40 x 28mm (1.58" x 1.10")

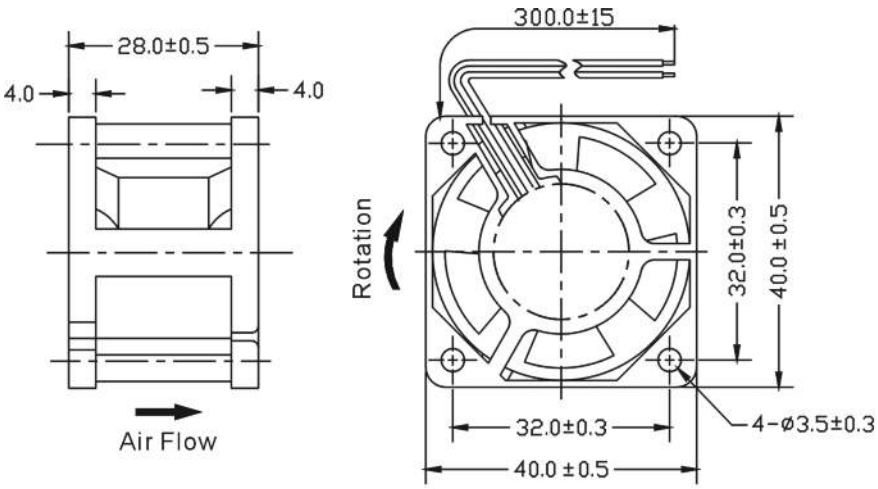

Frame & Impeller	PBT, UL94V-0 plastic
Connection	2x Lead wires 26AWG
Motor	Brushless DC, auto restart, impedance and polarity protected
Bearing System	Ball bearing or Sleeve
Insulation Resistance	10M ohm between leadwire and frame (500VDC)
Dielectric Strength	1 minute at 500 VAC, max leakage < 500 MicroAmp
Storage Temperature	-40C ~ +80C

Available Options:
Tachometer
Alarm
PWM (Pulse Width Modulated speed control)
Thermistor (Thermal Speed Control)

Life Expectancy (L10)
Ball - 60,000 hrs (45C)
Sleeve - 30,000 hrs (45C)

Operating Temperature
Ball: -20C ~ 75C
Sleeve: -10C ~ 50C

Weight: ~ 0.08 lbs

m1/m4

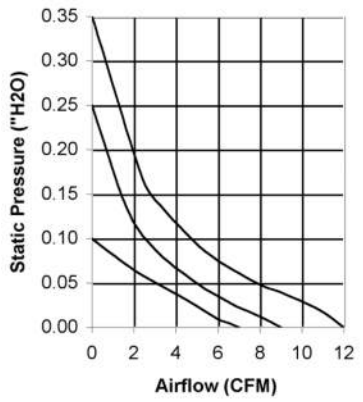

(5V not shown)

Model Number	Speed (RPM)	Airflow (CFM)	Noise (dB)	Volts DC	Voltage Range (VDC)	Amps	Max. Static Pressure ("H_2O)
OD4028-05H *	7,500	10	32	5	3.5 ~ 6	0.35	0.24
OD4028-05M *	6,500	9	29	5	4~7	0.30	0.17
OD4028-05L *	5,000	7	25	5	4~7	0.22	0.10
OD4028-12H *	8,800	12	37	12	7~14	0.20	0.32
OD4028-12M *	8,000	11	35	12	7~14	0.18	0.25
OD4028-12L *	5,000	7	25	12	7~14	0.12	0.10
OD4028-24H *	8,800	12	37	24	10~27	0.16	0.32
OD4028-24M *	8,000	11	35	24	10~27	0.12	0.25
OD4028-24L *	5,000	7	25	24	10~27	0.09	0.10

* Indicate "B" for ball bearing or "S" for sleeve bearing

OD4028 - XC Series

DC Fan - 12V, 24V High Speed
40 x 28mm (1.58" x 1.10")

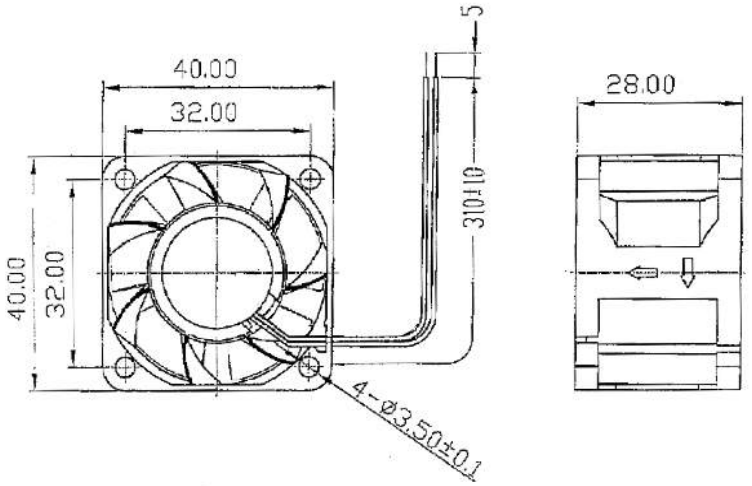

Frame & Impeller	PBT, UL94V-0 plastic
Connection	2x Lead wires
Motor	Brushless DC, auto restart, polarity protected.
Bearing System	Dual ball bearing
Insulation Resistance	Min. 10M at 500VDC
Dielectric Strength	1 minute at 500 VAC, max leakage < 500 MicroAmp
Temperature Range	-20C ~ +75C
Storage Temperature	-40C ~ +80C

Available Options:

Tachometer
Alarm
PWM

Life Expectancy (L10)
50,000 hours (40C)

Weight: ~ 0.09 lbs

m1

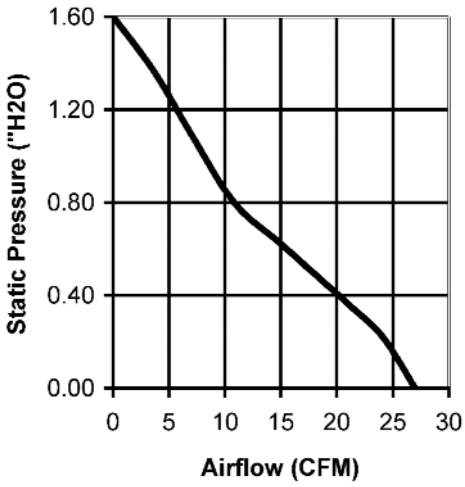

Part Number	OD4028-12HBXC	OD4028-24HBXC
Nominal Voltage	12 VDC	24 VDC
Voltage Range	10.8 ~ 13.2 VDC	21.6 ~ 26.4 VDC
Nominal Current	0.8 A	0.035 A
Start-up Voltage	9.0 VDC	17.0 VDC
Rated Power	9.5 W	8.4 W
Rated Speed (RPM)	16,000	16,000
Airflow (CFM)	26.5	26.5
Noise Level (dB)	57	57
Max. Static Pressure	1.60" H_2O	1.60" H_2O

Knight Electronics, Inc.
10557 Metric Drive
Dallas, Texas 75243
214-340-0265

RoHS Compliant

Orion Fans
Information and data is subject to change without prior notification.

OD5010 Series

DC Fan - 5, 12, 24V
50 x 10mm (1.97" x 0.39")

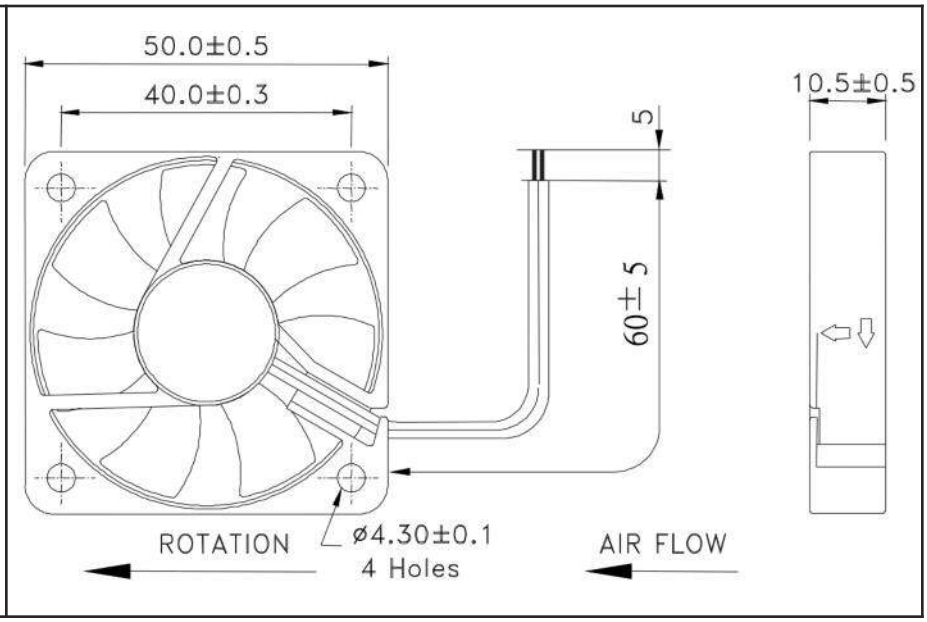

Frame & Impeller	PBT, UL94V-0 plastic
Connection	2x Lead wires (~290mm) 26AWG
Motor	Brushless DC, auto restart, polarity protected
Bearing System	Dual Ball, sleeve, or sealed sleeve
Insulation Resistance	10M ohm between leadwire and frame (500VDC)
Dielectric Strength	1 minute at 500 VAC, max leakage < 500 MicroAmp
Storage Temperature	-40C ~ +80C

Available Options:
Tachometer
Alarm

Life Expectancy (L10)
60,000 hrs Ball
50,000 hrs Sealed Sleeve
30,000 hrs Sleeve

Operating Temperature
-20C ~ +75C

Weight: ~ 0.04 lbs.

m1

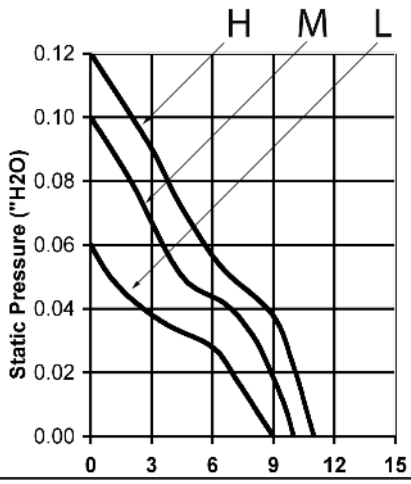

Model Number	Speed (RPM)	Airflow (CFM)	Noise (dB)	Volts DC	Input Power (Watts)	Amps	Max. Static Pressure ("H_2O)
OD5010-05H *	5,200	11	28	5	1.15	0.23	0.12
OD5010-05M *	4,600	10	25	5	0.75	0.15	0.10
OD5010-05L *	3,900	9	20	5	0.45	0.10	0.06
OD5010-12H *	5,200	11	28	12	1.44	0.12	0.12
OD5010-12M *	4,600	10	25	12	1.08	0.09	0.10
OD5010-12L *	3,900	9	20	12	0.96	0.08	0.06
OD5010-24H *	5,200	11	28	24	1.92	0.08	0.12
OD5010-24M *	4,600	10	25	24	1.44	0.06	0.10
OD5010-24L *	3,900	9	20	24	1.20	0.05	0.06

* Indicate "B" for ball bearing, "S" for sleeve bearing, or "SS" for sealed sleeve

Knight Electronics, Inc.
10557 Metric Drive
Dallas, Texas 75243
214-340-0265

RoHS Compliant

Orion Fans
Information and data is subject to change without prior notification.

OD5015-12HB

DC Fan - 12V
50 x 15mm (1.96" x 0.59")

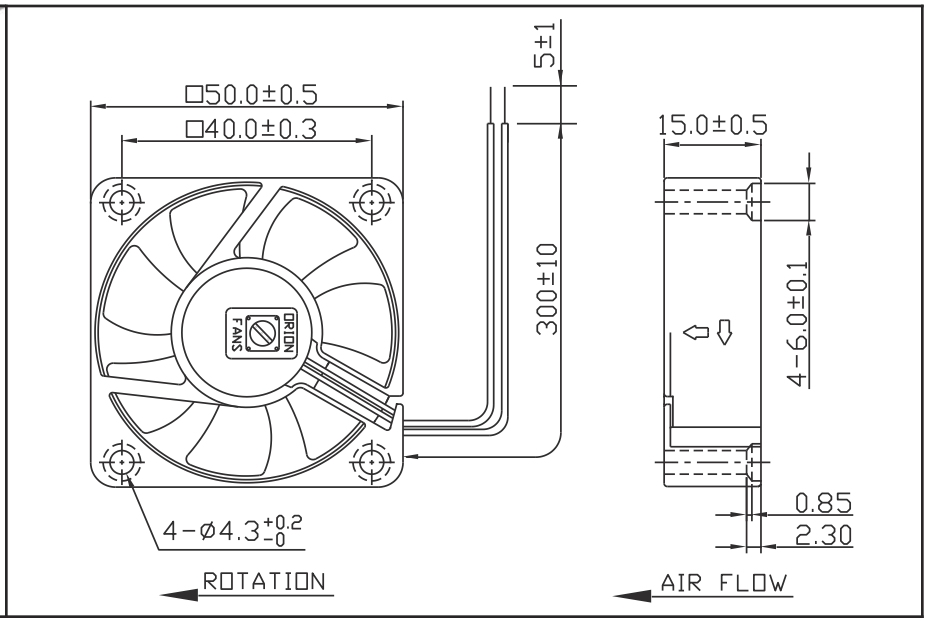

Frame & Impeller	PBT, UL94V-0
Connection	2x Lead wires *
Motor	Brushless DC, impedence protected
Bearing System	Ball
Insulation Resistance	10M ohm between leadwire and frame (500VDC)
Dielectric Strength	60 seconds at 500 VAC, max leakage < 500 MicroAmp
Temperature Range	-10C ~ +70C
Life Expectancy	70,000 hours (40C)

Notes
Date: 063015

Available Options:
Tachometer
Alarm
Other speeds and Voltages

*Connection:
UL 1007 26AWG, Black GND
UL 1007 26AWG, Red Vcc

Weight: .06 lbs.

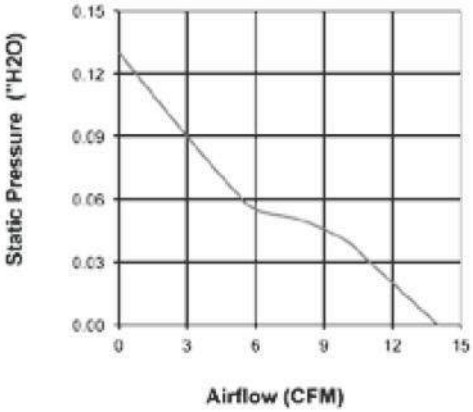

Model Number	Part Number	Speed (RPM)	Airflow (CFM)	Noise (dB)	Volts DC	Voltage Range	Nominal Current	Input Power (Watts)	Max. Static Pressure ("H_2O)
OD5015-12HB	106141001	4,800	14	30	12	9~13.2 VDC	.11 A	1.68	0.13

* Indicate "B" for ball bearing, "S" for sleeve bearing, or "SS" for sealed sleeve

Knight Electronics, Inc.
10557 Metric Drive
Dallas, Texas 75243
214-340-0265

RoHS Compliant

Orion Fans
Information and data is subject to change without prior notification.

OD5210 Series

DC Fan - 5, 12V
52 x 10mm (2.05" x 0.39")

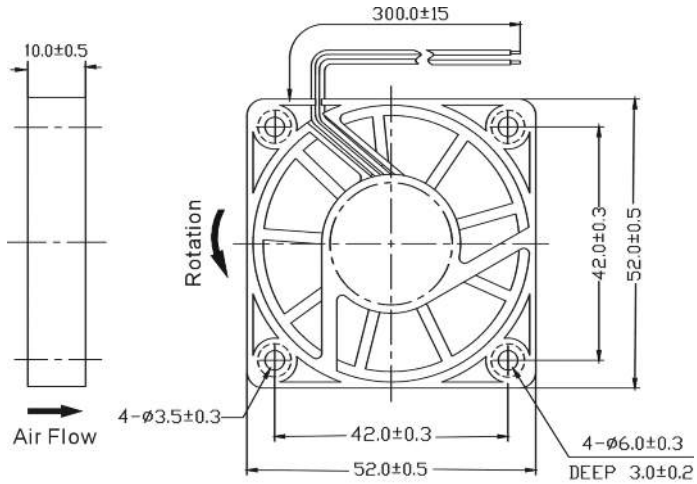

Frame & Impeller	PBT, UL94V-0 plastic
Connection	2x Lead wires 26AWG
Motor	Brushless DC, auto restart, impedance and polarity protected
Bearing System	Ball bearing or Sleeve
Insulation Resistance	10M ohm between leadwire and frame (500VDC)
Dielectric Strength	1 minute at 500 VAC, max leakage < 500 MicroAmp
Storage Temperature	-40C ~ +80C

Available Options:
Tachometer
Alarm

Life Expectancy (L10)
Ball - 60,000 hrs (45C)
Sleeve - 30,000 hrs (45C)

Operating Temperature
Ball: -20C + 75C
Sleeve: -10C ~ +50C

Weight: ~ 0.05 lbs

m4

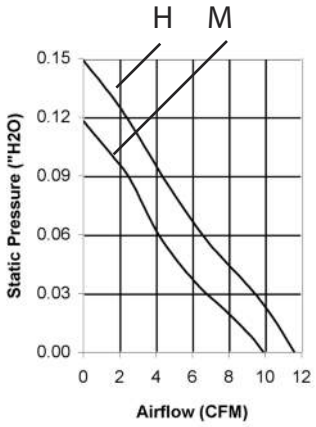

Model Number	Speed (RPM)	Airflow (CFM)	Noise (dB)	Volts DC	Voltage Range (VDC)	Amps	Max. Static Pressure ("H_2O)
OD5210-05H *	6,000	12	38	5	3.5~5.7	0.35	0.14
OD5210-05M *	5,000	10	32	5	3.5~5.7	0.21	0.11
OD5210-12H *	6,000	12	36	12	8~17	0.14	0.14
OD5210-12M *	5,000	10	32	12	8~17	0.12	0.11

* Indicate "B" for ball bearing or "S" for sleeve bearing

OD6010 Series

DC Fan - 5V, 12V
60 x 10mm (2.36" x 0.39")

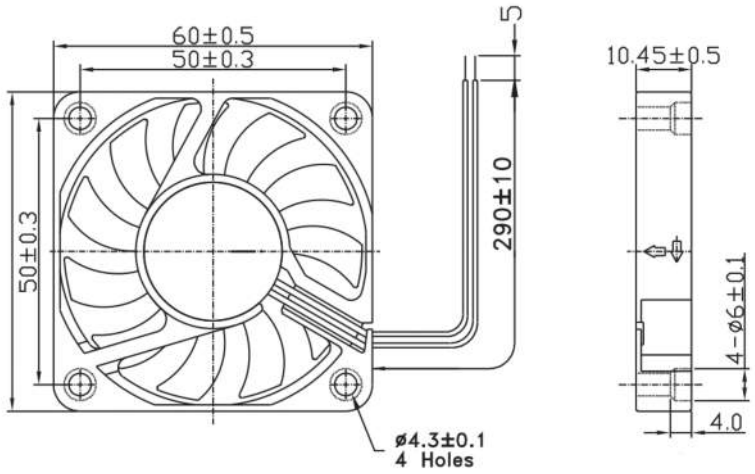

Frame & Impeller	PBT, UL94V-0 plastic
Connection	2x Lead wires 24AWG
Motor	Brushless DC, auto restart, impedance and polarity protected
Bearing System	Ball bearing or Sleeve
Insulation Resistance	10M ohm between leadwire and frame (500VDC)
Dielectric Strength	1 minute at 500 VAC, max leakage < 500 MicroAmp
Storage Temperature	-40C ~ +80C

Available Options:
Tachometer
Alarm
24V

Life Expectancy (L10)
Ball - 60,000 hrs (45C)
Sleeve - 30,000 hrs (45C)

Operating Temperature
Ball: -20C ~ +75C
Sleeve: -10C ~ +50C

Weight: ~ 0.07 lbs

m1

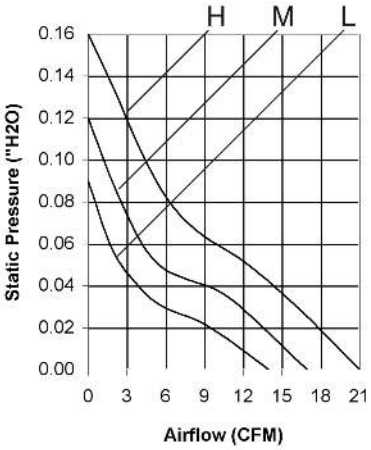

Model Number	Speed (RPM)	Airflow (CFM)	Noise (dB)	Volts DC	Input Power (W)	Amps	Max. Static Pressure ("H_2O)
OD6010-05M *	4,000	17	31	5	1.65	0.33	0.12
OD6010-05L *	3,400	14	26	5	1.30	0.26	0.09
OD6010-12H *	4,600	21	36	12	3.00	0.25	0.16
OD6010-12M *	4,000	17	31	12	1.92	0.16	0.12
OD6010-12L *	3,400	14	26	12	1.20	0.10	0.09

* Indicate "B" for ball bearing or "S" for sleeve bearing

OD6015 Series

DC Fan - 5, 12, 24V
60 x 15mm (2.36" x 0.59")

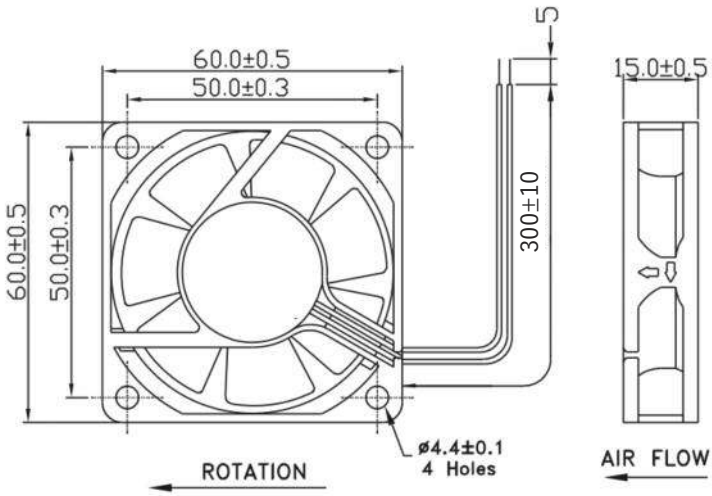

Frame & Impeller	PBT, UL94V-0 plastic
Connection	2x Lead wires
Motor	Brushless DC, auto restart, polarity protected
Bearing System	Dual Ball
Insulation Resistance	10M ohm between leadwire and frame (500VDC)
Dielectric Strength	1 minute at 500 VAC, max leakage < 500 MicroAmp
Storage Temperature	-40C ~ +80C

Available Options:
Tachometer (FG)
Alarm (RD)
Other frame styles available
Sleeve Bearing

Life Expectancy (L10)
Ball Bearing
60,000 hours (L10 at 40C)

Operating Temperature
Ball Bearing
-20C ~ +75C

Weight: ~ 0.08 lbs

m1

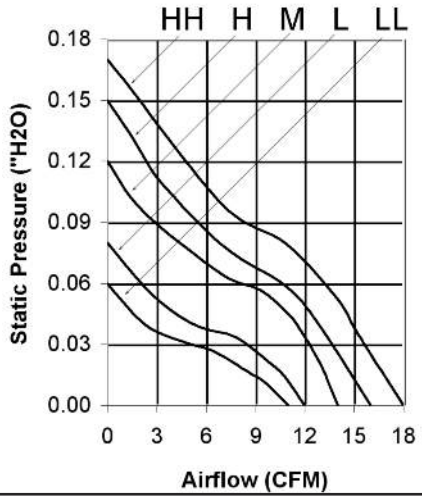

Model Number	Speed (RPM)	Airflow (CFM)	Noise (dB)	Volts DC	Power Input (Watts)	Amps	Max. Static Pressure ("H_2O)
OD6015-05HB	4,500	16	33	5	1.10	0.22	0.15
OD6015-05MB	3,900	14	29	5	0.90	0.18	0.12
OD6015-05LB	3,500	12	25	5	0.60	0.12	0.08
OD6015-12HHB	5,100	18	39	12	1.44	0.12	0.17
OD6015-12HB	4,500	16	33	12	1.08	0.09	0.15
OD6015-12MB	3,900	14	29	12	0.98	0.08	0.12
OD6015-12LB	3,500	12	25	12	0.84	0.07	0.08
OD6015-12LLB	3,100	11	21	12	0.72	0.06	0.06
OD6015-24HB	4,500	16	33	24	1.20	0.05	0.15

OD6020 Series

DC Fan - 12, 24V
60 x 20mm (2.36" x .79")

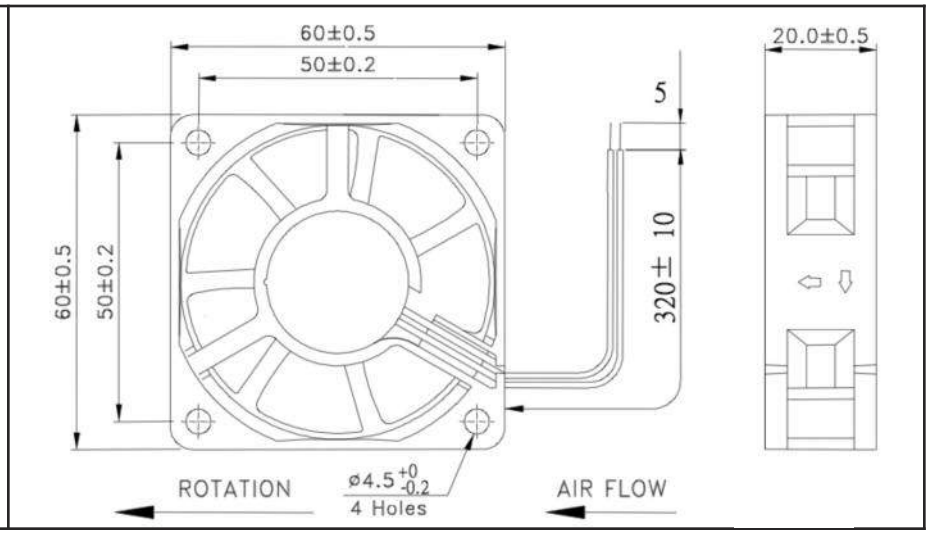

Frame & Impeller	PBT, UL94V-0 plastic
Connection	2x Lead wires
Motor	Brushless DC, auto restart, polarity protected
Bearing System	Dual Ball or Sleeve
Insulation Resistance	10M ohm between leadwire and frame (500VDC)
Dielectric Strength	1 minute at 500 VAC, max leakage < 500 MicroAmp
Storage Temperature	-40C ~ +80C

Available Options:
Tachometer
Alarm
Other frame styles available
5V available on request

Life Expectancy (L10)
Ball Bearing
60,000 hours (L10 at 40C)
Sleeve Bearing
30,000 hours (L10 at 40C)

Operating Temperature
Ball Bearing
-20C ~ +75C
Sleeve Bearing
-10C ~ +50C

Weight: ~ 0.11 lbs m1

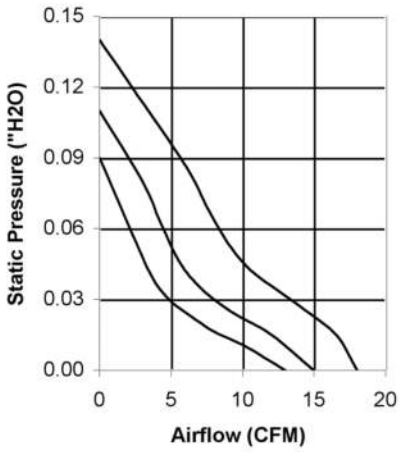

Model Number	Speed (RPM)	Airflow (CFM)	Noise (dB)	Volts DC	Voltage Range	Amps	Max. Static Pressure ("H_2O)
OD6020-12H*	4,500	18	30	12	10.8~13.2	0.16	0.14
OD6020-12M*	3,900	15	26	12	10.8~13.2	0.13	0.11
OD6020-12L*	3,500	13	22	12	10.8~13.2	0.08	0.09
OD6020-24H*	4,500	18	30	24	21.6~26.4	0.09	0.14
OD6020-24M*	3,900	15	26	24	21.6~26.4	0.06	0.11
OD6020-24L*	3,500	13	22	24	21.6~26.4	0.04	0.09

* Indicate "B" to specify Ball bearing or "S" to specify Sleeve bearing

OD6025 Series

DC Fan - 5, 12, 24, 48V
60 x 25mm (2.36" x 1.0")

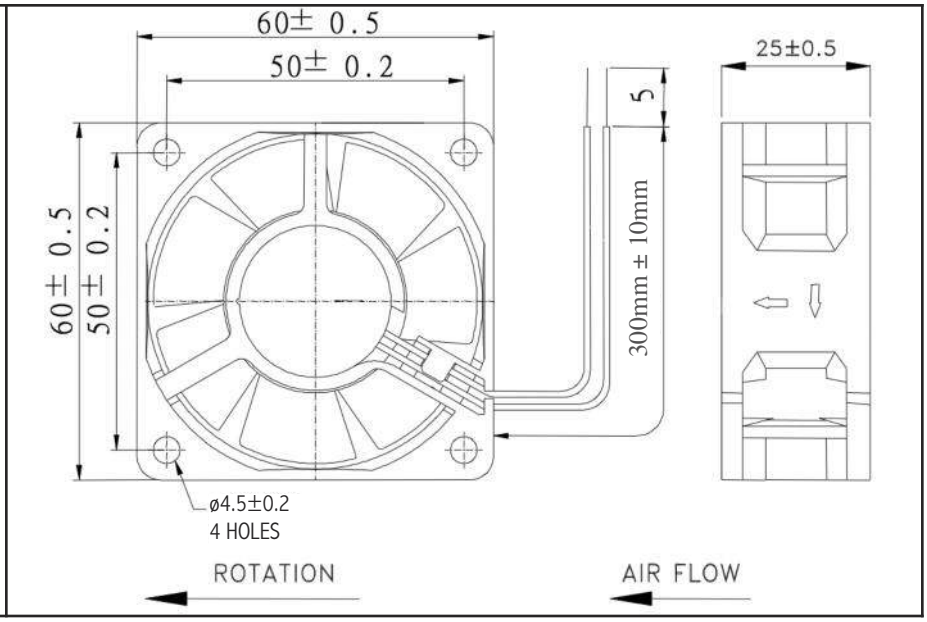

Frame & Impeller	PBT, UL94V-0 plastic
Connection	2x Lead wires 24AWG
Motor	Brushless DC, auto restart, polarity protected
Bearing System	Ball bearing or Sleeve
Insulation Resistance	10M ohm between leadwire and frame (500VDC)
Dielectric Strength	1 minute at 500 VAC, max leakage < 500 MicroAmp
Storage Temperature	-40C ~ +80C

Available Options:
Tachometer
Alarm
PWM
IP55

Life Expectancy (L10)
Ball - 60,000 hrs (45C)
Sleeve - 30,000 hrs (45C)

Operating Temperature
Ball: -20C ~ +75C
Sleeve: -10C ~ +50C

Weight: ~ 0.15 lbs

m1

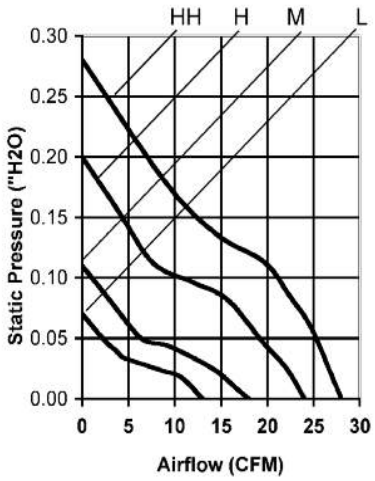

Model Number	Speed (RPM)	Airflow (CFM)	Noise (dB)	Volts DC	Input Power (Watts)	Amps	Max. Static Pressure ("H_2O)
OD6025-05H*	4,000	20	30	5	1.4	0.28	0.17
OD6025-12HH *	5,100	28	40	12	3.1	0.25	0.24
OD6025-12H *	4,500	24	35	12	2.8	0.23	0.20
OD6025-12M *	3,500	18	27	12	1.7	0.14	0.11
OD6025-12L *	2,500	13	18	12	1.0	0.08	0.07
OD6025-24HH *	5,100	28	40	24	3.9	0.16	0.24
OD6025-24H *	4,500	24	35	24	3.5	0.15	0.20
OD6025-24M *	3,500	18	27	24	1.9	0.08	0.11
OD6025-24L *	2,500	13	18	24	1.0	0.06	0.07
OD6025-48H*	4,200	28	30	48	3.4	0.07	0.24

To indicate sleeve bearing replace "B" suffix with "S" in part number (30,000 hrs life expectancy)
To indicate sealed sleeve bearing replace "B" with "SS" in part number (50,000 hrs life expectancy)

Knight Electronics, Inc.
10557 Metric Drive
Dallas, Texas 75243
214-340-0265

RoHS Compliant

Orion Fans
Information and data is subject to change without prior notification.

OD6038 VA Series

DC Fan 12V, 24V - Vaneaxial, High Pressure
60 x 38mm (2.36" x 1.5")

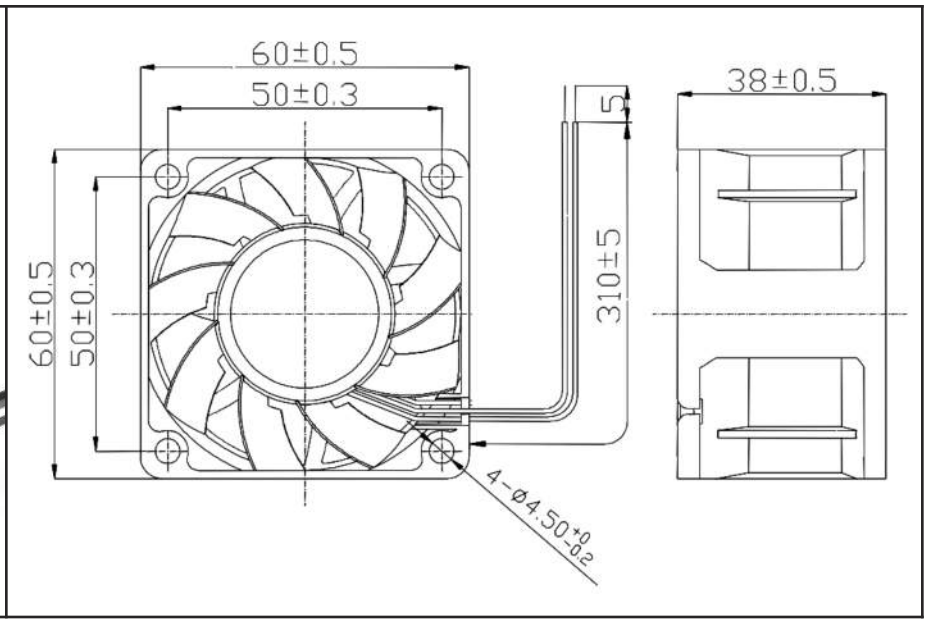

Frame & Impeller	PBT, UL94V-0 plastic
Connection	2x Lead wires, Red(+), Black (-)
Motor	Brushless DC, auto restart, polarity protected.
Bearing System	Dual ball bearing
Insulation Resistance	Min. 10M at 500VDC
Dielectric Strength	1 minute at 500 VAC, max leakage < 500 MicroAmp
Temperature Range	-20C ~ +75C
Storage Temperature	-40C ~ +80C

Available Options

Tachometer (FG)

Locked Rotor Alarm (RD)

Thermal Control

Other speeds and voltages available by special order

Life Expectancy (L10)
50,000 hours (40C)

Weight: ~ 0.24 lbs.

m1

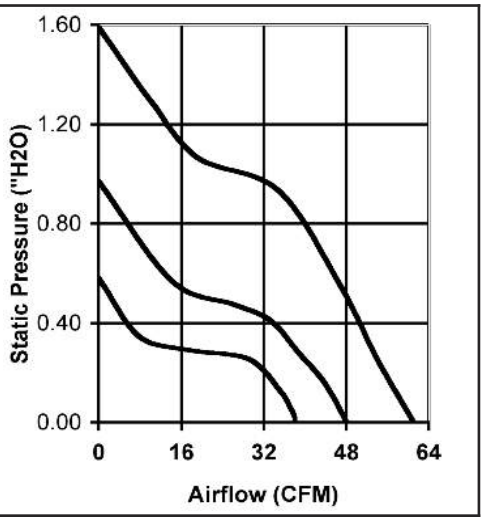

Model Number	Speed (RPM)	Airflow (CFM)	Noise (dB)	Volts DC	Input Power (Watts)	Amps	Max. Static Pressure ("H_2O)
OD6038-12HBVXC	10,000	61	64	12	17	1.42	1.59
OD6038-12MBVXC	8,000	48	58	12	8	0.64	0.97
OD6038-12LBVXC	6,000	38	50	12	3	0.28	0.58
OD6038-24HBVXC	10,000	61	64	24	21	0.88	1.59
OD6038-24MBVXC	8,000	48	58	24	10	0.43	0.97
OD6038-24LBVXC	6,000	38	50	24	4	0.20	0.58

Knight Electronics, Inc.
10557 Metric Drive
Dallas, Texas 75243
214-340-0265

RoHS Compliant

Orion Fans
Information and data is subject to change without prior notification.

OD6038 XC Series

DC Fan 12V, 24V
60 x 38mm (2.36" x 1.5")

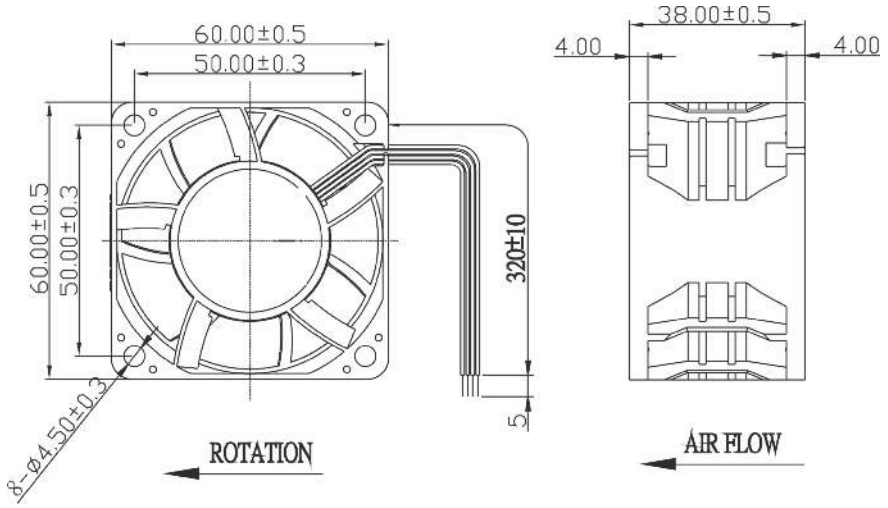

Frame & Impeller	PBT, UL94V-0 plastic
Connection	Lead wires *
Motor	Brushless DC, auto restart, polarity protected.
Bearing System	Dual ball bearing
Insulation Resistance	Min. 10M at 500VDC
Dielectric Strength	1 minute at 500 VAC, max leakage < 500 MicroAmp
Temperature Range	-20C ~ +70C
Storage Temperature	-40C ~ +80C
Life (L10)	70,000 hours (40C)

Available Options

Tachometer - Open Collector

PWM Input

Weight: ~ 0.24 lbs.

* Connection
UL1007, 24AWG, ~320mm
Red (+)
Black (-)

m1

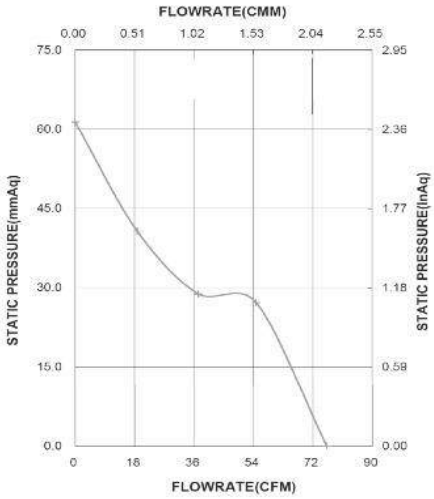

Part Number	Speed (RPM)	Airflow (CFM)	Noise Level (dB)	Nominal Voltage	Voltage Range V DC	Nominal Current	Rated Power	Max. Static Pressure ("H_2O)
OD6038-12HHBXC	16,000	86	66	12 V DC	10.8 ~ 13.2	2.70 A	36 W	2.95
OD6038-12HBXC	14,500	76	64	12 V DC	10.8 ~ 13.2	2.10 A	28.8 W	2.40
OD6038-12LBXC	13,000	68	61	12 V DC	10.8 ~ 13.2	1.45 A	21.6 W	1.95
OD6038-24HHBXC	16,000	86	66	24 V DC	21.6 ~ 26.4	1.25 A	30 W	2.95

Knight Electronics, Inc.
10557 Metric Drive
Dallas, Texas 75243
214-340-0265

RoHS Compliant

Orion Fans
Information and data is subject to change without prior notification.

OD7015 Series

DC Fan 12VDC
70 x 15mm (2.76" x .60")

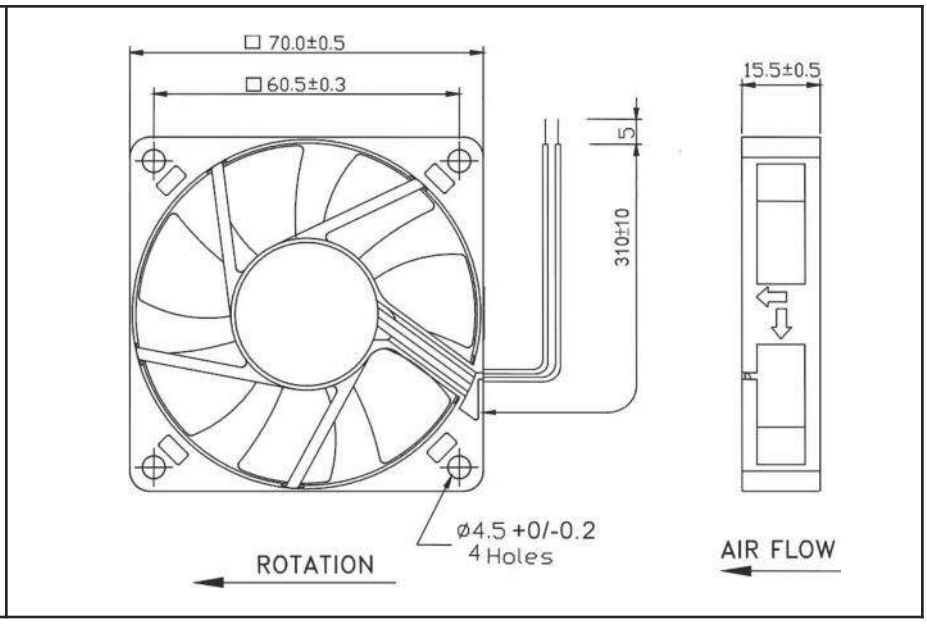

Frame & Impeller	PBT, UL94V-0 plastic
Connection	2x Lead wires *
Motor	Brushless DC, auto restart, polarity protected.
Bearing System	Dual ball bearing
Insulation Resistance	Min. 10M at 500VDC
Dielectric Strength	1 second at 500VAC max leakage 500 microamp
Temperature Range	-10C ~ +70C
Storage Temperature	-40C ~ +80C
Life (L10)	70,000 hours (40C)

Available Options

IP55
Other speeds and voltages
Tachometer
Alarm

*Connection:
Wire Leads - UL1007
24AWG Red(+), Black(-)

Weight: .13 lbs.

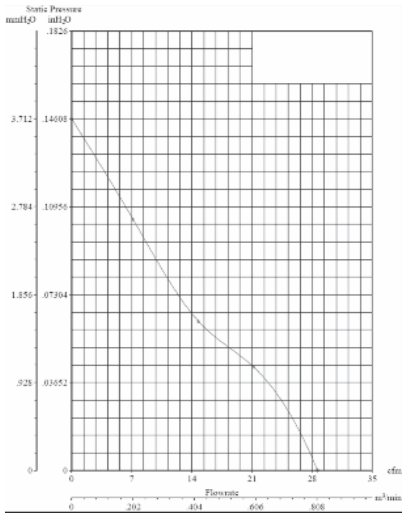

Model Number	Part Number	Speed (RPM)	Airflow (CFM)	Noise (dB)	Volts DC	Voltage Range	Nominal Current	Input Power (Watts)	Max. Static Pressure ("H_2O)
OD7015-12MB	112131001	3,500	28.5	37	12	7~13.2 VDC	.16A	2.16	.15

OD7015 Series

DC Fan 12VDC - Super High Speed
70 x 15mm (2.76" x .60")

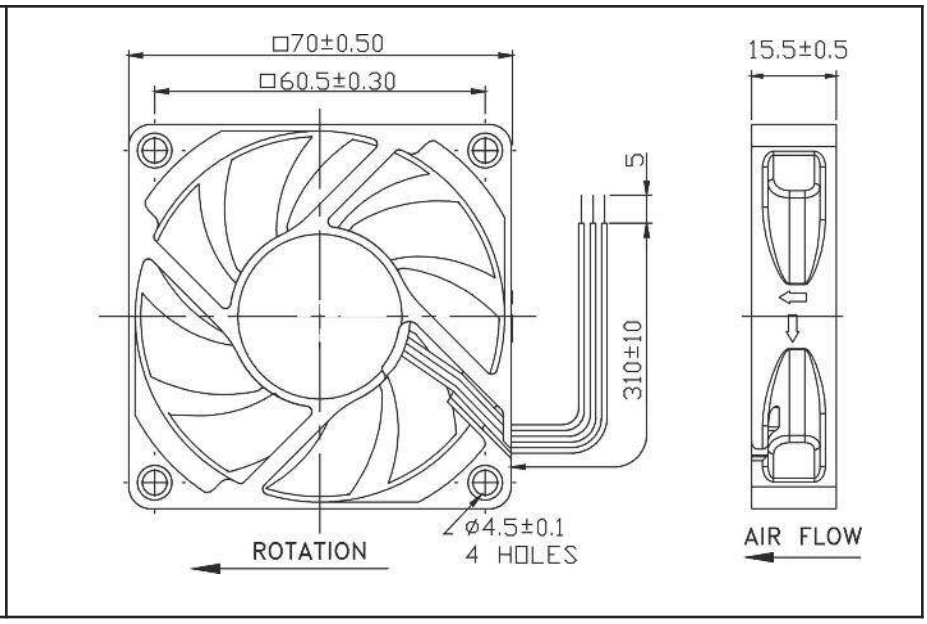

Frame & Impeller	PBT, UL94V-0 plastic
Connection	3x Lead wires *
Motor	Brushless DC, auto restart, polarity protected.
Bearing System	Dual ball bearing
Insulation Resistance	Min. 10M at 500VDC
Dielectric Strength	1 second at 500VAC max leakage 500 microamp
Temperature Range	-10C ~ +70C
Storage Temperature	-40C ~ +80C
Life (L10)	70,000 hours (40C)

Available Options

IP55
Other speeds and voltages
Tachometer
Alarm

*Connection:
Wire Leads - UL1007 24AWG Red(+), Black(-), White Tachometer

Weight: .13 lbs.

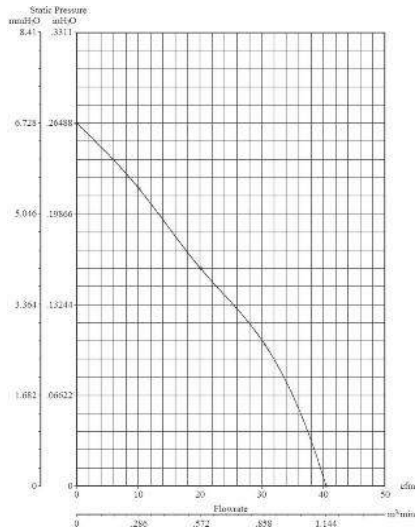

Model Number	Speed (RPM)	Airflow (CFM)	Noise (dB)	Volts DC	Voltage Range	Nominal Current	Input Power (Watts)	Max. Static Pressure ("H_2O)
OD7015-12HHB01A	5,500	41	44.5	12	7~13.2 VDC	.26A	4.32	.26

Knight Electronics, Inc.
10557 Metric Drive
Dallas, Texas 75243
214-340-0265

RoHS Compliant

Orion Fans
Information and data is subject to change without prior notification.

OD7020 Series

DC FAN, 12VDC
70 x 20mm (2.76" x .79")

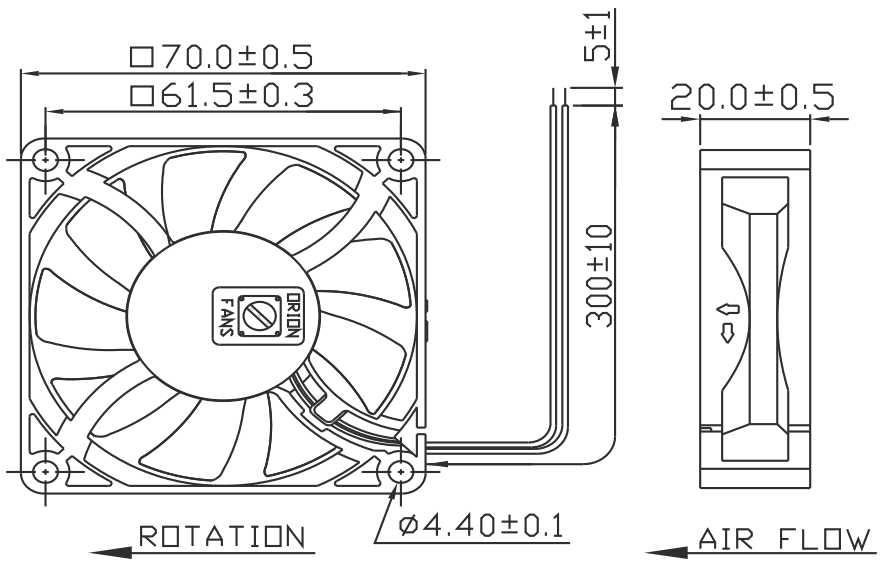

Frame & Impeller	PBT, UL94V-0 plastic
Connection	2x Lead wires *
Motor	Brushless DC, auto restart, polarity protected.
Bearing System	Dual ball bearing
Insulation Resistance	Min. 10M at 500VDC
Dielectric Strength	1 second at 500VAC max leakage 500 microamp
Temperature Range	-10C ~ +70C
Storage Temperature	-40C ~ +80C
Life (L10)	70,000 hours (40C)

Available Options
Thermal Control
IP55
Other speeds and voltages
PWM
Tachometer

*Connection:
Wire Leads - UL1007
24AWG Red(+), Black(-)

Weight: .14 lbs.

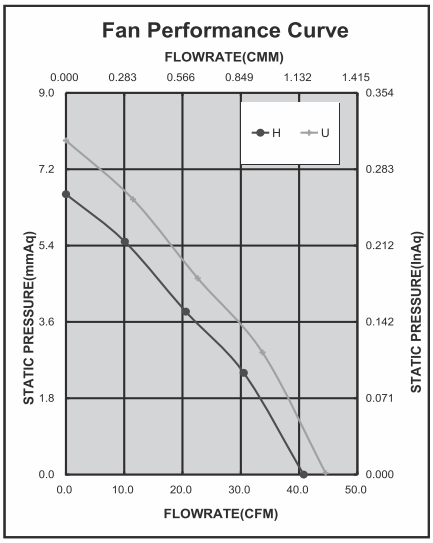

Model Number	Speed (RPM)	Airflow (CFM)	Noise (dB)	Volts DC	Voltage Range	Nominal Current	Input Power (Watts)	Max. Static Pressure ("H_2O)
OD7020-12HHB	5,000	45	43	12	8~13.2 VDC	.50 A	6	.31
OD7020-12HB	4,500	41	41.5	12	7~13.2 VDC	.35 A	5.2	.26

Knight Electronics, Inc.
10557 Metric Drive
Dallas, Texas 75243
214-340-0265

RoHS Compliant

Orion Fans
Information and data is subject to change without prior notification.

OD7025 Series

DC FAN, 12VDC
70 x 25mm (2.76"x 1.0")

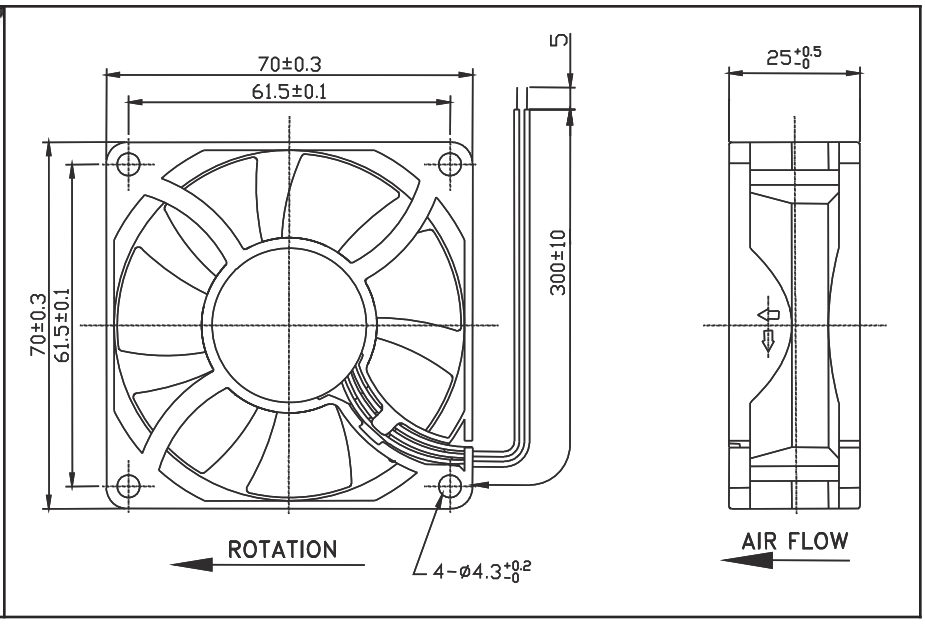

Frame & Impeller	PBT, UL94V-0 plastic
Connection	2x Lead wires *
Motor	Brushless DC, auto restart, polarity protected.
Bearing System	Dual ball bearing
Insulation Resistance	Min. 10M at 500VDC
Dielectric Strength	1 second at 500VAC max leakage 500 microamp
Temperature Range	-10C ~ +70C
Storage Temperature	-40C ~ +80C
Life (L10)	70,000 hours (40C)

Available Options

IP55
Other speeds and voltages
Alarm
PWM
Tachometer

*Connection:
Wire Leads - UL1007
24AWG Red(+), Black(-)

Weight: .20 lbs.

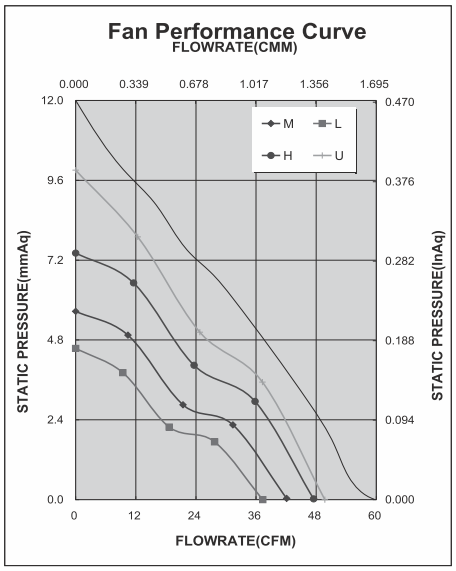

Model Number	Part Number	Speed (RPM)	Airflow (CFM)	Noise (dB)	Volts DC	Voltage Range	Nominal Current	Input Power (Watts)	Max. Static Pressure ("H_2O)
OD7025-12HBXC	114181001	6,000	60	49.5	12	7~13.2 VDC	.62 A	9.6	.50
OD7025-12HHB10A	114151261	5,000	51	46	12	7~13.2 VDC	.33 A	5.04	.35
OD7025-24HHB	114251001	5,000	51	46	24	17~26.4 VDC	.20 A	6.24	.35
OD7025-24MB	114231001	3,800	33	36	24	17~26.4 VDC	.085	2.64	.20

OD8015 Series

DC Fan - 12, 24V
80 x 15mm (3.15" x 0.59")

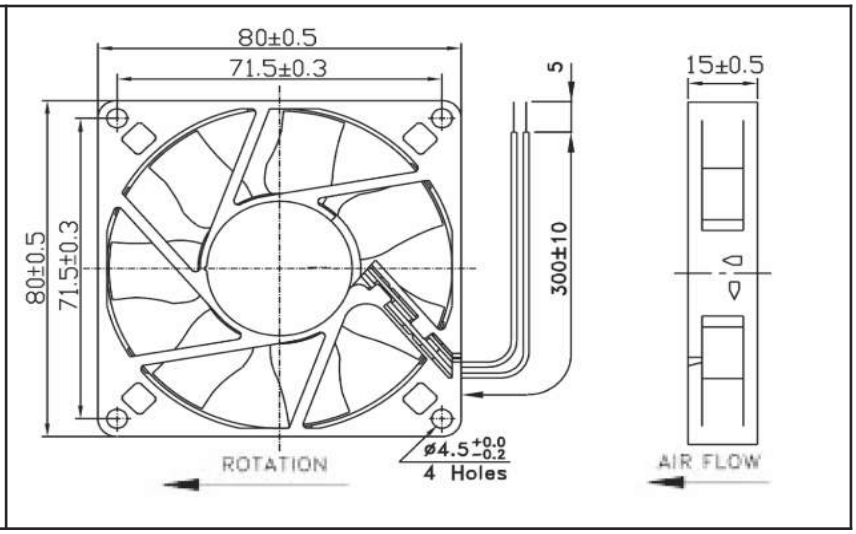

Frame & Impeller	PBT, UL94V-0 plastic
Connection	2x Lead wires 26AWG
Motor	Brushless DC, auto restart, impedance and polarity protected
Bearing System	Ball bearing or Sleeve
Insulation Resistance	10M ohm between leadwire and frame (500VDC)
Dielectric Strength	1 minute at 500 VAC, max leakage < 500 MicroAmp
Storage Temperature	-40C ~ +80C

Available Options:
Tachometer
Alarm
5V

Life Expectancy (L10)
Ball - 60,000 hrs (45C)
Sleeve - 30,000 hrs (45C)

Operating Temperature
Ball: -20C ~ +70C
Sleeve: -10C ~ +50C

Weight: ~0.14 lbs

m1

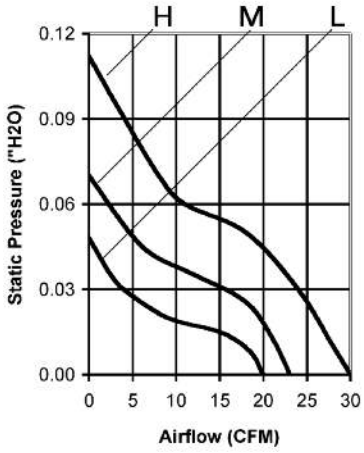

Model Number	Speed (RPM)	Airflow (CFM)	Noise (dB)	Volts DC	Voltage Range (VDC)	Amps	Max. Static Pressure ("H_2O)
OD8015-12H*	3,200	30	33	12	10.8~13.2	0.18	0.11
OD8015-12M*	2,500	23	26	12	10.8~13.2	0.12	0.07
OD8015-12L*	2,000	20	20	12	10.8~13.2	0.09	0.05
OD8015-24H*	3,200	30	33	24	22.6~26.4	0.10	0.11
OD8015-24M*	2,500	23	26	24	22.6~26.4	0.08	0.07

* Indicate "B" for ball bearing or "S" for sleeve bearing

OD8025 Series

DC Fan - 12, 24V
80 x 25mm (3.15" x 1.0")

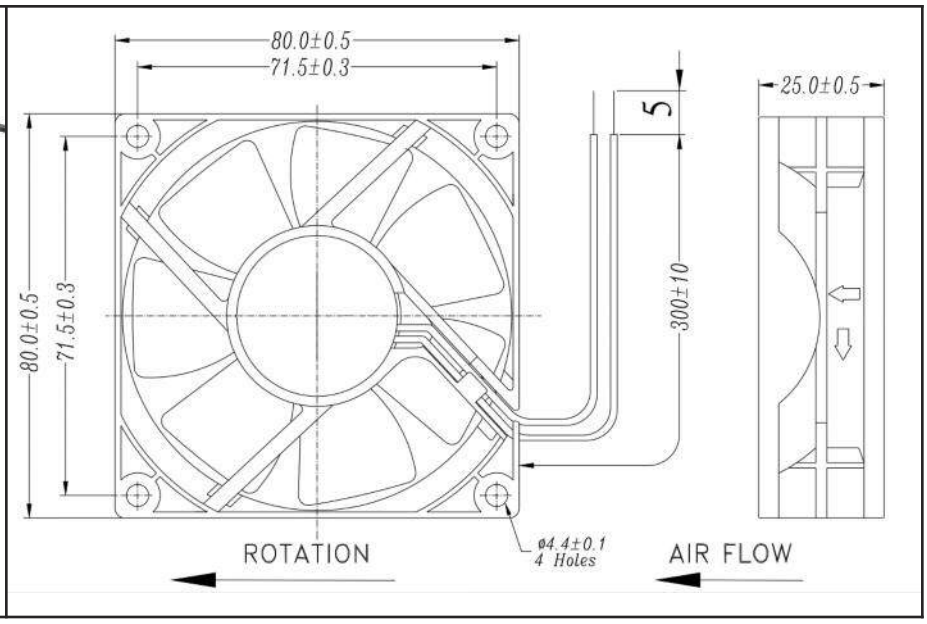

Frame & Impeller	PBT, UL94V-0 plastic
Connection	2x Lead wires 24AWG
Motor	Brushless DC, auto restart, polarity protected
Bearing System	Dual ball bearing
Insulation Resistance	10M ohm between leadwire and frame (500VDC)
Dielectric Strength	1 minute at 500 VAC, max leakage < 500 MicroAmp
Temperature Range	-20C ~ +75C
Storage Temperature	-40C ~ +80C

Available Options:
Tachometer (FG)
Alarm (RD)
Thermal Speed Control
PWM Input
Sleeve bearing
IP55
48V
5V

Life Expectancy (L10)
65,000 hours (45C)

Weight: ~ 0.19 lbs

m1

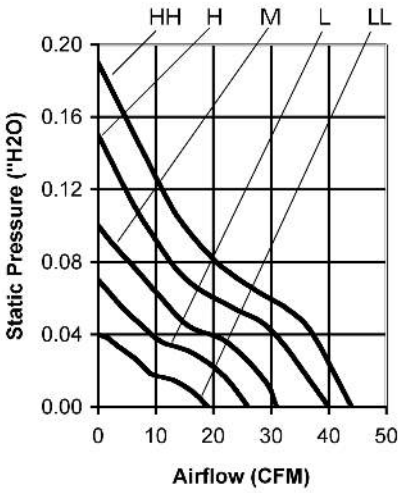

Model Number	Speed (RPM)	Airflow (CFM)	Noise (dB)	Volts DC	Input Power (Watts)	Amps	Max. Static Pressure ("H_2O)
OD8025-12HHB	3,400	44	40	12	3.11	0.26	0.19
OD8025-12HB	3,100	40	35	12	2.90	0.25	0.15
OD8025-12MB	2,500	31	28	12	1.45	0.15	0.10
OD8025-12LB	2,100	26	23	12	0.96	0.08	0.07
OD8025-12LLB	1,600	19	15	12	0.49	0.04	0.04
OD8025-24HB	3,100	40	35	24	2.41	0.11	0.16
OD8025-24MB	2,500	31	28	24	1.67	0.08	0.10
OD8025-24LB	2,100	26	23	24	0.96	0.05	0.07

To indicate sleeve bearing replace "B" suffix with "S" in part number (30,000 hrs life expectancy)
To indicate sealed sleeve bearing replace "B" with "SS" in part number (50,000 hrs life expectancy)

Knight Electronics, Inc.
10557 Metric Drive
Dallas, Texas 75243
214-340-0265

RoHS Compliant

Orion Fans
Information and data is subject to change without prior notification.

OD8032 Series

DC Fan - 12, 24, 48V
80 x 32mm (3.15" x 1.25")

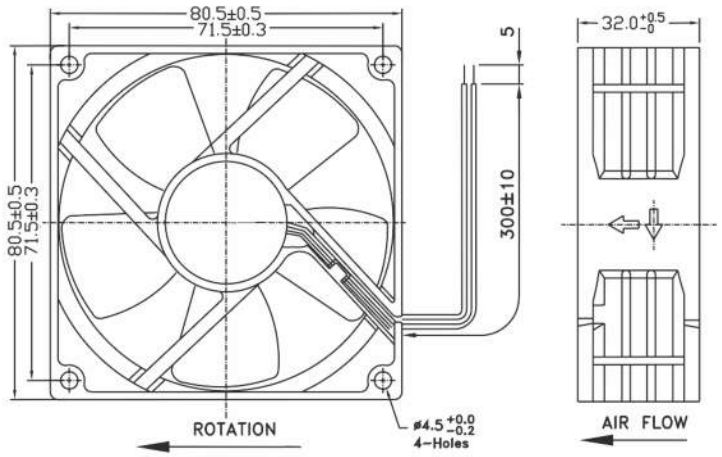

Frame & Impeller	PBT, UL94V-O plastic
Connection	2x Lead wires, UL 1007, 24AWG
Motor	Brushless DC, auto restart, polarity protected
Bearing System	Dual Ball or Sleeve
Insulation Resistance	10M ohm between leadwire and frame (500VDC)
Dielectric Strength	1 second at 500 VAC, max leakage - 500 MicroAmp
Storage Temperature	-40C ~ +80C

Available Options
Tachometer (FG)
Alarm (RD)
Thermal Speed Control (Thermistor)
PWM Input (Manual Speed Control)

Life Expectancy (L10)
Ball Bearing
70,000 hours (L10 at 40C)
Sleeve Bearing
35,000 hours (L10) at 40C)

Operating Temperature
Ball Bearing
-20C ~ +70C
Sleeve Bearing
-10C ~ +50C

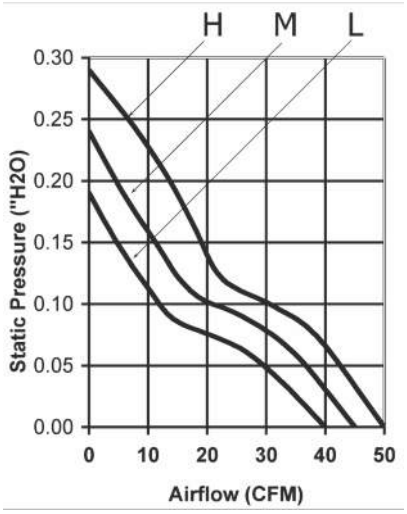

Model Number	Speed (RPM)	Airflow (CFM)	Noise (dB)	Volts DC	Voltage Range	Nominal Amps	Max. Static Pressure ("H_2O)
OD8032-12H*	3,800	50	42	12	10.8~13.2	0.19	0.29
OD8032-12M*	3,400	45	37	12	10.8~13.2	0.16	0.24
OD8032-12L*	3,000	40	35	12	10.8~13.2	0.11	0.19
OD8032-24H*	3,800	50	42	24	21.6~26.4	0.12	0.29
OD8032-24M*	3,400	45	37	24	21.6~26.4	0.10	0.24
OD8032-24L*	3,000	40	35	24	21.6~26.4	0.07	0.19
OD8032-48H*	3,800	50	42	48	24~56	0.08	0.29
OD8032-48M*	3,400	45	37	48	24~56	0.07	0.24
OD8032-48L*	3,000	40	35	48	24~56	0.06	0.19

* Indicate "B" to specify Ball bearing or "S" to specify Sleeve bearing

Knight Electronics, Inc.
10557 Metric Drive
Dallas, Texas 75243
214-340-0265

RoHS Compliant

Orion Fans
Information and data is subject to change without prior notification.

OD8038 Series

DC Fan - 12, 24V
80 x 38mm (3.15" x 1.5")

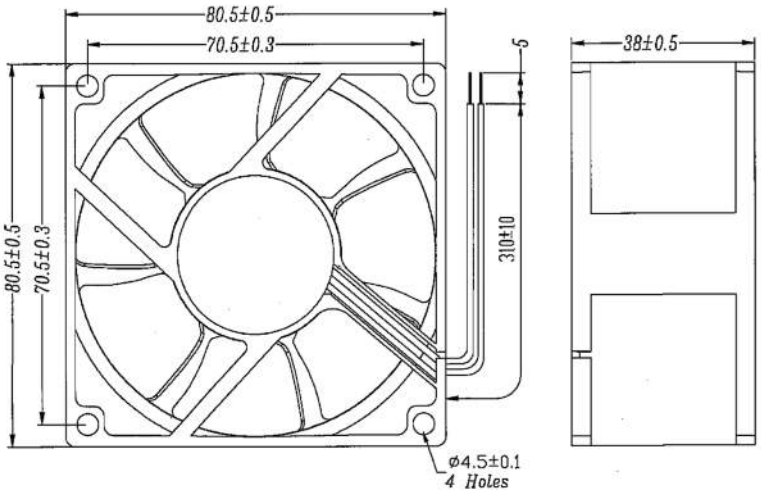

Frame & Impeller	PBT, UL94V-0 plastic
Connection	2x Lead wires, Red(+), Black (-)
Motor	Brushless DC, auto restart, polarity protected.
Bearing System	Dual ball bearing
Insulation Resistance	Min. 10M at 500VDC
Dielectric Strength	1 minute at 500 VAC, max leakage < 500 MicroAmp
Temperature Range	-20C ~ +75C
Storage Temperature	-40C ~ +80C

Options
Tachometer (FG)
Locked Rotor Alarm (RD)
Thermal Control
48V available

Weight: ~0.22 lbs.

Life Expectancy (L10)
50,000 hours (40C)

m1

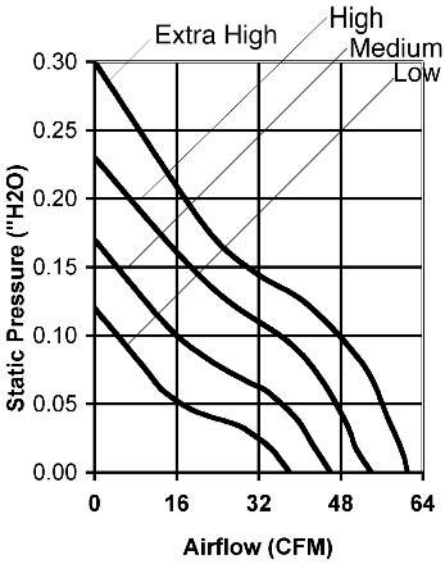

Model Number	Speed (RPM)	Airflow (CFM)	Noise (dB)	Volts DC	Input Power (Watts)	Amps	Max. Static Pressure ("H_2O)
OD8038-12HHB	4,000	61	44	12	6.2	0.52	0.30
OD8038-12HB	3,500	54	40	12	3.9	0.33	0.23
OD8038-12MB	3,000	46	36	12	2.5	0.21	0.17
OD8038-12LB	2,500	38	32	12	1.7	0.14	0.12
OD8038-24HB	3,500	54	40	24	5.8	0.14	0.23
OD8038-24MB	3,000	46	36	24	4.3	0.10	0.17
OD8038-24LB	2,500	38	32	24	3.4	0.08	0.12

Knight Electronics, Inc.
10557 Metric Drive
Dallas, Texas 75243
214-340-0265

RoHS Compliant

Orion Fans
Information and data is subject to change without prior notification.

OD8038 VA Series

Vaneaxial, High Pressure

DC Fan - 12, 24, 48V
80 x 38mm (3.15" x 1.5")

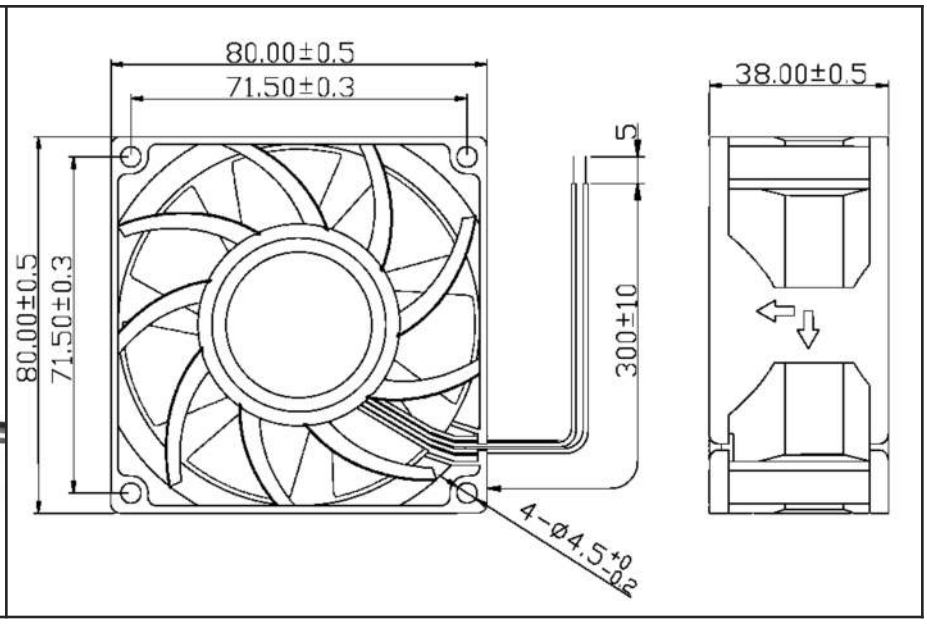

Frame & Impeller	PBT, UL94V-0 plastic
Connection	2x Lead wires, Red(+), Black (-)
Motor	Brushless DC, auto restart, polarity protected.
Bearing System	Dual ball bearing
Insulation Resistance	Min. 10M at 500VDC
Dielectric Strength	1 minute at 500 VAC, max leakage < 500 MicroAmp
Temperature Range	-20C ~ +75C
Storage Temperature	-40C ~ +80C

Options Available
Tachometer (FG)
Locked Rotor Alarm (RD)
Thermal Control
PWM
IP55

Life Expectancy (L10)
50,000 hours (40C)

Weight: ~0.40 lbs.

m1

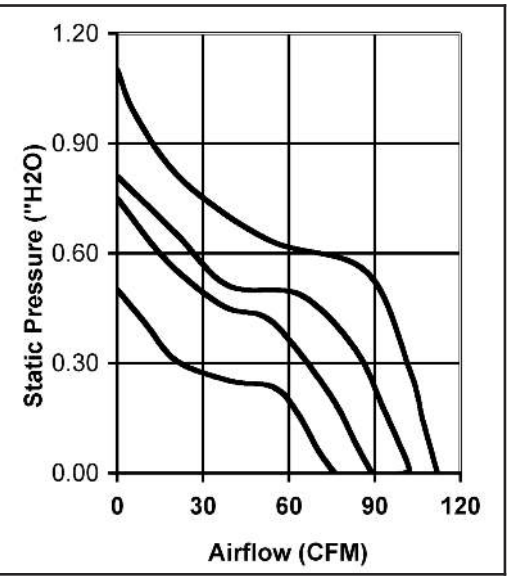

Model Number	Speed (RPM)	Airflow (CFM)	Noise (dB)	Volts DC	Input Power (Watts)	Amps	Max. Static Pressure ("H_2O)
OD8038-12HHBVXC	7,100	112	60	12	22	1.9	1.10
OD8038-12HBVXC	6,300	99	57	12	14	1.2	0.81
OD8038-12MBVXC	5,600	89	54	12	10	0.8	0.75
OD8038-12LBVXC	4,900	76	51	12	6	0.5	0.50
OD8038-24HBVXC	6,300	99	57	24	13	0.5	0.81
OD8038-24MBVXC	5,600	89	54	24	10	0.4	0.75
OD8038-24LBVXC	4,900	76	51	24	7	0.3	0.50
OD8038-48HBVXC	6,300	99	57	48	14	0.3	0.81
OD8038-48MBVXC	5,600	89	54	48	10	0.2	0.75
OD8038-48LBVXC	4,900	76	51	48	7	0.15	0.50

Knight Electronics, Inc.
10557 Metric Drive
Dallas, Texas 75243
214-340-0265

RoHS Compliant

Orion Fans
Information and data is subject to change without prior notification.

OD8038 XE Series

DC Fan 12V, 48V
80 x 38mm (3.15" x 1.5")

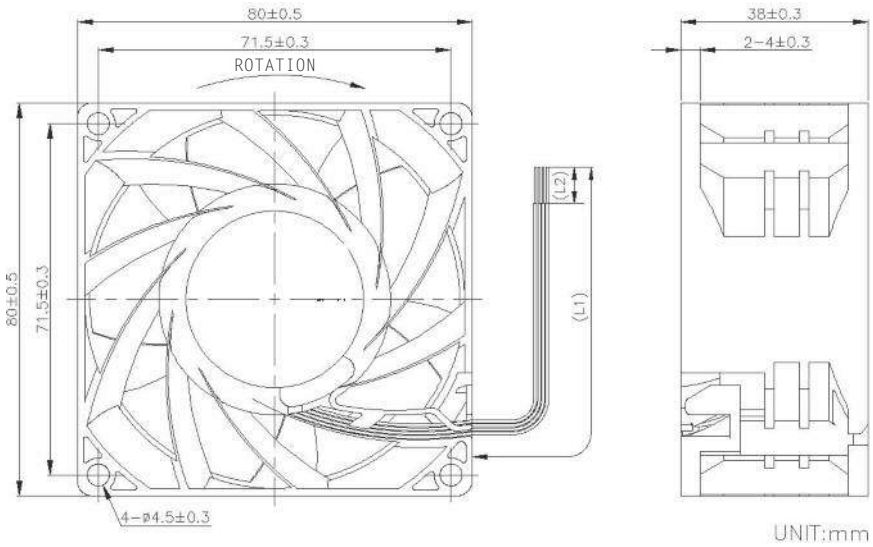

Frame & Impeller	PBT, UL94V-0 plastic
Connection	4x Lead wires *
Motor	Brushless DC, auto restart, polarity protected.
Bearing System	Dual ball bearing
Insulation Resistance	Min. 10M at 500VDC
Dielectric Strength	1 minute at 500 VAC, max leakage < 500 MicroAmp
Temperature Range	-10C ~ +70C
Storage Temperature	-40C ~ +80C
Life (L10)	70,000 hours (40C)

Available Options
Thermal Control

* Connection
Wire Leads - UL1430
24AWG
Red (+)
Black (-)
White Tachometer
Blue PWM

Weight: ~ .48 lbs.

m1

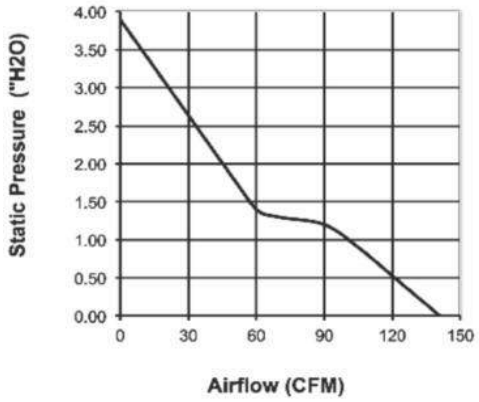

Part Number	Speed (RPM)	Airflow (CFM)	Noise Level (dB)	Nominal Voltage	Voltage Range V DC	Rated Current	Rated Power	Max. Static Pressure ("H_2O)
OD8038-12HBXE10A	13,500	141	71	12 V DC	8 ~ 13.2	4.10 A	49 W	3.9
OD8038-48HBXE10A	13,500	141	71	48 V DC	28 ~ 56	1.14 A	55 W	3.9

OD9220 Series

DC Fan - 12, 24V
92 x 20mm (3.6" x 0.79")

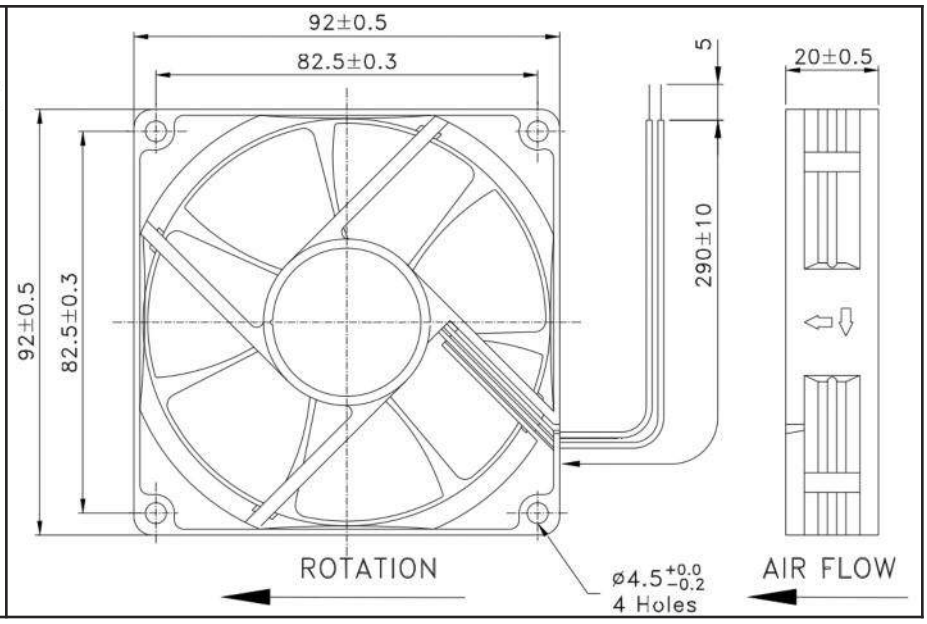

Frame & Impeller	PBT, UL94V-0 plastic
Connection	2x Lead wires 24AWG
Motor	Brushless DC, auto restart, polarity protected
Bearing System	Dual ball bearing
Insulation Resistance	10M ohm between leadwire and frame (500VDC)
Dielectric Strength	1 minute at 500 VAC, max leakage < 500 MicroAmp
Temperature Range	-20C ~ +75C
Storage Temperature	-40C ~ +80C

Available Options

Tachometer - Open Collector
Locked Rotor Alarm

Weight: ~0.19 lbs

Life Expectancy (L10)
65,000 hours (45C)

m1

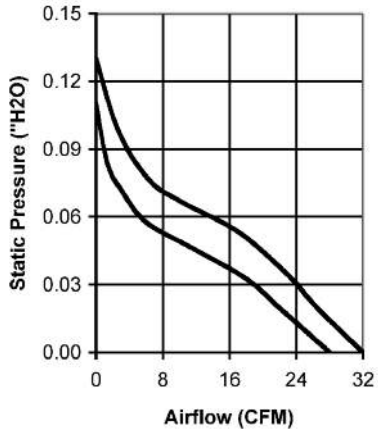

Model Number	Speed (RPM)	Airflow (CFM)	Noise (dB)	Volts DC	Input Power (Watts)	Amps	Max. Static Pressure ("H_2O)
OD9220-12H*	2,700	32	33	12	8~16	0.25	0.13
OD9220-12M*	2,400	28	31	12	8~16	0.16	0.11
OD9220-24H*	2,700	32	33	24	22~28	0.14	0.13
OD9220-24M*	2,400	28	31	24	22~28	0.12	0.11

* Indicate "B" to specify Ball bearing or "S" to specify Sleeve bearing

Knight Electronics, Inc.
10557 Metric Drive
Dallas, Texas 75243
214-340-0265

RoHS Compliant

Orion Fans
Information and data is subject to change without prior notification.

OD9225 Series

DC Fan - 12, 24, 48V
92 x 25 (3.62" x 1.00")

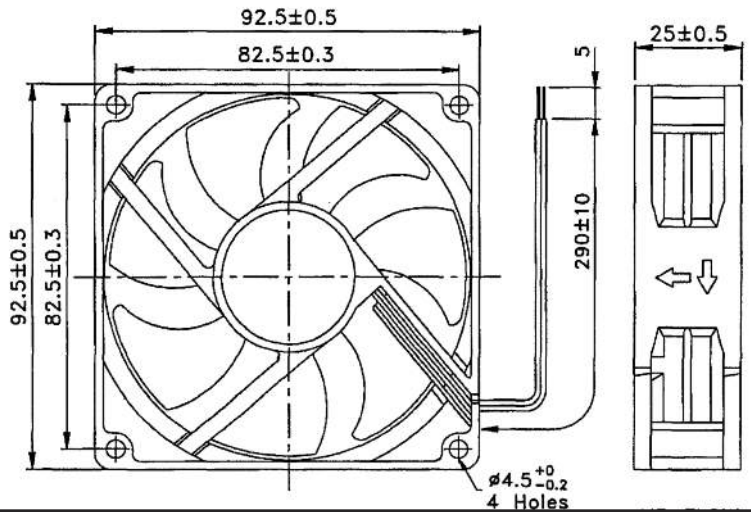

Frame & Impeller	PBT, UL94V-0 plastic
Connection	2x Lead wires
Motor	Brushless DC, auto restart, polarity protected
Bearing System	Dual Ball
Insulation Resistance	10M ohm between leadwire and frame (500VDC)
Dielectric Strength	1 minute at 500 VAC, max leakage < 500 MicroAmp
Storage Temperature	-40C ~ +80C

Available Options:
Tachometer (FG)
Alarm (RD)
Thermal Control
Sleeve Bearing
05V
IP55

Life Expectancy (L10)
Ball Bearing
60,000 hours (L10 at 40C)

Operating Temperature
Ball Bearing
-20C ~ +75C

Weight: ~0.22 lbs
m1

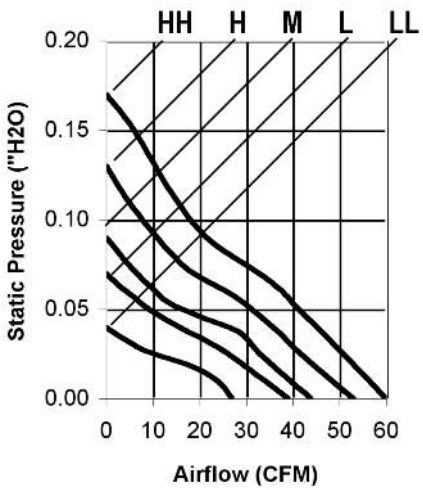

Model Number	Speed (RPM)	Airflow (CFM)	Noise (dB)	Volts DC	Voltage Range	Amps	Max. Static Pressure ("H_2O)
OD9225-12HHB	3,300	60	40	12	10.8~13.2	0.29	0.17
OD9225-12HB	2,900	53	35	12	10.8~13.2	0.24	0.13
OD9225-12MB	2,400	44	31	12	10.8~13.2	0.15	0.09
OD9225-12LB	2,100	39	28	12	10.8~13.2	0.10	0.07
OD9225-12LLB	1,600	27	18	12	10.8~13.2	0.07	0.04
OD9225-24HB	2,900	53	35	24	22.6~26.4	0.14	0.13
OD9225-24MB	2,400	44	31	24	22.6~26.4	0.09	0.09
OD9225-24LB	2,100	39	28	24	22.6~26.4	0.05	0.07
OD9225-48HB	2,800	50	33	48	43.2~52.8	0.09	0.24

To indicate sleeve bearing replace "B" suffix with "S" in part number (30,000 hrs life expectancy)
To indicate sealed sleeve bearing replace "B" with "SS" in part number (50,000 hrs life expectancy)

Knight Electronics, Inc.
10557 Metric Drive
Dallas, Texas 75243
214-340-0265

RoHS Compliant

Orion Fans
Information and data is subject to change without prior notification.

OD9238 Series

DC FAN, 12VDC
92 x 38mm (3.62" x 1.5")

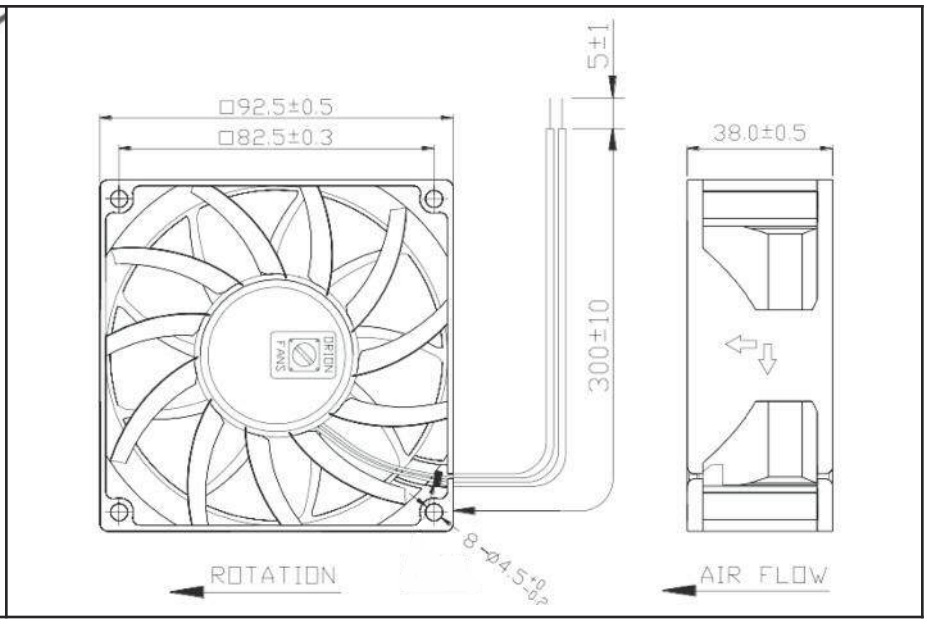

Frame & Impeller	PBT, UL94V-0 plastic
Connection	2x Lead wires *
Motor	Brushless DC, auto restart, polarity protected.
Bearing System	Dual ball bearing
Insulation Resistance	Min. 10M at 500VDC
Dielectric Strength	1 second at 500VAC max leakage 500 microamp
Temperature Range	-10C ~ +70C
Storage Temperature	-40C ~ +80C
Life (L10)	70,000 hours (40C)

Available Options

IP55
Other speeds and voltages
Alarm
PWM
Tachometer

*Connection:
Wire Leads - UL1007
24AWG Red(+), Black(-)

Weight: .46 lbs.

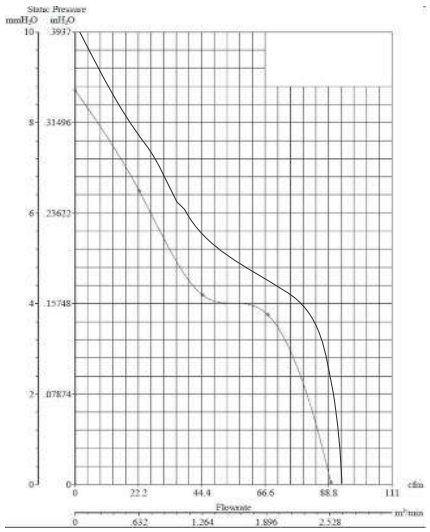

Model Number	Part Number	Speed (RPM)	Airflow (CFM)	Noise (dB)	Volts DC	Voltage Range	Nominal Current	Input Power (Watts)	Max. Static Pressure ("H_2O)
OD9238-12MB	196131001	3,600	90	47	12	7~13.2 VDC	.45 A	12	.34
OD9238-24HB	196241001	4,000	90	50	24	17~26.4 VDC	.28 A	13.2	.40

Knight Electronics, Inc.
10557 Metric Drive
Dallas, Texas 75243
214-340-0265

RoHS Compliant

Orion Fans
Information and data is subject to change without prior notification.

OD9238 VA Series

Vaneaxial, High Pressure

DC Fan - 12, 24, 48V
92 x 38mm (3.62" x 1.5")

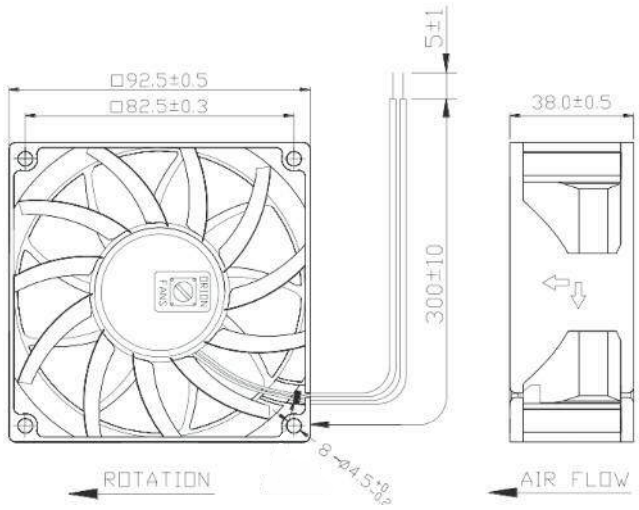

Frame & Impeller	PBT, UL94V-0 plastic
Connection	2x Lead wires, 290mm, UL1007, AWG 24
Motor	Brushless DC, auto restart, polarity protected.
Bearing System	Dual ball bearing
Insulation Resistance	Min. 10M at 500VDC
Dielectric Strength	1 minute at 500 VAC, max leakage < 500 MicroAmp
Temperature Range	-20C ~ +75C
Storage Temperature	-40C ~ +80C

Available Options:
IP55
Tachometer (FG)
Alarm
PWM
Super High Speed (150CFM)

Life Expectancy (L10)
75,000 hours (40C)

Weight: ~0.42 lbs.

m1

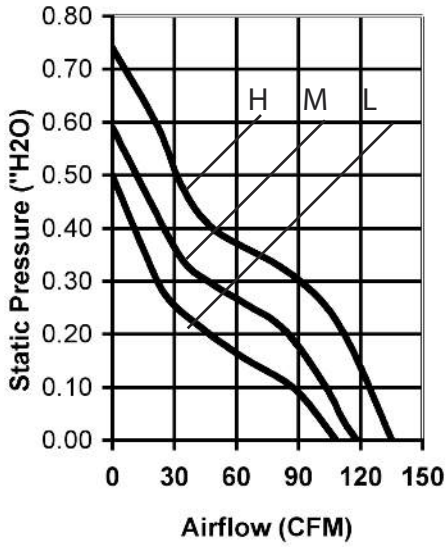

Model Number	Speed (RPM)	Airflow (CFM)	Noise (dB)	Volts DC	Input Power (Watts)	Amps	Max. Static Pressure ("H_2O)
OD9238-12HBVXC	5,400	135	58	12	16	1.3	0.74
OD9238-12MBVXC	4,800	118	55	12	11	0.9	0.59
OD9238-12LBVXC	4,400	108	52	12	9	0.7	0.50
OD9238-24HBVXC	5,400	135	58	24	16	0.7	0.74
OD9238-24MBVXC	4,800	118	55	24	11	0.5	0.59
OD9238-24LBVXC	4,400	108	52	24	8	0.3	0.50
OD9238-48HBVXC	5,400	135	58	48	17	0.4	0.74
OD9238-48MBVXC	4,800	118	55	48	12	0.3	0.59
OD9238-48LBVXC	4,400	108	52	48	9	0.2	0.50

Knight Electronics, Inc.
10557 Metric Drive
Dallas, Texas 75243
214-340-0265

RoHS Compliant

Orion Fans
Information and data is subject to change without prior notification.

OD9238 XC Series

DC Fan - 12V, Tachometer, PWM
92 x 38mm (3.62" x 1.5")

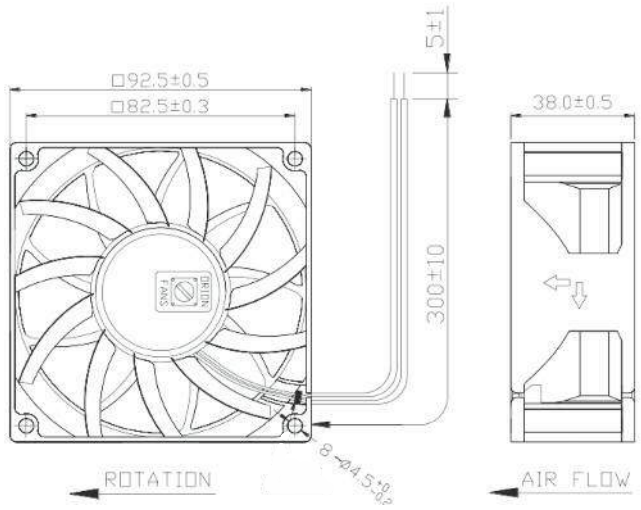

Frame & Impeller	PBT, UL94V-0 plastic
Connection	4x Lead wires
Motor	Brushless DC, auto restart, polarity protected.
Bearing System	Dual ball bearing
Insulation Resistance	Min. 10M at 500VDC
Dielectric Strength	1 minute at 500 VAC, max leakage < 500 MicroAmp
Temperature Range	-20C ~ +70C
Storage Temperature	-40C ~ +80C
Life Expectancy	50,000 hours (40C)

Available Options:

*Connection:
Red (+)
Black (-)
White - Tachometer
Open Collector
Blue - PWM

UL1430, 24AWG
~300mm

Weight: ~ .56 lbs.

m1

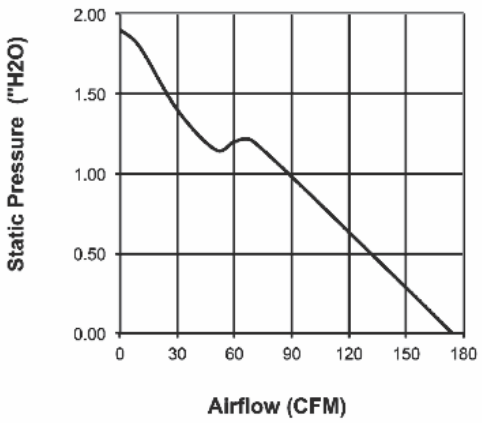

Part Number	OD9238-12HHBXC10A
Nominal Voltage	12 VDC
Nominal Current	3.5 A
Rated Power	42 W
Rated Speed (RPM)	8,000
Airflow (CFM)	174
Noise Level (dB)	68
Max. Static Pressure	1.7 "H_2O

PWM Duty Cycle	0%	40%	70%	100%
Ref. Speed (RPM)	0	3200 ± 15%	5600 ± 12%	8000 ± 10%

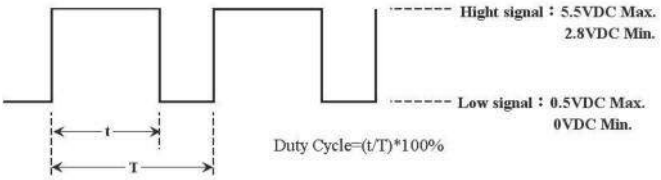

11.1 The preferred operating frequency for the fan is 25kHz.
11.2 PWM signal frequency range from 18kHz~30kHz.
11.3 At 100% duty cycle, the fan will operate at maximum speed.
11.4 At 0% duty cycle, the fan is not rotate.
11.5 The fan will default to operate at maximum speed when the speed control input is left connected.
11.6 At 25kHz with 20% duty cycle (Vcc = 24VDC), the fan will be able to start from a dead stop.

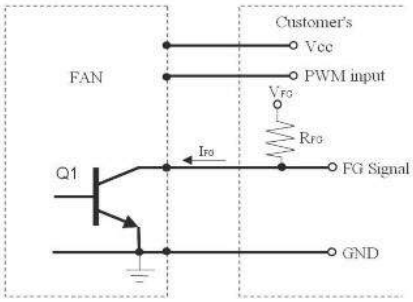

Knight Electronics, Inc.
10557 Metric Drive
Dallas, Texas 75243
214-340-0265

RoHS Compliant

Orion Fans
Information and data is subject to change without prior notification.

OD1225 Series

DC Fan - 12V, 24V
120 x 25mm (4.7" x 1.0")

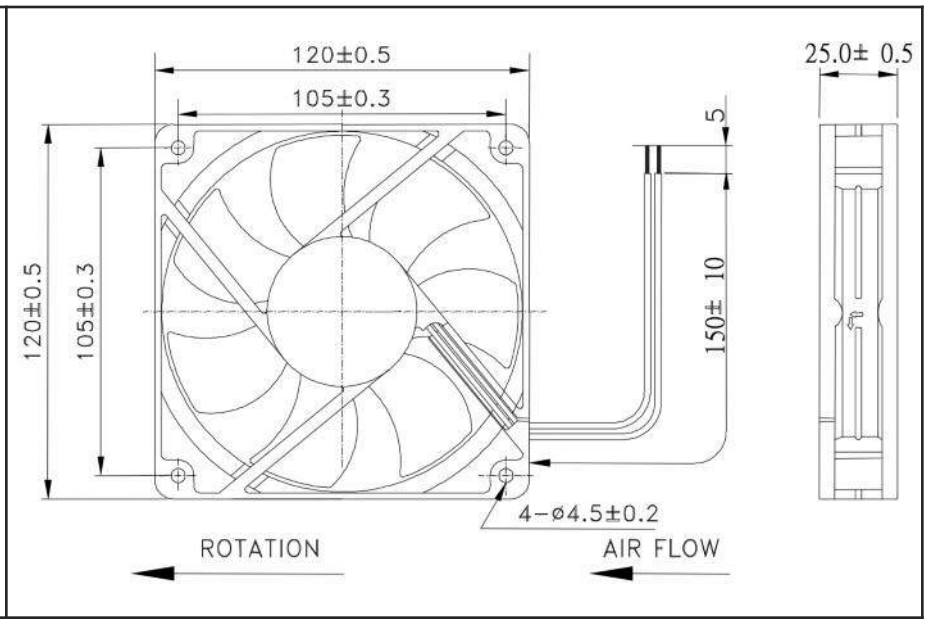

Frame & Impeller	PBT, UL94V-0 plastic
Connection	2x Lead wires 24AWG
Motor	Brushless DC, auto restart, polarity protected
Bearing System	Dual ball bearing
Insulation Resistance	10M ohm between leadwire and frame (500VDC)
Dielectric Strength	1 minute at 500 VAC, max leakage < 500 MicroAmp
Temperature Range	-20C ~ +75C
Storage Temperature	-40C ~ +80C

Available Options

Tachometer,
Alarm,
Thermal control
IP55 Rated
48V

Life Expectancy (L10)
65,000 hours (45C)

Weight: ~0.35 lbs

m1

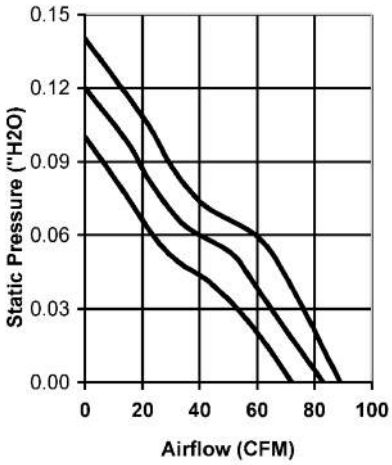

Model Number	Speed (RPM)	Airflow (CFM)	Noise (dB)	Volts DC	Input Power (Watts)	Amps (max)	Max. Static Pressure ("H_2O)
OD1225-12HB	2,200	89	39	12	5	0.37	0.14
OD1225-12MB	2,050	83	38	12	4	0.33	0.12
OD1225-12LB	1,800	72	34	12	3	0.24	0.10
OD1225-24HB	2,200	89	39	24	5	0.19	0.14
OD1225-24MB	2,050	83	38	24	4	0.17	0.12
OD1225-24LB	1,800	72	34	24	3	0.14	0.10

* Indicate "B" to specify Ball bearing or "S" to specify Sleeve bearing

Knight Electronics, Inc.
10557 Metric Drive
Dallas, Texas 75243
214-340-0265

RoHS Compliant

Orion Fans
Information and data is subject to change without prior notification.

OD1232 Series

DC Fan - 12, 24, 48V
120 x 32mm (4.7" x 1.25")

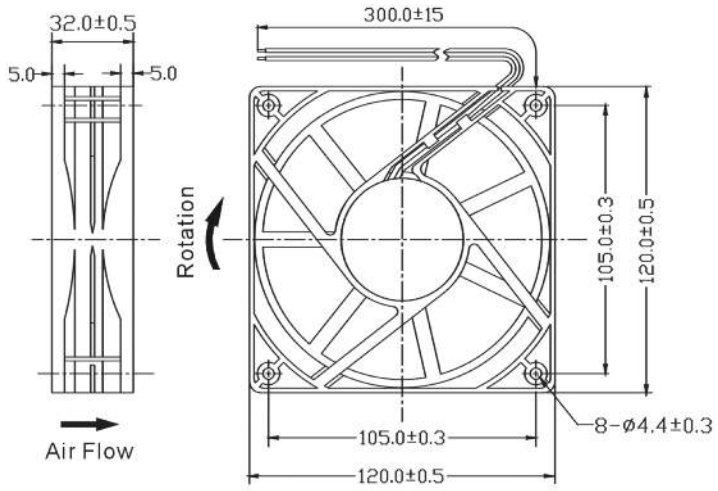

Frame & Impeller	PBT, UL94V-0 plastic
Connection	2x Lead wires
Motor	Brushless DC, auto restart, polarity protected
Bearing System	Dual Ball or Sleeve
Insulation Resistance	10M ohm between leadwire and frame (500VDC)
Dielectric Strength	1 minute at 500 VAC, max leakage < 500 MicroAmp
Storage Temperature	-40C ~ +80C

Available Options:
Tachometer (FG)
Alarm (RD)
Thermal Speed Control
PWM Input

Life Expectancy (L10)
Ball Bearing
60,000 hours (L10 at 40C)
Sleeve Bearing
30,000 hours (L10 at 40C)

Operating Temperature
Ball Bearing
-20C ~ +75C
Sleeve Bearing
-10C ~ +50C

Weight: ~0.47 lbs

m4

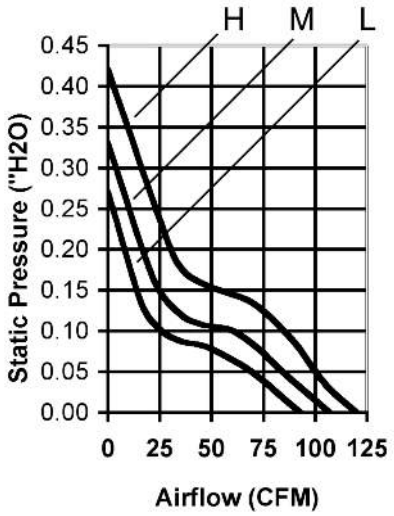

Model Number	Speed (RPM)	Airflow (CFM)	Noise (dB)	Volts DC	Voltage Range	Amps	Max. Static Pressure ("H_2O)
OD1232-12H *	3,750	120	51	12	6~13.8	0.60	0.42
OD1232-12M *	3,300	107	48	12	6~13.8	0.50	0.33
OD1232-12L *	2,900	93	44	12	6~13.8	0.32	0.27
OD1232-24H *	3,750	120	51	24	12~27.8	0.28	0.42
OD1232-24M *	3,300	107	48	24	12~27.8	0.22	0.33
OD1232-24L *	2,900	93	44	24	12~27.8	0.16	0.27
OD1232-48H *	3,750	120	51	48	24~55.2	0.16	0.42
OD1232-48M *	3,300	107	48	48	24~55.2	0.15	0.33
OD1232-48L *	2,900	93	44	48	24~55.2	0.13	0.27

* Indicate "B" to specify Ball bearing or "S" to specify Sleeve bearing

Knight Electronics, Inc.
10557 Metric Drive
Dallas, Texas 75243
214-340-0265

RoHS Compliant

Orion Fans
Information and data is subject to change without prior notification.

OD1238 Series

DC Fan - 12, 24, 48V
120 x 38mm (4.7" x 1.5")

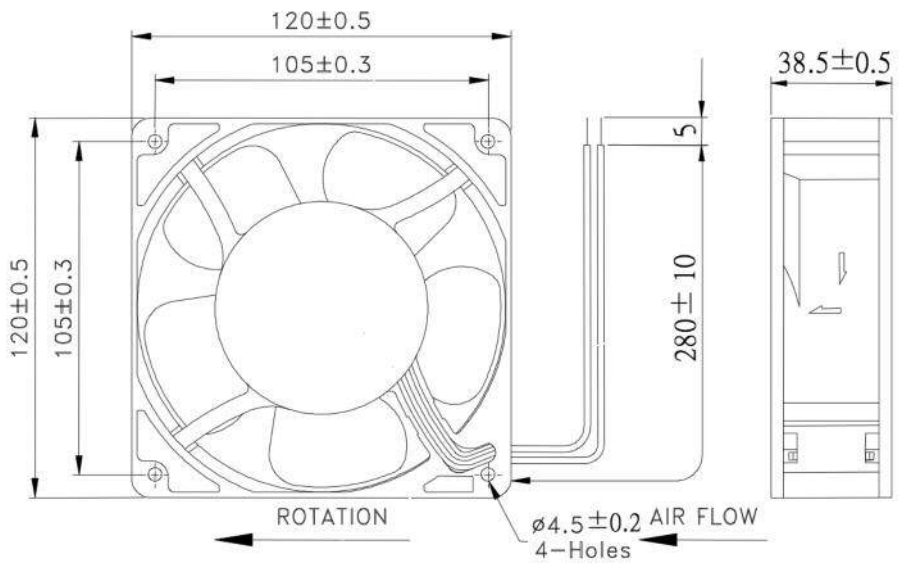

Frame & Impeller	PBT, UL94V-0 plastic
Connection	2x Lead wires 24AWG
Motor	Brushless DC, auto restart, polarity and IC protected
Bearing System	Dual ball bearing
Insulation Resistance	10M ohm between leadwire and frame (500VDC)
Dielectric Strength	1 minute at 500 VAC, max leakage < 500 MicroAmp
Temperature Range	-20C ~ +75C
Storage Temperature	-40C ~ +80C

Available Options
Tachometer
Alarm
PWM
Thermal control
IP55
Sleeve Bearing

Life Expectancy (L10)
65,000 hours (45C)

Weight: ~0.72 lbs

m1

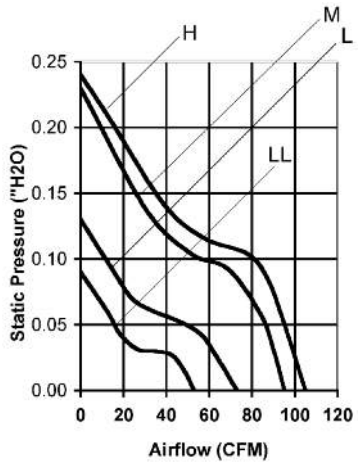

Model Number	Speed (RPM)	Airflow (CFM)	Noise (dB)	Volts DC	Input Power (Watts)	Amps	Max. Static Pressure ("H_2O)
OD1238-12HB	2,800	105	43	12	6	0.50	0.24
OD1238-12MB	2,540	95	41	12	4	0.35	0.23
OD1238-12LB	1,950	73	33	12	3	0.24	0.13
OD1238-12LLB	1,500	53	27	12	2	0.16	0.09
OD1238-24HB	2,800	105	43	24	7	0.32	0.24
OD1238-24MB	2,540	95	41	24	6	0.23	0.23
OD1238-24LB	1,950	73	33	24	4	0.14	0.13
OD1238-48HB	2,800	105	43	48	10	0.20	0.24
OD1238-48MB	2,540	95	41	48	7	0.14	0.23
OD1238-48LB	1,950	73	33	48	5	0.10	0.13
OD1238-48LLB	1,500	53	27	48	4	0.08	0.09

Knight Electronics, Inc.
10557 Metric Drive
Dallas, Texas 75243
214-340-0265

RoHS Compliant

Orion Fans
Information and data is subject to change without prior notification.

OD1238 Series

DC Fan - Super High Speed
120 x 38mm (4.7" x 1.5")

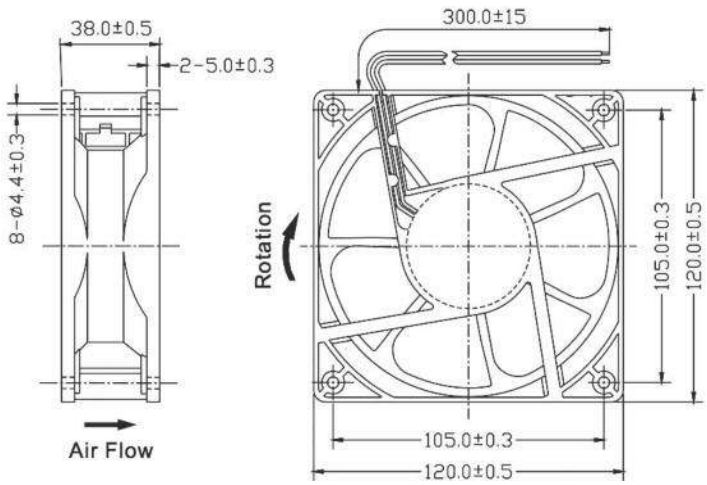

Frame & Impeller	PBT, UL94V-O plastic
Connection	2x Lead wires 22AWG
Motor	Brushless DC, auto restart, polarity protected
Bearing System	Dual ball bearing
Insulation Resistance	10M ohm between leadwire and frame (500VDC)
Dielectric Strength	1 second at 500 VAC, max leakage - 500 MicroAmp
Temperature Range	-20C ~ +75C
Life (10)	65,000 hours (45C)

Available Options

Tachometer (Frequency Generator)

Alarm (Rotation Detector)

Thermistor (Thermal Speed Control)

Sleeve Bearing

Weight ~ 0.74 lbs.

m4

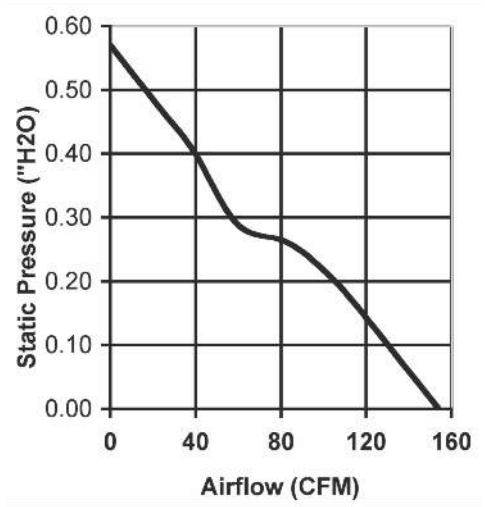

Model Number	Speed (RPM)	Airflow (CFM)	Noise (dB)	Volts DC	Voltage Range (VDC)	Amps	Max. Static Pressure ("H_2O)
OD1238-12HHB	3,800	154	52	12	6 ~ 14	1.30	0.57
OD1238-24HHB	3,800	154	52	24	12 ~ 28	0.60	0.57
OD1238-48HHB	3,800	154	52	48	24 ~ 55	0.35	0.57

Knight Electronics, Inc.
10557 Metric Drive
Dallas, Texas 75243
214-340-0265

RoHS Compliant

Orion Fans
Information and data is subject to change without prior notification.

OD1238 XC Series

High Performance DC Fan 12, 24, 48V
120x38mm (4.7"x 1.5")

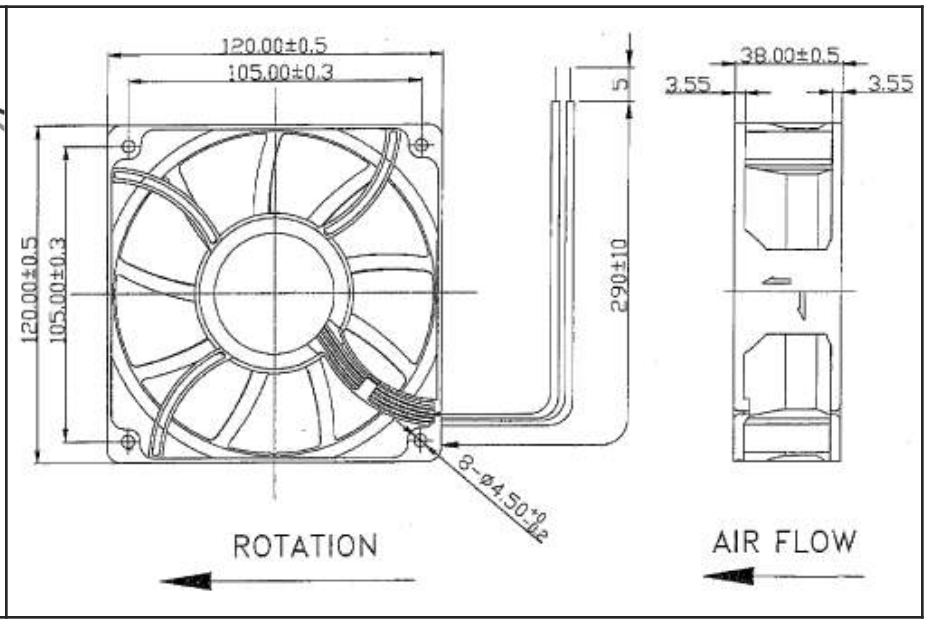

Frame & Impeller	PBT, UL94V-0 plastic
Connection	2x Lead wires 24AWG
Motor	Brushless DC, auto restart, polarity protected
Bearing System	Dual ball bearing
Insulation Resistance	10M ohm between leadwire and frame (500VDC)
Dielectric Strength	1 minute at 500 VAC, max leakage < 500 MicroAmp
Temperature Range	-20C ~ +75C
Storage Temperature	-40C ~ +80C

Available Options:
Tachometer
Alarm
Thermal Speed Control
PWM
IP55

Life Expectancy (L10)
65,000 hours (45C)

Weight: ~0.74 lbs

m1

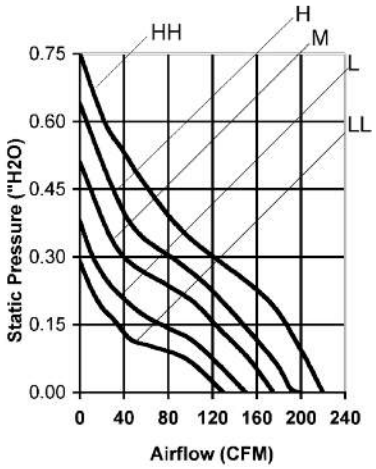

Model Number	Speed (RPM)	Airflow (CFM)	Noise (dB)	Volts DC	Input Power (Watts)	Amps	Max. Static Pressure ("H_2O)
OD1238-12HBXC	4,300	200	61	12	23	1.95	0.64
OD1238-12MBXC	3,800	175	57	12	18	1.50	0.51
OD1238-12LBXC	3,200	150	52	12	10	0.87	0.38
OD1238-24HBXC	4,300	200	61	24	19	0.98	0.64
OD1238-24MBXC	3,800	175	57	24	16	0.68	0.51
OD1238-24LBXC	3,200	150	52	24	9	0.42	0.38
OD1238-24LLBXC	2,800	130	48	24	7	0.30	0.29
OD1238-48HHBXC	4,700	220	63	48	32	0.68	0.75
OD1238-48HBXC	4,300	200	61	48	25	0.52	0.64
OD1238-48MBXC	3,800	175	57	48	17	0.36	0.51
OD1238-48LBXC	3,200	150	52	48	11	0.22	0.38
OD1238-48LLBXC	2,800	130	48	48	9	0.18	0.29

Knight Electronics, Inc.
10557 Metric Drive
Dallas, Texas 75243
214-340-0265

RoHS Compliant

Orion Fans
Information and data is subject to change without prior notification.

OD1238 VA Series
DC Fan Vane Axial High Pressure

High Performance DC Fan 12, 24, 48V
120 x 38mm (4.7" x 1.5")

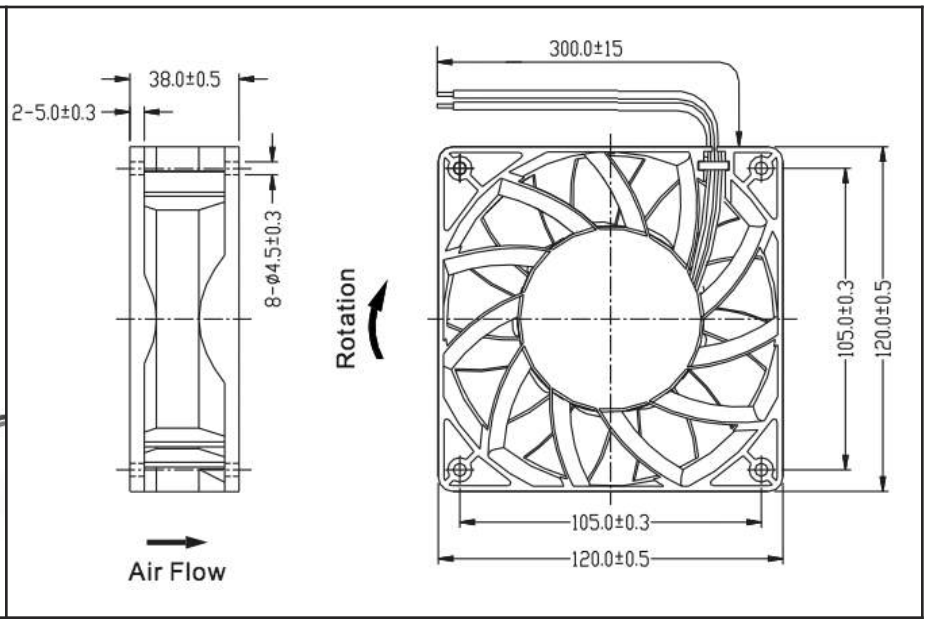

Frame & Impeller	PBT, UL94V-0 plastic
Connection	2x Lead wires 24AWG
Motor	Brushless DC, auto restart, polarity protected
Bearing System	Dual ball bearing
Insulation Resistance	10M ohm between leadwire and frame (500VDC)
Dielectric Strength	1 minute at 500 VAC, max leakage < 500 MicroAmp
Temperature Range	-20C ~ +75C
Storage Temperature	-40C ~ +80C

Available Options:
Tachometer
Alarm
Thermal Speed Control
PWM
IP55
Salt Fog

Life Expectancy (L10)
65,000 hours (45C)

Weight: ~0.78 lbs

m4

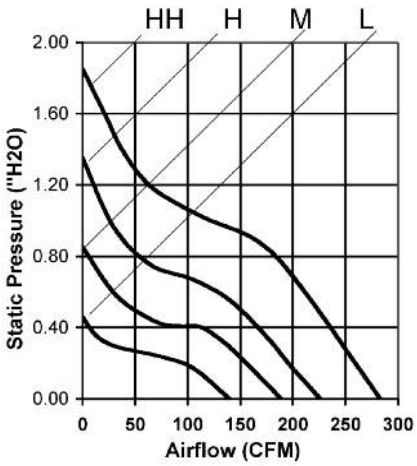

Model Number	Speed (RPM)	Airflow (CFM)	Noise (dB)	Volts DC	Voltage Range	Amps	Max. Static Pressure ("H_2O)
OD1238-12HBVXC	5,000	226	65	12	6~14	3.6	1.35
OD1238-12MBVXC	4,000	189	59	12	6~14	2.0	0.85
OD1238-12LBVXC	3,000	140	52	12	6~14	1.5	0.46
OD1238-24HBVXC	5,000	226	65	24	12~28	1.7	1.35
OD1238-24MBVXC	4,000	189	59	24	12~28	1.1	0.85
OD1238-24LBVXC	3,000	140	52	24	12~28	0.6	0.46
OD1238-48HHBVXC	6,000	283	70	48	24~55	1.3	1.85
OD1238-48HBVXC	5,000	226	65	48	24~55	1.0	1.35
OD1238-48MBVXC	4,000	189	59	48	24~55	0.6	0.85
OD1238-48LBVXC	3,000	140	52	48	24~55	0.4	0.46

Knight Electronics, Inc.
10557 Metric Drive
Dallas, Texas 75243
214-340-0265

RoHS Compliant

Orion Fans
Information and data is subject to change without prior notification.

OD1238 XJ Series

DC Fan - 12V, 24V
120 x 38mm (4.7" x 1.5")

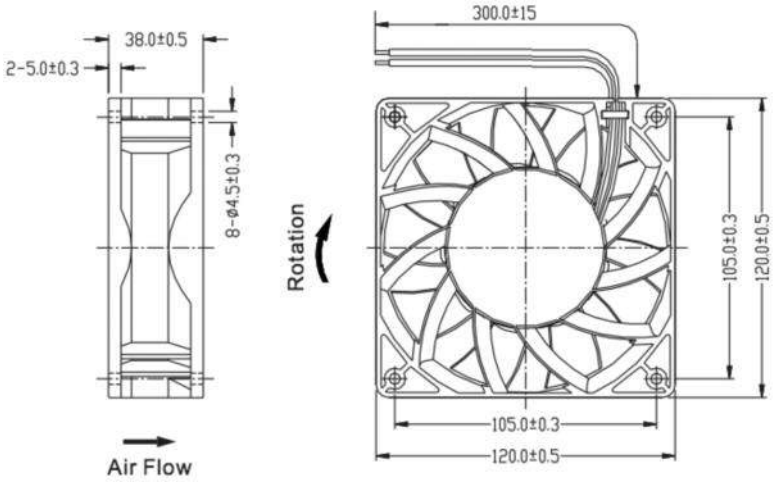

Frame & Impeller	PBT, UL94V-0 plastic
Connection	2x Lead wires
Motor	Brushless DC, auto restart, polarity protected.
Bearing System	Dual ball bearing
Insulation Resistance	Min. 10M at 500VDC
Dielectric Strength	1 minute at 500 VAC, max leakage < 500 MicroAmp
Temperature Range	-10C ~ +70C
Storage Temperature	-40C ~ +80C
Life Expectancy	70,000 hours (40C)

Available Options:

*Connection:
Red (+)
Black (-)

UL1430, 24AWG
~300mm

Weight: ~ .83 lbs.

Tachometer - Open Collector PWM

m1

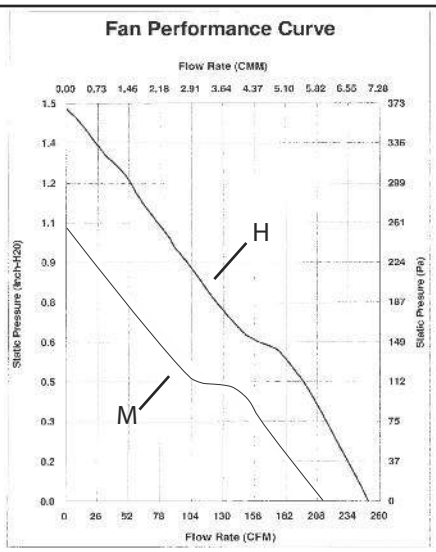

Part Number	Speed (RPM)	Airflow (CFM)	Noise (dB)	Nominal Voltage	Voltage Range (VDC)	Rated Power (Watt)	Rated Current	Max. Static Pressure ("H_2O)
OD1238-12HBXJ	6,000	250	69	12 V DC	7 ~ 13.2	44.4	3.70 A	1.48" H_2O
OD1238-24HBXJ	6,000	250	69	24 V DC	17 ~ 26.4	42	1.75 A	1.48" H_2O
OD1238-12MBXJ	5,000	207	63	12 V DC	7 ~ 13.2	27.6	2.30 A	1.04" H_2O

OD127AP Series

DC Fan - Aluminum Frame 12, 25, 48V
127 x 38.5mm (5.0" x 1.5")

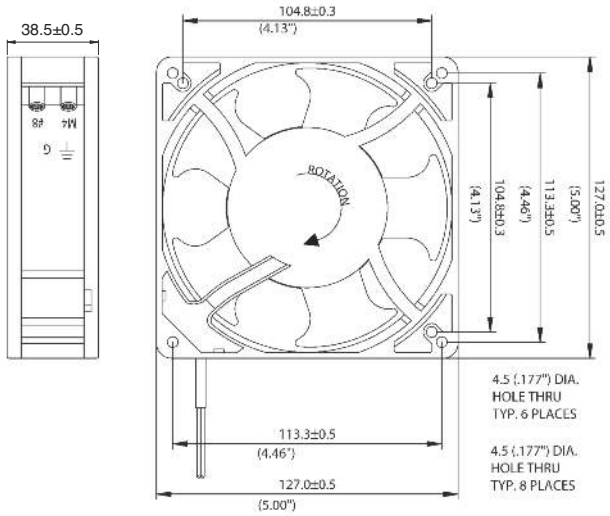

Frame	Diecast Aluminum
Impeller	PBT, UL94V-0 plastic
Connection	2x Lead wires or terminals
Motor	Brushless DC, auto restart, polarity protected
Bearing System	Dual Ball bearing
Insulation Resistance	10M ohm between leadwire and frame (500VDC)
Dielectric Strength	1 minute at 500 VAC, max leakage < 500 MicroAmp
Storage Temperature	-40C ~ +80C

Available Options:
Tachometer (FG)
Alarm (RD)
Thermal Speed Control
PWM Input
Sleeve bearing

Life Expectancy (L10)
Ball - 60,000 hrs (45C)

Operating Temperature
Ball: -20 ~ +75C

Weight: ~0.93 lbs

m0

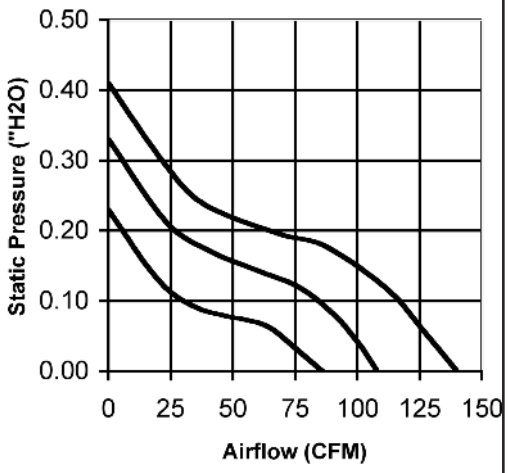

Model Number	Speed (RPM)	Airflow (CFM)	Noise (dB)	Volts DC	Voltage Range	Amps	Max. Static Pressure ("H_2O)
OD127AP-12HB	3,200	140	46	12	9~13.8	0.88	0.41
OD127AP-12MB	2,600	108	38	12	9~13.8	0.50	0.33
OD127AP-12LB	1,900	86	30	12	9~13.8	0.20	0.23
OD127AP-24HB	3,000	140	46	24	12~27.6	0.43	0.41
OD127AP-24MB	2,600	108	38	24	12~27.6	0.23	0.33
OD127AP-24LB	1,900	86	30	24	12~27.6	0.15	0.23
OD127AP-48HB	3,200	140	46	48	26~56	0.22	0.41
OD127AP-48MB	2,600	108	38	48	26~56	0.10	0.33
OD127AP-48LB	1,900	86	30	48	26~56	0.07	0.33

Knight Electronics, Inc.
10557 Metric Drive
Dallas, Texas 75243
214-340-0265

RoHS Compliant

Orion Fans
Information and data is subject to change without prior notification.

OD127 Series

DC Fan - 12, 24, 48V
127 x 38.5mm (5.0" x 1.5")

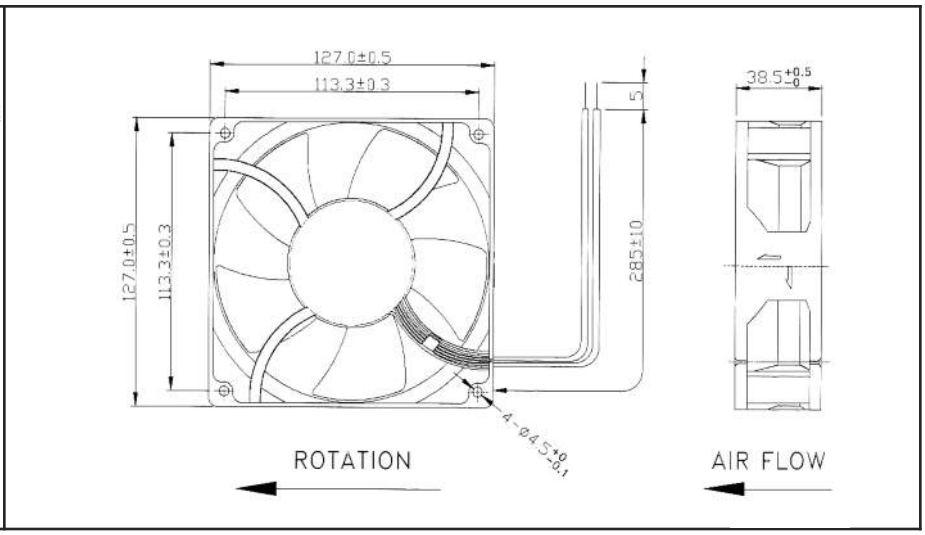

Frame & Impeller	PBT, UL94V-0 plastic
Connection	2x Lead wires
Motor	Brushless DC, auto restart, polarity protected
Bearing System	Dual Ball bearing
Insulation Resistance	10M ohm between leadwire and frame (500VDC)
Dielectric Strength	1 minute at 500 VAC, max leakage < 500 MicroAmp
Storage Temperature	-40C ~ +80C

Available Options:
Tachometer
Alarm
Thermal Speed Control
PWM Input

Life Expectancy (L10)
Ball - 60,000 hrs (45C)

Operating Temperature
Ball: -20 ~ 75C

Weight: ~.82 lbs

m1

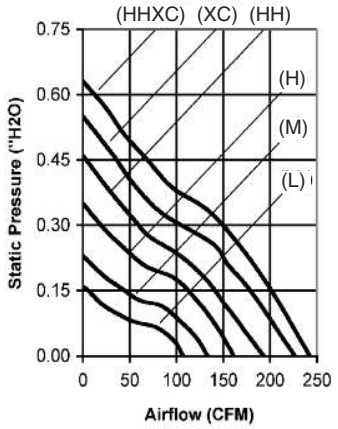

Model Number	Speed (RPM)	Airflow (CFM)	Noise (dB)	Volts DC	Voltage Range	Amps	Max. Static Pressure ("H_2O)
OD127-12HHB	3,500	193	56	12	8~14	1.2	0.46
OD127-12HB	2,950	161	53	12	8~14	0.78	0.35
OD127-24HHB	3,500	193	56	24	11~28	0.60	0.46
OD127-24HB	2,950	161	53	24	11~28	0.41	0.35
OD127-48HHBXC	4,500	242	64	48	22~55	0.70	0.63
OD127-48HBXC	4,100	226	63	48	22~55	0.55	0.55
OD127-48HHB	3,500	193	56	48	22~55	0.34	0.46
OD127-48HB	2,950	161	53	48	22~55	0.23	0.35
OD127-48LB	2,500	133	48	48	22~55	0.17	0.23
OD127-48LLB	2,000	107	41	48	22~55	0.12	0.16

Knight Electronics, Inc.
10557 Metric Drive
Dallas, Texas 75243
214-340-0265

RoHS Compliant

Orion Fans
Information and data is subject to change without prior notification.

OD172SAPL Series

DC Fan - 12, 24, 48V
172 x 150x38mm (6.7" x 5.9"x 1.5")

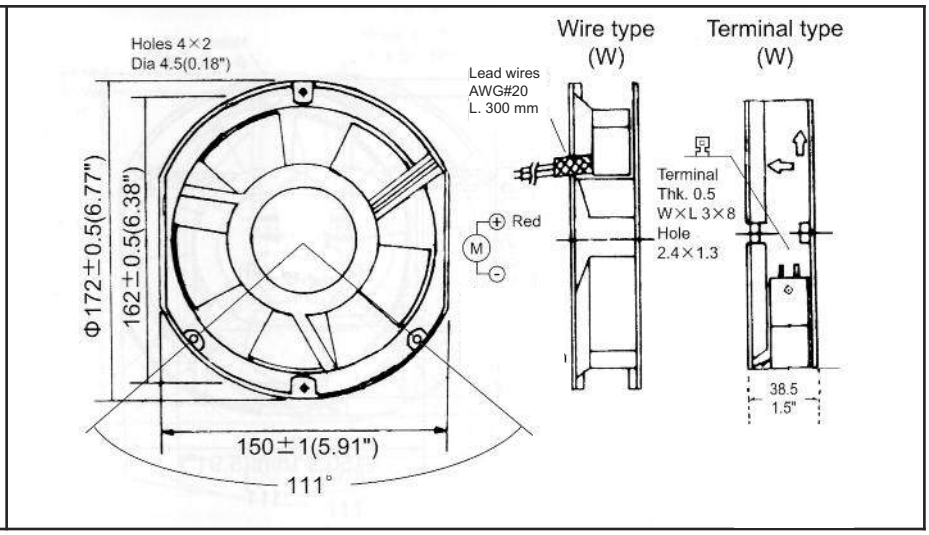

Frame	Diecast Aluminum
Impeller	PBT, UL94V-0 plastic
Connection	2x Lead wires, AWG20 or terminals
Motor	Brushless DC, auto restart, polarity protected
Bearing System	Dual ball bearing
Insulation Resistance	10M ohm between leadwire and frame (500VDC)
Dielectric Strength	1 minute at 500 VAC, max leakage < 500 MicroAmp
Storage Temperature	-40C ~ +80C

Available Options:
Tachometer
Alarm
Thermistor Speed Control
PWM Speed Control
Constant Speed

Life Expectancy (L10)
Ball - 60,000 hrs (45C)

Operating Temperature
Ball: -20C ~ +75C

Weight: ~1.7 lbs

m0

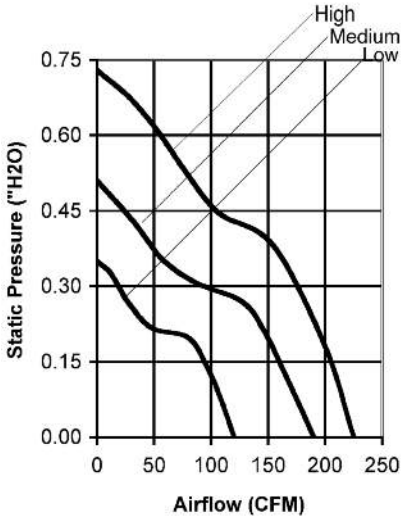

Model Number	Speed (RPM)	Airflow (CFM)	Noise (dB)	Volts DC	Voltage Range	Amps	Max. Static Pressure ("H_2O)
OD172SAPL-12H *	4,000	225	55	12	7~14	1.99	0.73
OD172SAPL-12M *	3,300	190	45	12	7~14	1.10	0.51
OD172SAPL-12L *	2,000	120	40	12	7~14	0.45	0.35
OD172SAPL-24H *	4,000	225	55	24	15~27	0.97	0.73
OD172SAPL-24M *	2,800	190	45	24	15~27	0.52	0.51
OD172SAPL-24L *	2,000	120	40	24	15~27	0.20	0.35
OD172SAPL-48H *	4,000	225	55	48	28~53	0.48	0.73
OD172SAPL-48M *	2,800	190	45	48	28~53	0.30	0.51
OD172SAPL-48L *	2,000	120	40	48	28~53	0.12	0.35

* Indicate "B" for wire leads or "TB" for Terminals

Knight Electronics, Inc.
10557 Metric Drive
Dallas, Texas 75243
214-340-0265

RoHS Compliant

Orion Fans
Information and data is subject to change without prior notification.

OD172S Series

DC Fan - 12, 24, 48V
172 x 150 x 51mm (6.7” x 5.9” x 2.0”)

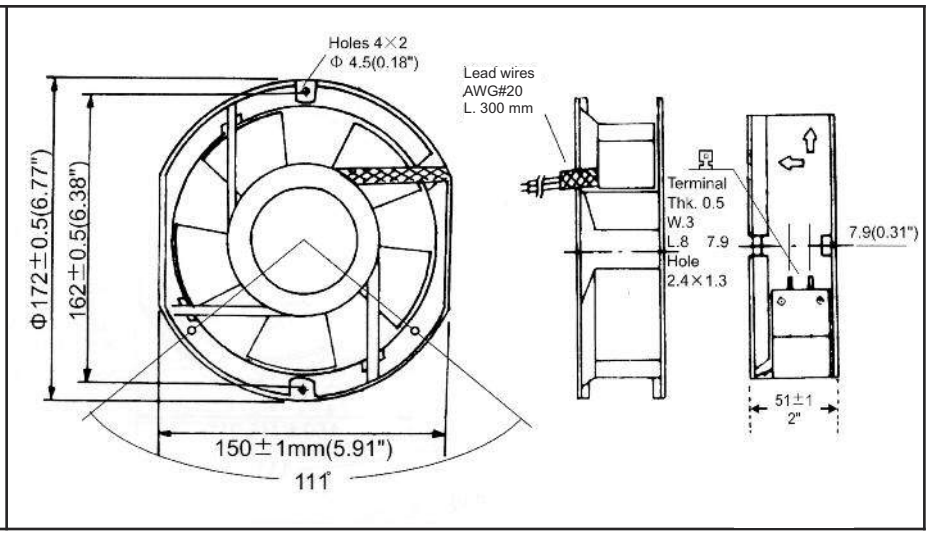

Frame	Diecast Aluminum
Impeller	PBT, UL94V-0 plastic
Connection	2x Lead wires, AWG20 or terminals
Motor	Brushless DC, auto restart, polarity protected
Bearing System	Dual ball bearing
Insulation Resistance	10M ohm between leadwire and frame (500VDC)
Dielectric Strength	1 minute at 500 VAC, max leakage < 500 MicroAmp
Storage Temperature	-40C ~ +80C

Available Options:
Tachometer
Alarm
Thermistor Speed Control
PWM Speed Control

Life Expectancy (L10)
Ball - 40,000 hrs (60C)

Operating Temperature
Ball: -20C ~ +75C

Weight: ~1.8 lbs

m0

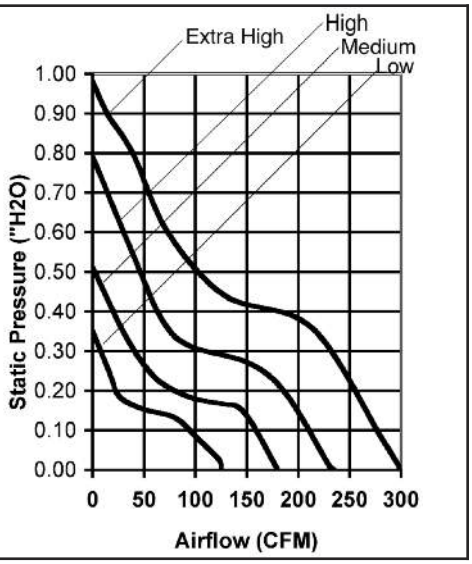

Model Number	Speed (RPM)	Airflow (CFM)	Noise (dB)	Volts DC	Voltage Range	Amps	Max. Static Pressure (“H_2O)
OD172SAP-12HH *	3,800	290	56	12	8~14	2.90	0.93
OD172SAP-12H *	3,200	230	52	12	8~14	1.90	0.75
OD172SAP-12M *	2,500	180	42	12	8~14	1.10	0.51
OD172SAP-12L *	1,600	125	32	12	8~14	0.45	0.35
OD172SAP-24HH *	3,900	300	57	24	15~28	1.40	0.98
OD172SAP-24H *	3,300	235	52	24	15~28	0.97	0.79
OD172SAP-24M *	2,500	180	42	24	15~28	0.52	0.51
OD172SAP-24L *	1,600	125	32	24	15~28	0.20	0.35
OD172SAP-48HH *	3,900	300	57	48	22~53	0.69	0.98
OD172SAP-48H *	3,300	235	52	48	22~53	0.48	0.79
OD172SAP-48M *	2,500	180	42	48	22~53	0.30	0.51
OD172SAP-48L *	1,600	125	32	48	22~53	0.12	0.35

* Indicate “B” for wire leads or “TB” for Terminals

Knight Electronics, Inc.
10557 Metric Drive
Dallas, Texas 75243
214-340-0265

RoHS Compliant

Orion Fans
Information and data is subject to change without prior notification.

OD172S XC Series

DC Fan - High Performance 12, 24 48V
172x150x51mm (6.7"x 5.9"x 2.0")

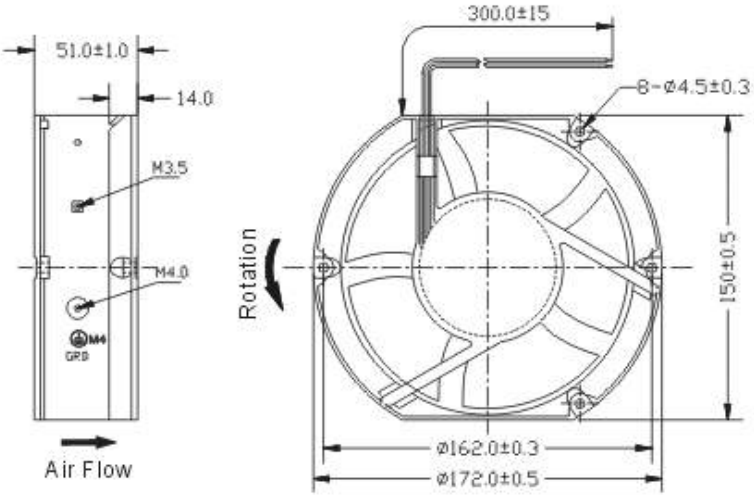

Frame	Diecast Aluminum
Impeller	PBT, UL94V-2 plastic
Connection	2x Lead wires, AWG22
Motor	Brushless DC, auto restart, polarity protected
Bearing System	Dual ball bearing
Insulation Resistance	10M ohm between leadwire and frame (500VDC)
Dielectric Strength	1 minute at 500 VAC, max leakage < 500 MicroAmp
Storage Temperature	-40C ~ +80C

Available Options:
Alarm
Tachometer
PWM

Temperature Range
-20C ~ +75C

Life Expectancy (L10)
65,000 hrs (45C)

Weight: ~1.63 lbs

m4

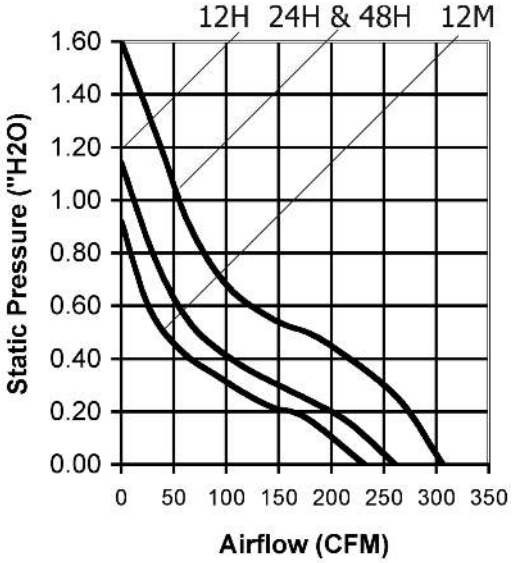

Model Number	Speed (RPM)	Airflow (CFM)	Noise (dB)	Volts DC	Voltage Range	Amps	Max. Static Pressure ("H_2O)
OD172SAP-12HBXC	3,900	277	62	12	9~14	3.50	1.14
OD172SAP-12MBXC	3,400	232	59	12	9~14	2.40	0.92
OD172SAP-24HBXC	4,600	307	67	24	12~28	2.30	1.60
OD172SAP-48HBXC	4,600	307	67	48	24~55	1.20	1.60

OD180APL Series

DC Fan - 12, 24, 48V
180 x 65mm (7.1" x 2.6")

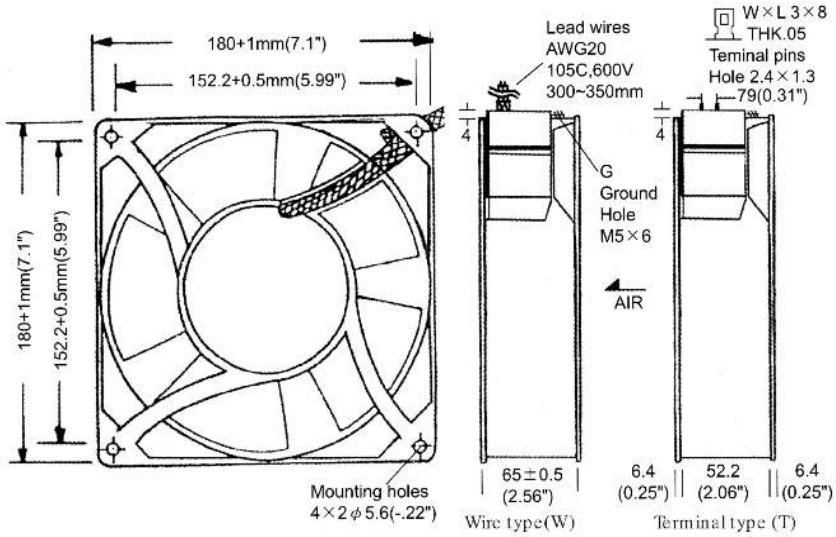

Frame & Impeller	Diecast Aluminum (Frame) PBT, UL94V-0 - (Impeller)
Connection	2x Lead wires 20AWG or ter-minals
Motor	Brushless DC, auto restart, rotor lock & polarity protected
Bearing System	Dual ball bearing
Insulation Resistance	10M ohm between leadwire and frame (500VDC)
Dielectric Strength	1 minute at 500 VAC, max leakage < 500 MicroAmp
Temperature Range	-20C ~ +75C
Storage Temperature	-20 ~ +80C

Available Options:

Alarm
Tachometer
PWM
Thermal Control

Life Expectancy (L10)
60,000 hrs (40C)

Weight: ~3.2 lbs

m0

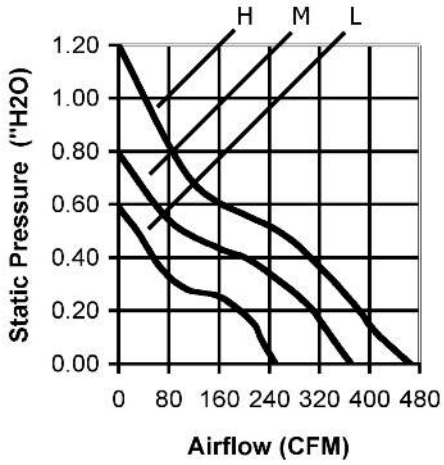

Model Number	Speed (RPM)	Airflow (CFM)	Noise (dB)	Volts DC	Input Power (Watts)	Amps	Max. Static Pressure ("H_2O)
OD180APL-12H*B	3,400	460	63	12	50.4	4.20	1.10
OD180APL-12M*B	2,800	375	53	12	23	1.90	0.70
OD180APL-12L*B	2,200	300	46	12	13.2	1.10	0.58
OD180APL-24H*B	3,500	470	65	24	50.4	2.10	1.20
OD180APL-24M*B	2,800	375	53	24	24	0.97	0.70
OD180APL-24L*B	2,200	300	46	24	13	0.52	0.58
OD180APL-48H*B	3,500	470	65	48	49.4	1.03	1.20
OD180APL-48M*B	2,800	375	53	48	23.5	0.48	0.70
OD180APL-48L*B	2,200	300	46	48	14.5	0.30	0.58

* Insert letter "T" to indicate terminal type.

Knight Electronics, Inc.
10557 Metric Drive
Dallas, Texas 75243
214-340-0265

RoHS Compliant

Orion Fans
Information and data is subject to change without prior notification.

OD254 Series

DC Fan - 12, 24, 48V
254x89mm (10.0"x 3.50")

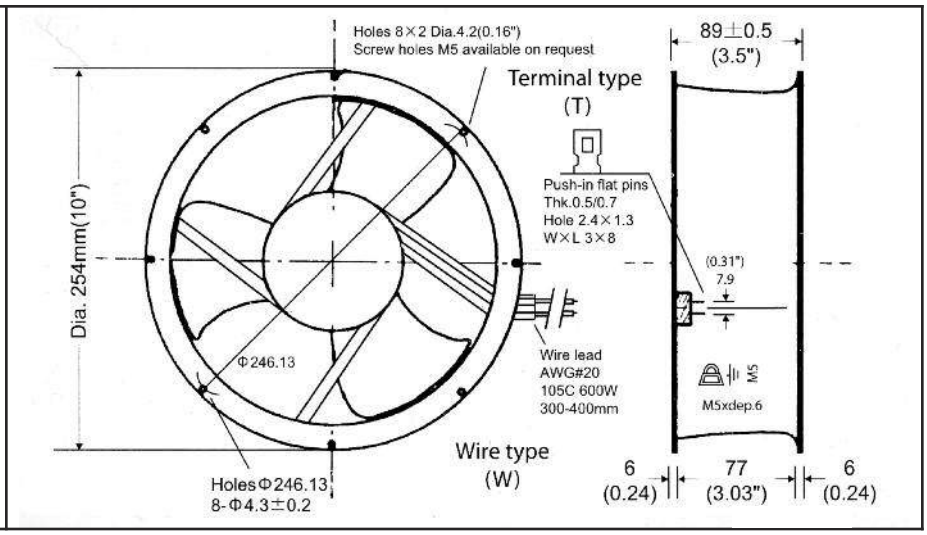

Frame	Diecast Aluminum
Impeller	PBT, UL94V-0 plastic
Connection	2x Lead wires 20AWG or terminals
Motor	Brushless DC, auto restart, impedance and polarity protected
Bearing System	Ball bearing
Insulation Resistance	10M ohm between leadwire and frame (500VDC)
Dielectric Strength	1 second at 500 VAC, max leakage < 500 MicroAmp
Storage Temperature	-40C ~ +90C

Available Options:
Tachometer
Alarm
Thermistor Speed Control
PWM Speed Control

Life Expectancy (L10)
Ball - 40,000 hrs (60C)

Operating Temperature
Ball: -20C ~ +75C

Weight: ~4.0 lbs

m0

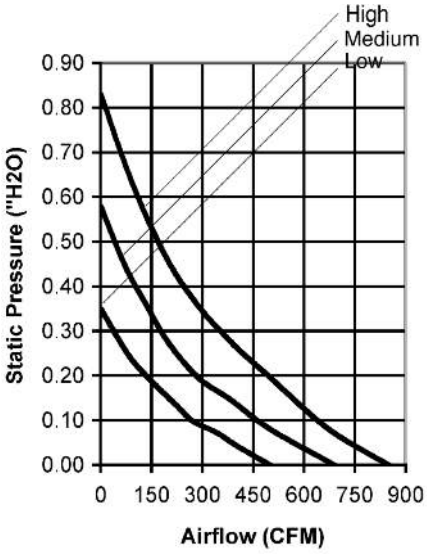

Model Number	Speed (RPM)	Airflow (CFM)	Noise (dB)	Volts DC	Voltage Range (VDC)	Input Power (Watt)	Amps	Max. Static Pressure ("H_2O)
OD254AP-12H *	2,400	830	60	12	9~13	65	5.4	0.78
OD254AP-12M *	2,000	690	47	12	9~13	23	1.9	0.58
OD254AP-12L *	1,650	550	39	12	8~14	13	1.1	0.37
OD254AP-24H *	2,500	850	64	24	16~27	64	2.65	0.83
OD254AP-24M *	2,000	690	47	24	16~27	24	0.97	0.58
OD254AP-24L *	1,500	550	39	24	16~27	13	0.52	0.37
OD254AP-48H *	2,500	850	64	48	24~53	62	1.3	0.83
OD254AP-48M *	2,000	690	47	48	24~53	24	0.48	0.58
OD254AP-48L *	1,500	550	39	48	24~56	15	0.30	0.37

* Indicate "B" for wire leads or "TB" for Terminals

Knight Electronics, Inc.
10557 Metric Drive
Dallas, Texas 75243
214-340-0265

RoHS Compliant

Orion Fans
Information and data is subject to change without prior notification.

OD280 Series

DC Fan - 12, 24, 48V
280x89mm (11.0”x 3.50”)

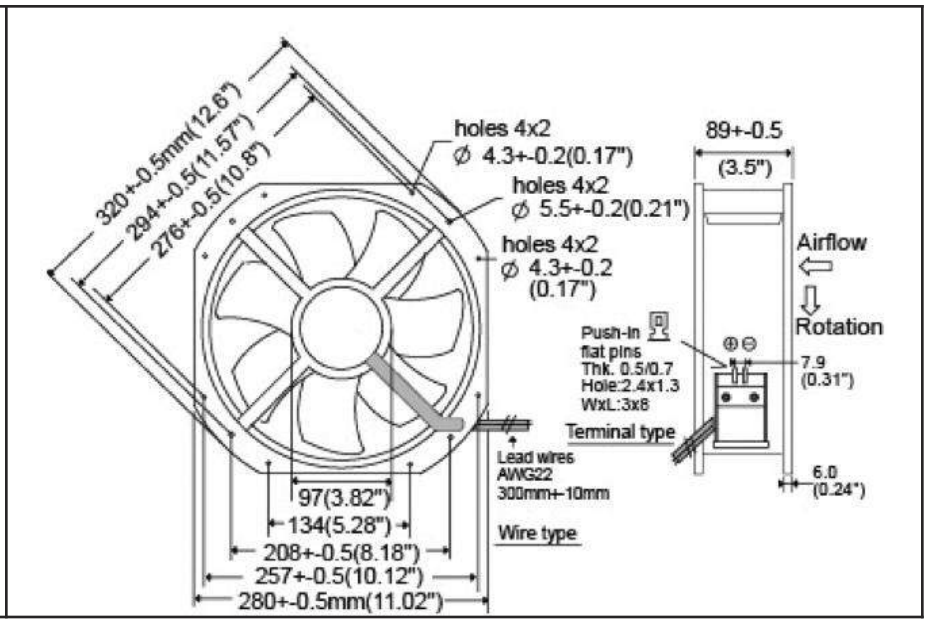

Frame	Diecast Aluminum
Impeller	Glass Fiber reinforced thermoplastic.
Connection	Terminals or lead wires
Motor	Programmable microprocessor control Brushless DC, Locked rotor and polarity protected.
Bearing System	Dual ball
Storage Temperature	-25 ~ +80C
Dielectric Strength	1 minute at 500 VAC, max leakage < 500 MicroAmp

Available Options:
PWM
Tachometer
Alarm
Thermistor

Operating Temperature
Ball Bearing
-15C ~ +65C

Life Expectancy
Ball Bearing
85,000 hours (L10 at 35C)

Weight: ~6.8 lbs.

m0

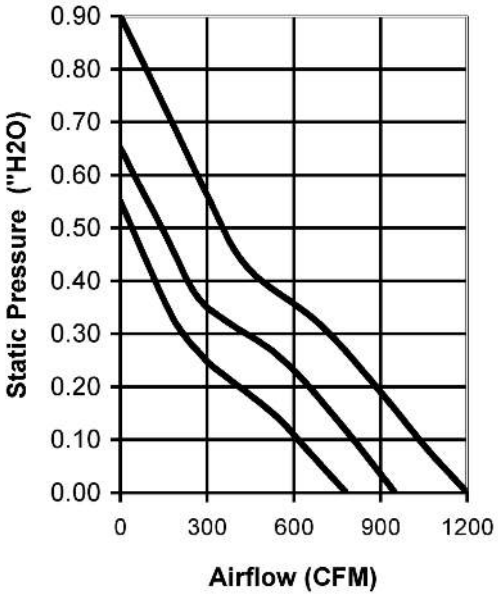

Model Number	Speed (RPM)	Airflow (CFM)	Noise (dB)	Volts DC	Voltage Range	Watts	Max. Static Pressure (“H_2O)
OD280-12HB	2,550	1,200	72	12	9 ~ 13.5	135	0.90
OD280-12MB	2,200	950	56	12	9 ~ 13.5	90	0.65
OD280-12LB	1,800	780	48	12	9 ~ 13.5	62	0.55
OD280-24HB	2,550	1,200	72	24	18 ~ 27	135	0.90
OD280-24MB	2,200	950	56	24	18 ~ 27	90	0.65
OD280-24LB	1,800	780	48	24	18 ~ 27	62	0.55
OD280-48HB	2,550	1,200	72	48	24 ~ 55	135	0.90
OD280-48MB	2,200	950	56	48	24 ~ 55	90	0.65
OD280-48LB	1,800	780	48	48	24 ~ 55	62	0.55

Knight Electronics, Inc.
10557 Metric Drive
Dallas, Texas 75243
214-340-0265

RoHS Compliant

Orion Fans
Information and data is subject to change without prior notification.

Long Life
Low Cost

The Challenger series provides a unique patented sealed sleeve bearing system that has a life expectancy in excess of 50,000 hours. It is a very cost effective product for the cost conscious OEM

Size	120 x 38mm (4.7″x1.5″)		120 X 25mm (4.7″x 1.0″)		92 x 25mm (3.6″x1.0″)		80 x 25mm (3.2″ x 1.0″)	
Part Number	OD1238-12HSS	OD1238-24MSS	OD1225-12HSS	OD1225-24HSS	OD9225-12HSS	OD9225-24HSS	OD8025-12HSS	OD8025-24HSS
Nominal Voltage	12VDC	24VDC	12VDC	24VDC	12VDC	24VDC	12VDC	24VDC
Nominal Current	0.50A	0.23A	0.44A	0.24A	0.25A	0.15A	0.25A	0.16A
Rated Power	4.7W	4.8W	5.3W	5.8W	2.9W	3.4W	2.9W	2.4W
Rated Speed (RPM)	2,800	2,540	2,200	2,200	2,900	2,900	3,100	3,100
Airflow (CFM)	105	96	85	85	52	52	40	40
Noise Level (dB)	47	47	39	39	35	35	34	34
Max. Static Pressure	0.27″ H_2O	0.23″ H_2O	0.14″ H_2O	0.14″ H_2O	0.13″ H_2O	0.13″ H_2O	0.16″ H_2O	0.16″ H_2O
Photo								

Size	60 x 25mm (2.4″ x 1.0″)		40 x 20mm (1.6″ x 0.8″)		40 x 10mm (1.6″ x 0.4″)	
Part Number	OD6025-12HSS	OD6025-24HSS	OD4020-12HSS	OD4020-24HSS	OD4010-12HSS	OD4010-24HSS
Nominal Voltage	12VDC	24VDC	12VDC	24VDC	12VDC	24VDC
Nominal Current	0.23A	0.15A	0.11A	0.09A	0.10A	0.09A
Rated Power	2.8W	3.6W	1.2W	1.7W	1.2W	1.4W
Rated Speed (RPM)	4,600	4,600	7,800	7,800	6,000	6,000
Airflow (CFM)	25	25	9.0	9.0	6.7	6.7
Noise Level (dB)	35	35	32	32	25	25
Max. Static Pressure	0.20″ H_2O	0.20″ H_2O	0.30″ H_2O	0.30″ H_2O	0.10″ H_2O	0.10″ H_2O
Photo						

Frame & Impeller	PBT, UL94V-2 plastic
Connection	2x Lead wires
Motor	Brushless DC, auto restart, polarity protected
Bearing System	Sealed Sleeve
Insulation Resistance	10M ohm between lead-wire and frame (500VDC)
Dielectric Strength	1,500VAC / 1 min.
Operating Temperature	-10C ~ +70C

Function

■ Frequency Generator

Generates a square wave out frequency equal to 2 periods per revolution for 4 poles fan and informs the user of the fan's running speed.

● Application 1 - Open Collector

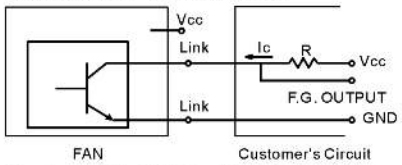

Vcc=From + 5 To +28 VDC Do not exceed fan supply voltage

Ic=5 mA max.

R=V/I (Output "R" value calculation)

● Application 2 - TTL Compatible

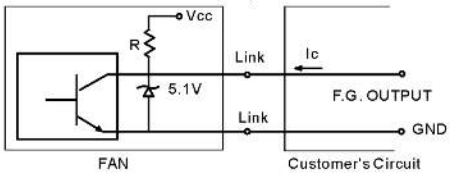

Ic= 5 mA max.

● Output Waveform

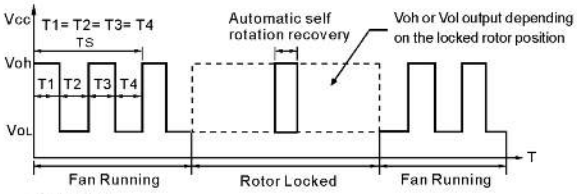

◆ N=R.P.M

◆ Ts=60/N(Sec)

◆ Output Level

Voh= Vcc ±10%

VoL=0~0.6V

Ic=5 mA max.

● Output Waveform

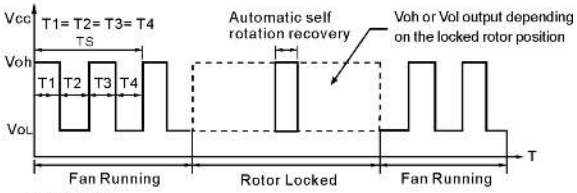

◆ N=R.P.M

◆ Ts=60/N(Sec)

◆ Output Level

Voh= 5.0V±0.5V

VoL=0~0.6V

Ic=5 mA max.

■ **Rotation detector**

Detects whether the fan is running or has stopped by generation a high or low output signal.

● Application 1

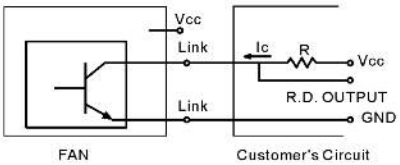

Vcc=From + 5 To +28 VDC (Generally using + 12 or + 24VDC)

Ic=2 mA max.

R=V/I(Output "R" value calculation)

● Application 2

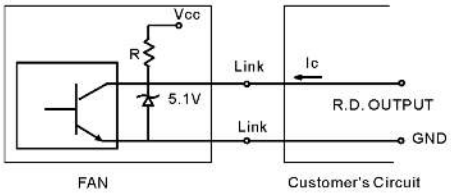

Vcc= From + 5 To +28 VDC (Generally using + 12 or + 24VDC)

Ic= 5 mA max.

R (type) = 10K

● Output Waveform

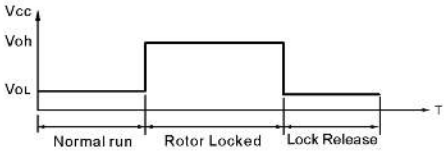

◆ Output Level

Voh=Vcc±10%

VoL=0~0.6V

Icc=5 mA max.

● Output Waveform

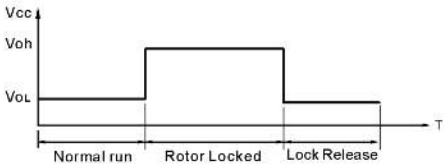

◆ Output Level

Voh=5.0V±0.5V

VoL=0~0.6V

Icc=5 mA max.

■ Temperature Control

Controls the fan speed via an thermistor which changes with the temperature of the task area where the thermistor is located.

● Application

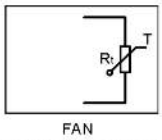

● **RPM Temperature curve**

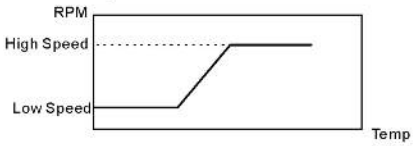

■ Pulse width modulation

Controls the fan speed automatically via an external input Pulse Width Modulation signal.

● Application

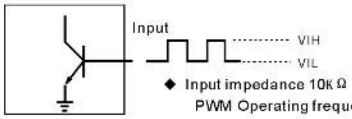

◆ Input impedance 10KΩ

PWM Operating frequency is 25±5KHz

VIH MIN=3.3VDC

VIL MAX=0.4VDC

● RPM & Duty Cycle Curve

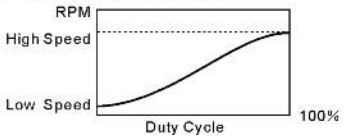

OA600ST Series
432x338x44.5mm
(17”x 13.3”x 1.75”)
115V, 230V

OA300ST Series
432x203x44.5mm
(17”x 8”x 1.75”)
115V, 230V

BACK

BACK

Lighted rocker switch

Resettable circuit breaker

Unit slides in to any standard 19” rack

Tray features 3 or 6 high performance sealed ball bearing fans

Black wrinkle finish

Operating temperature -40 to + 75 degrees C

Part Number	OA600ST-120	OA600ST-230	OA300ST-120	OA300ST-230
No. of Fans	6	6	3	3
Bearing System	Dual Ball Bearing	Dual Ball Bearing	Dual Ball Bearing	Dual Ball Bearing
Nominal Voltage (60Hz)	115 VAC	230 VAC	115 VAC	230 VAC
Input Power	90 Watts	90 Watts	45 Watts	45 Watts
Rated Speed (RPM)	3,000	3,000	3,000	3,000
Airflow (CFM)	620	620	310	310
Noise Level (dB)	56	56	53	53
Life Expectancy	60,000 hrs (25C)	60,000 hrs (25C)	60,000 hrs (25C)	60,000 hrs (25C)
Connection	2M Modular Power Cord	2M Modular Power Cord	2M Modular Power Cord	2M Modular Power Cord

OMB5200 Series

AC Fan Tray - 115V & 230V
432 x 348 x 132.6mm (17″x 13.7″x 5.22″)

Unit slides in to any standard 19″ rack.

Tray features 2 high performance sealed ball bearing fans.

Power cord configured for standard 115 VAC or 230 VAC connection.

Part Number	OMB5200-120	OMB5200-230
No. of Fans	2	2
Bearing System	Dual Ball Bearing	Dual Ball Bearing
Nominal Voltage (60Hz)	115 VAC	230 VAC
Input Power	70 Watts	70 Watts
Rated Speed (RPM)	3,500	3,500
Airflow (CFM)	340	340
Noise Level (dB)	57	57
Life Expectancy	60,000 hrs (25C)	60,000 hrs (25C)
Connection	1.8M Power Cord	1.8M Power Cord

OA406 Fan Tray

Universal Input 90 - 264VAC

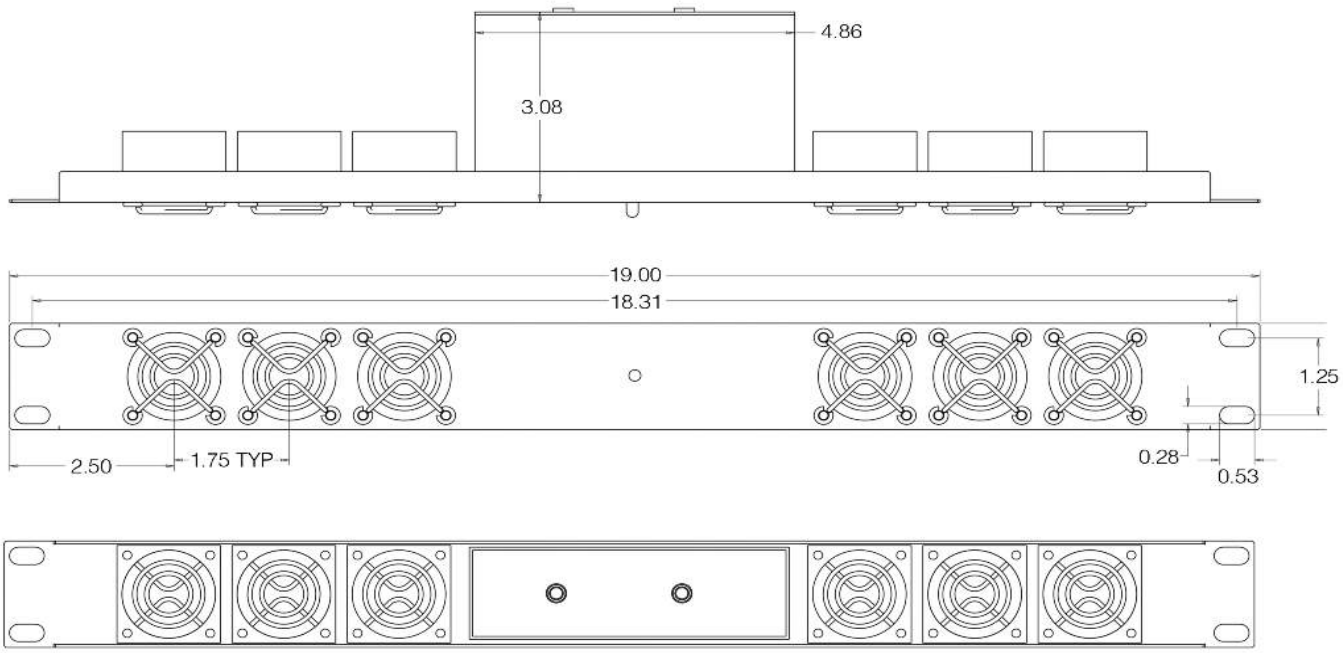

Description	• Universal 90-264VAC Input external power supply • 1U high, panel mount configuration • Either N. American NEMA 5-15P or IEC320-C14 connection • High Airflow 160CFM • Bi-color LED alarm indicator lamp • Optional redundant 2nd power supply available • Redundant power switching is seamless and automatic • Redundant power input may be from customers 12VDC supply • Sturdy 16 Ga Powder Coated Steel Construction
Part Numbers	OA406: Power Input NEMA 5-15 plug OA406-IEC: C14 power supply plug OA406-DUAL: With redundant power supply OA406-IEC-DUAL: With redundant power supply, international version OA406-PS: Add-on power supply. Converts OA406 to DUAL OA406-IEC-PS: Add-on power supply. International version

Knight Electronics, Inc.
10557 Metric Drive
Dallas, Texas 75243
214-340-0265

RoHS Compliant

Orion Fans

Information and data is subject to change without prior notification.

OA300ST Short Tray

Environment Responsive Smart Fan Tray
432 x 203 x 44.5mm

The OA300ST Smart fan tray saves energy coosts by sensing its environment and adjusting its performance

Modular power cord, resettable circuit breaker and lighted rocker

Speed: 1,600 ~ 2,500 RPM
Air Flow: 190 ~ 300

Slides easily into any standard 19" rack

115V, 230V AC Available

60,000 hour life expectancy

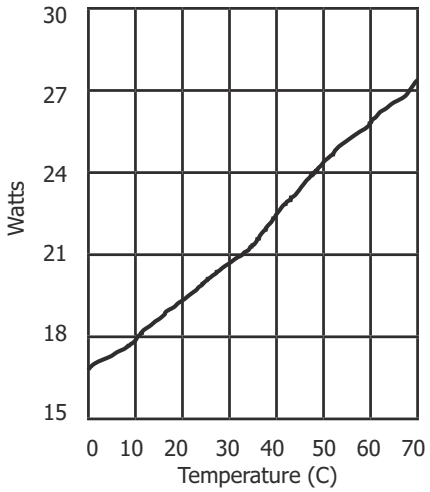

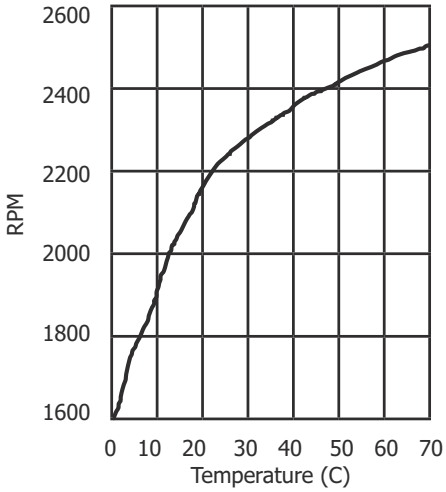

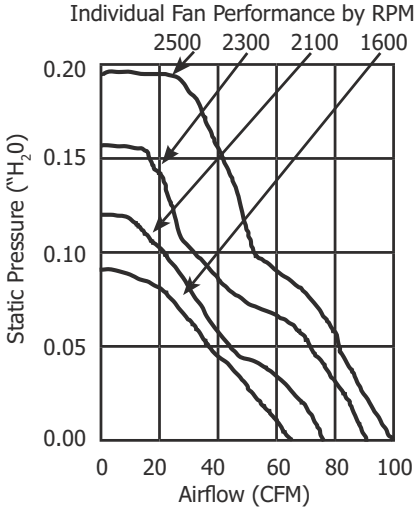

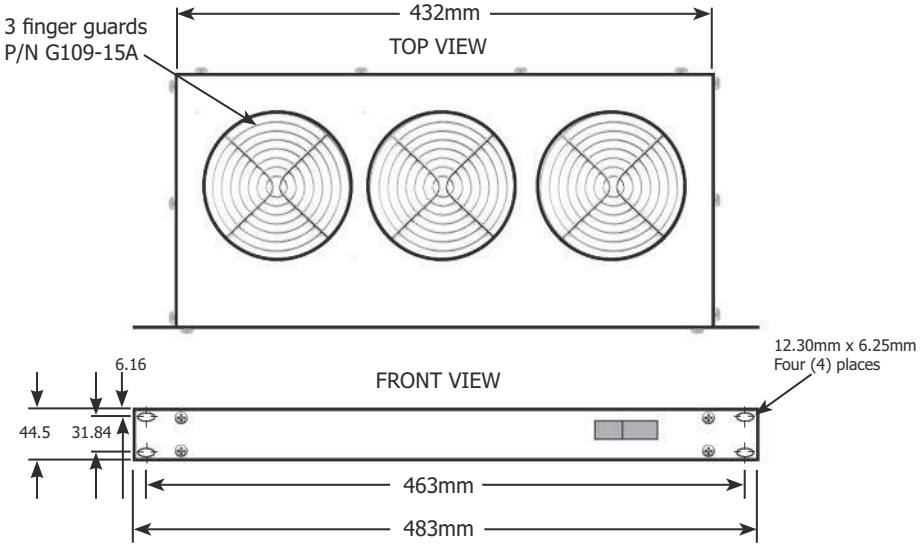

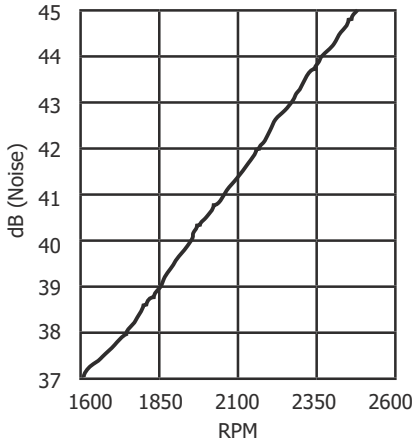

Low noise
Low power consumption
Ultra low speed operation

OPTIONS
Automatic thermal control, hub mounted or lead mounted
Manual speed control

Part Number	Description
OA300ST-12003	120VAC, hub-mounted thermistor
OA300ST-12004	120VAC, remote, detachable thermistor
OA300ST-23003	230VAC, hub-mounted thermistor
OA300ST-23004	230VAC, remote, detachable thermistor

Knight Electronics, Inc.
10557 Metric Drive
Dallas, Texas 75243
214-340-0265

RoHS Compliant

Orion Fans
Information and data is subject to change without prior notification.

ThermalCare Fan Trays

AC and DC Fan Trays
UL and cUL Listed

Model Number	Part Number	Voltage	Fans	CFM
AC FAN TRAYS				
OA300S	FTA-03115-014(BK)	115VAC	3	330
OA600S	FTA-06115-014(BK)		6	660
OA300	FTA-03115-018(BK)		3	330
OA300-A	expansion module		3	330
OA600	FTA-06115-018(BK)		6	660
OA900	FTA-09115-018(BK)		9	990
OA302S	FTA-03220-014(BK)	230VAC	3	330
OA602S	FTA-06220-014(BK)		6	660
OA302	FTA-03220-018(BK)		3	330
OA302-A	expansion module		3	330
OA602	FTA-06220-018(BK)		6	660
OA902	FTA-09220-018(BK)		9	990
DUAL VOLTAGE AC TRAYS				
OA300S-DV	FTA-03DV-014(BK)	115/230VAC	3	330
OA600S-DV	FTA-06DV-014(BK)		6	660
OA300-DV	FTA-03DV-018(BK)		3	330
OA300DV-A	expansion module		3	330
OA600-DV	FTA-06DV-018(BK)		6	660
OA900-DV	FTA-09DV-018(BK)		9	990
DC FAN TRAYS				
OD300S-12	FTD-03012-014(BK)	12VDC	3	330
OD600S-12	FTD-06012-014(BK)		6	660
OD300-12	FTD-03012-018(BK)		3	330
OD300-12-A	expansion module		3	330
OD600-12	FTD-06012-018(BK)		6	660
OD900-12	FTD-09012-018(BK)		9	990
OD300S-24	FTD-03024-014(BK)	24VDC	3	330
OD600S-24	FTD-06024-014(BK)		6	660
OD300-24	FTD-03024-018(BK)		3	330
OD300-24-A	expansion module		3	330
OD600-24	FTD-06024-018(BK)		6	660
OD900-24	FTD-09024-018(BK)		9	990
OD300S-48	FTD-03048-014(BK)	48VDC	3	330
OD300-48-A	expansion module		3	330
OD600S-48	FTD-06048-014(BK)		6	660
OD300-48	FTD-03048-018(BK)		3	330
OD600-48	FTD-06048-018(BK)		6	660
OD900-48	FTD-09048-018(BK)		9	990

Fan trays are UL listed by the part number only. Model numbers are assigned as configuration descriptors only and do not affect UL certifications.

basic fan tray specifications...

Frame
Heavy Duty steel construction with extruded aluminum side rails. Black color standard, gray available by special order.

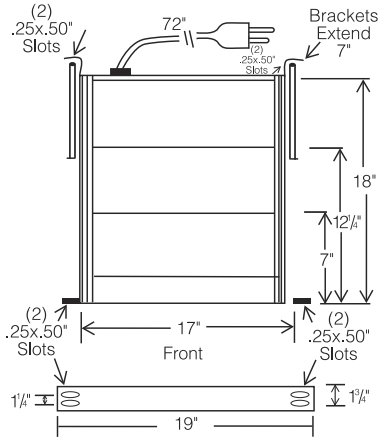

Hardware
EZ-mount clip nuts and fasteners

Configuration
Standard trays have 3, 6 or 9 fans installed. Our ADD-a-MODULE feature allows the user to easily increase or decrease the amount of cooling in 3-fan increments.

Options
Ultrashort 3-fan Tray available. Lighted on/off rocker switch. Dual voltage selector switch. Fan monitor and alarm. MEDIUM AND LOW SPEED FANS CAN BE SUBSTITUTED FOR LOW-NOISE APPLICATIONS. Ultra high speed fans are available.

We use only top quality, ball bearing ORION FANS in our fan tray assemblies. For DC applications plastic fans are standard however diecast aluminum fans can be substituted on request. (Minimums apply.)

We can customize our fan trays to perform virtually any function required. If you need something which does not appear in this catalog just let us know. Our sales engineers will be happy to discuss your needs and provide a solution.

MAXIMUM FLEXIBILITY

Add-A-Module for additional cooling quickly and simply

115VAC

230VAC

DC Power

ORION STANDARD TRAY L=19” W=19” D=1.75” with IEC320, C14-type connector on back. 115/230 voltage selector included with dual voltage tray.

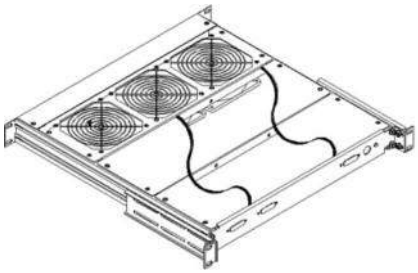

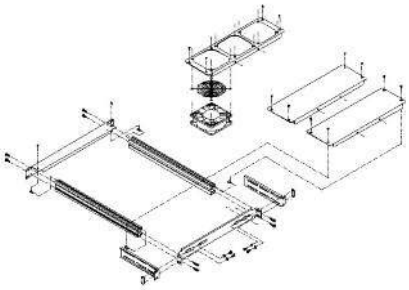

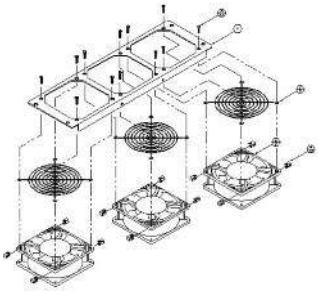

Standard trays are populated with high speed, ball bearing fans. We can substitute virtually any 120mm AC or DC fan for your special project. Just let your sales engineer know what your requirements are and he or she will be happy to provide a solution.

ORION SHORT TRAY L=14” W=19” D=1.75”. Optional lighted on/off rocker with IEC320, C14-type connector on back. 115/230 voltage selector included with dual voltage tray.

Custom Trays

ORION FANS fan trays are available in dozens of stock configurations. If you cannot find what you are looking for give us a call. We can design and build your trays from scratch or we can help you come up with solutions for your toughest problems.

Dual Voltage Selector

Lighted on/off rocker

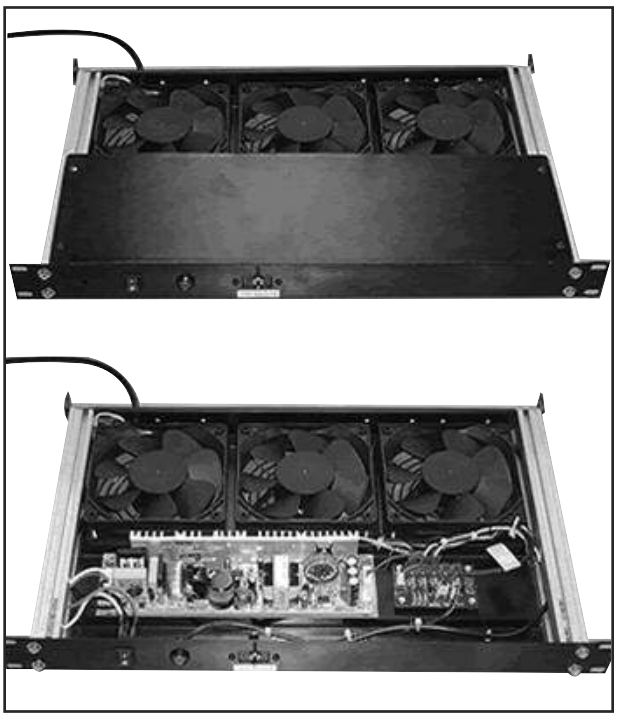

EXPANSION MODULE Maximum flexibility - minimum effort. Add or subtract fan modules quickly and easily as your cooling needs change. Overall dimensions16.5”x 5.25”x 1.75”

OAB190 Series

AC Fan - 115V, 230V
Motorized Impeller
190 x 70mm (7.5” x 2.8”)

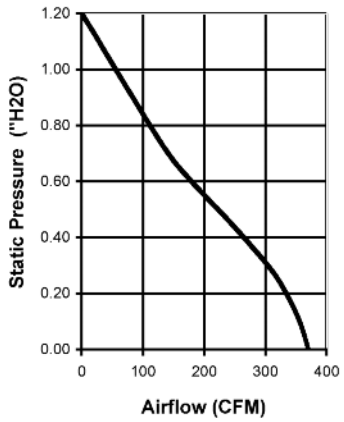

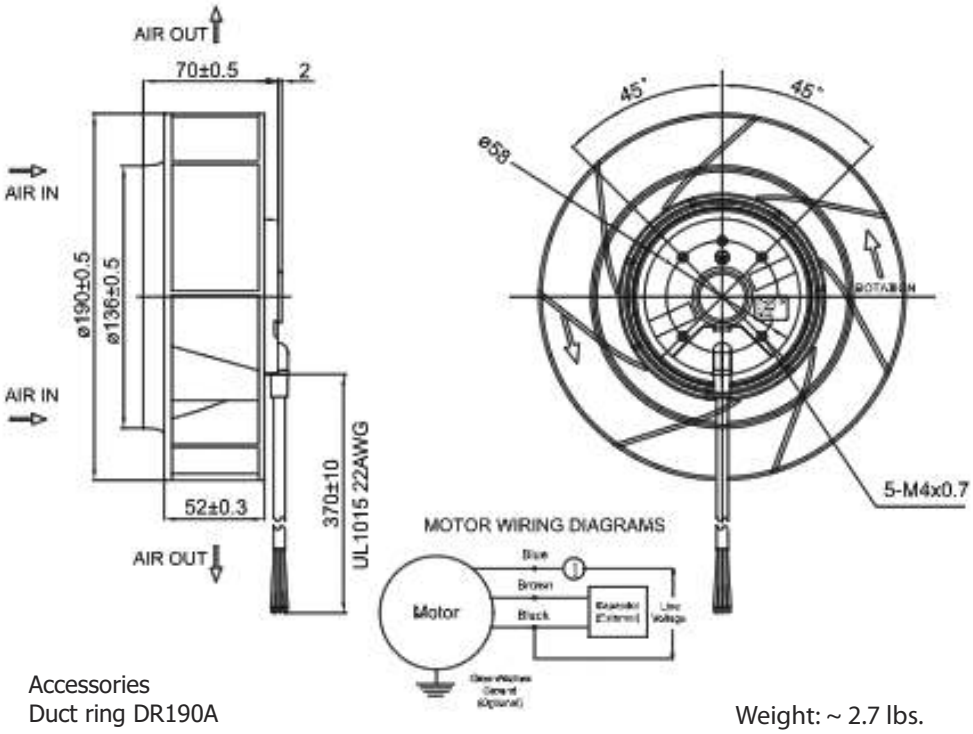

Accessories
Duct ring DR190A

Weight: ~ 2.7 lbs.

Part Number	OAB190-11-1	OAB190-22-1
Nominal Voltage	115 VAC	230 VAC
Voltage Range	100 ~ 125VAC	200 ~ 240VAC
Nominal Current	0.54A	0.30A
Locked Current	0.91A	0.45A
Rated Power	65W	72W
Rated Speed (RPM)	2,700	2,700
Airflow (CFM)	370	370
Noise Level (dB)	63	63
Max. Static Pressure	1.2” H_2O	1.2” H_2O

Frame	Diecast Aluminum m2
Impeller	UL94V-0 Thermoplastic
Connection	2x Lead wires
Motor	AC, Shaded Pole, thermally protected. CAPACITOR INCLUDED
Bearing System	Dual ball bearing
Insulation Resistance	>100M ohm between leadwire and frame (500VDC)
Dielectric Strength	1,500VAC for 1 minute
Temperature Range	-40C ~ +60C
Storage Temp	-40C ~ +80C
Life (L10)	40,000 hrs (L10, 40C)

Knight Electronics, Inc.
10557 Metric Drive
Dallas, Texas 75243
214-340-0265

RoHS Compliant

Orion Fans
Information and data is subject to change without prior notification.

OAB220 Series

AC Fan - 115V, 230V
Motorized Impeller
190 x 70mm (7.5" x 2.8")

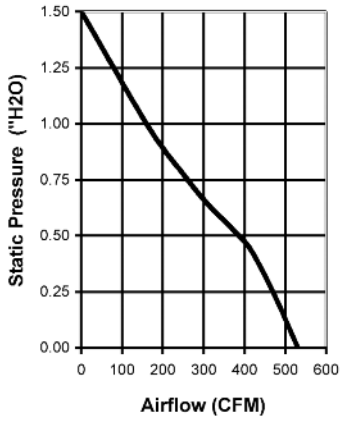

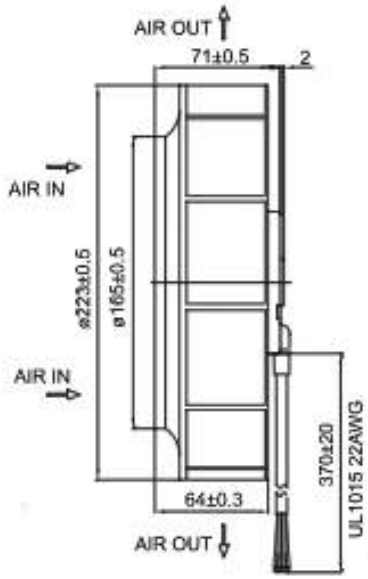

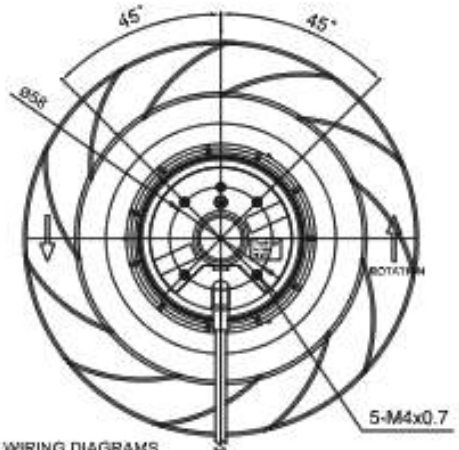

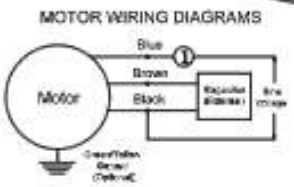

Accessories
Duct ring DR220A

Weight: ~ 3.3 lbs.

Part Number	OAB220-11-1	OAB220-22-1
Nominal Voltage	115VAC	230VAC
Voltage Range	100 ~ 125VAC	200 ~ 240VAC
Nominal Current	0.98A	0.50A
Locked Current	1.22A	0.58A
Rated Power	117W	117W
Rated Speed (RPM)	2,650	2,650
Airflow (CFM)	530	530
Noise Level (dB)	70	70
Max. Static Pressure	1.5" H_2O	1.5" H_2O

Frame	Diecast Aluminum m2
Impeller	UL94V-0 Thermoplastic
Connection	2x Lead wires
Motor	AC, Shaded Pole, themally protected. CAPACITOR INCLUDED
Bearing System	Dual ball bearing
Insulation Resistance	>100M ohm between leadwire and frame (500VDC)
Dielectric Strength	1,500VAC for 1 minute
Temperature Range	-40C ~ +60C
Storage Temp	-40C ~ +80C
Life (L10)	40,000 hrs (L10, 40C)

Knight Electronics, Inc.
10557 Metric Drive
Dallas, Texas 75243
214-340-0265

RoHS Compliant

Orion Fans
Information and data is subject to change without prior notification.

OAB225 Series

AC Blower, ball bearing, 115, 230V
225 x 99mm (8.86" x 3.9")

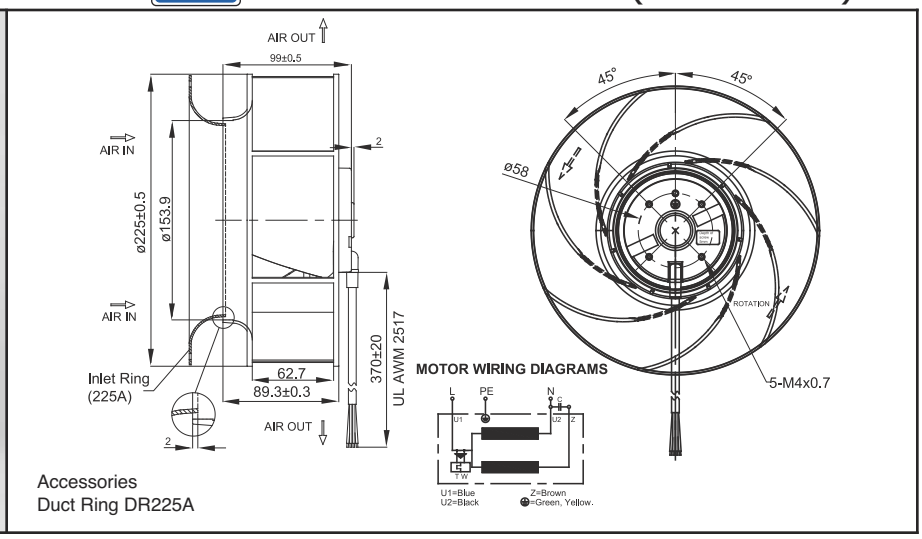

Accessories
Duct Ring DR225A

Backwards Curved Impeller	
Frame & Impeller	Aluminum alloy
Connection	Lead Wires
Motor	AC Capacitor drive 16/250mF (115V) 4/450mF (230V)
Bearing System	Dual Ball

Insulation Housing:
AC1500V / 1 minute

Insulation Resistance:
> 100 M ohms DC500V

Operating Temperature
-40 C ~ +60C

Life Expectancy
40,000 hours (L10, 40C)
Ball bearing

m0

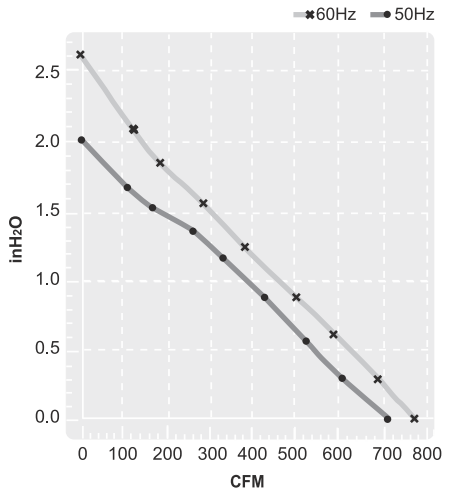

Part Number	OAB22599-11-1B	OAB22599-22-1B
Nominal Voltage	115 VAC (50/60 Hz)	230 VAC (50/60 Hz)
Nominal Current (Amps)	1.16 / 1.41	0.57 / 0.70
Locked Current (Amps)	2.22 / 2.30	1.14 / 1.15
Rated Power	128 / 160 W	126 / 157 W
Rated Speed (RPM)	2,650 / 2,950	2,650 / 2,950
Airflow (CFM)	700 / 770	700 / 770
Noise Level (dB)	69 / 71	69 / 71
Max. Static Pressure	2.0 / 2.6" H_2O	2.0 / 2.6" H_2O

Knight Electronics, Inc.
10557 Metric Drive
Dallas, Texas 75243
214-340-0265

RoHS Compliant

Orion Fans
Information and data is subject to change without prior notification.

OAB250 Series

Motorized Impeller, 115, 230V
251.5 x 98.1mm (9.9” x 3.87”)

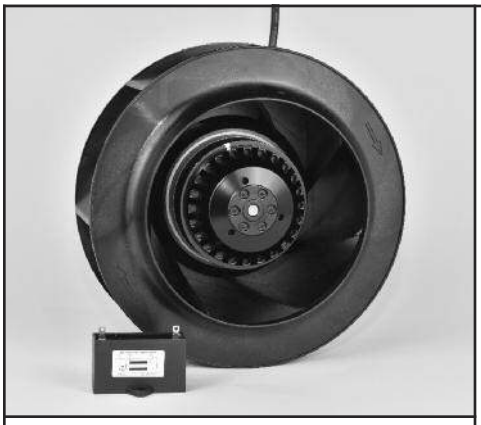

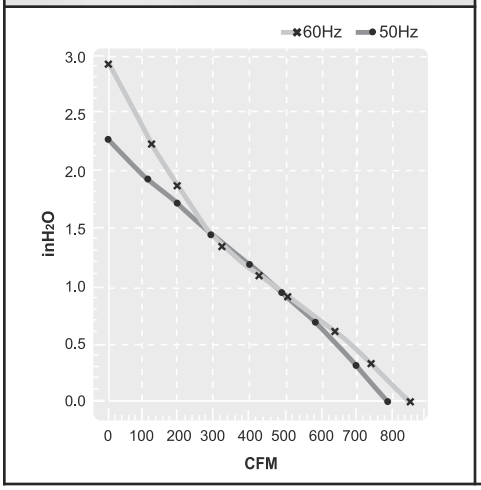

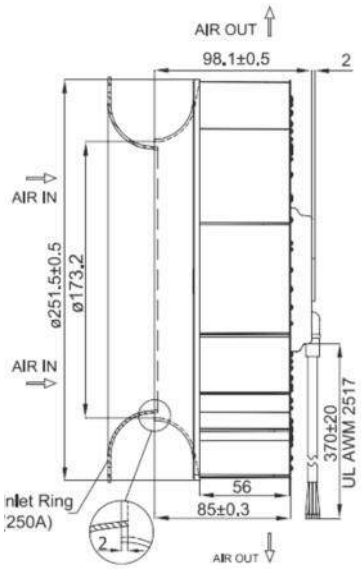

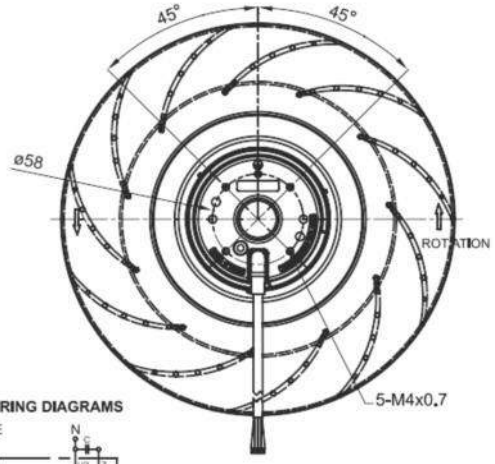

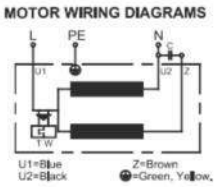

Accessories
Duct ring DR250A

Weight: ~ 3.3 lbs.

Part Number	OAB250-11-1	OAB250-22-1
Nominal Voltage	115VAC	230VAC
Voltage Range	100 ~ 125VAC	200 ~ 240VAC
Nominal Current	2.10A	1.00A
Locked Current	3.00A	1.52A
Rated Power	240W	240W
Rated Speed (RPM)	2,700	2,700
Airflow (CFM)	850	850
Noise Level (dB)	76	76
Max. Static Pressure	2.9” H_2O	2.9” H_2O
Bearing System	Sealed Dual Ball	Sealed Dual Ball

Frame	Diecast Aluminum m2
Impeller	UL94V-0 Thermoplastic
Connection	4x Lead wires
Motor	AC, Capacitor Run, themally protected. CAPACITOR INCLUDED
Bearing System	Dual ball bearing
Insulation Resistance	>100M ohm between leadwire and frame (500VDC)
Dielectric Strength	1,500VAC for 1 minute
Temperature Range	-40C ~ +60C
Storage Temp	-40C ~ +80C
Life (L10)	40,000 hrs (L10, 40C)

Knight Electronics, Inc.
10557 Metric Drive
Dallas, Texas 75243
214-340-0265

RoHS Compliant

Orion Fans
Information and data is subject to change without prior notification.

OAB318 Series

AC Blower - 115V, 230V
318 x 154.5mm (12.5”x 6.1”)

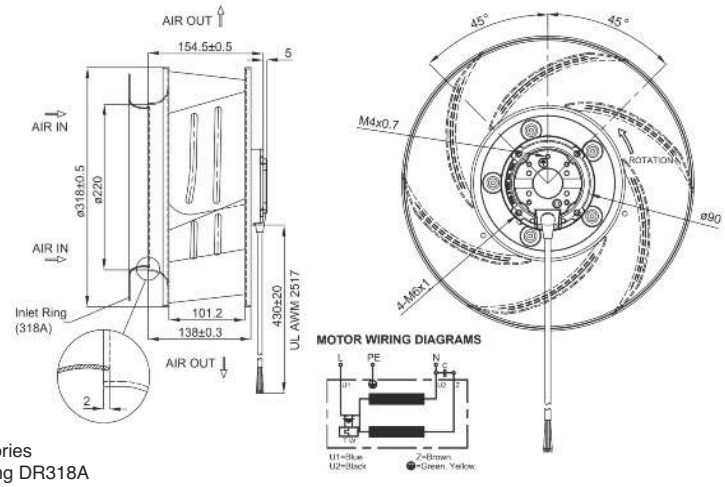

Accessories
Duct Ring DR318A

Frame	Diecast Aluminum
Impeller	Metal alloy
Connection	4x Lead Wires
Motor	AC capacitor drive*, impedance and thermally protected
Bearing System	Ball Bearing
Insulation Resistance	10M ohm between lead wire and frame (500VDC)
Dielectric Strength	1 second at 500VAC, max. leakage < 500 MicroAmp
Temperature Range	-20C ~ +80C (ball)
Life Expectancy	60,000 hours L10 (40C)

Notes:
Date: 030112M2

*CAPACITORS (uF/VDB)
115V - 16/250
230V - 4/450
(Capacitor Included)

Weight: ~ 8.6 lbs.

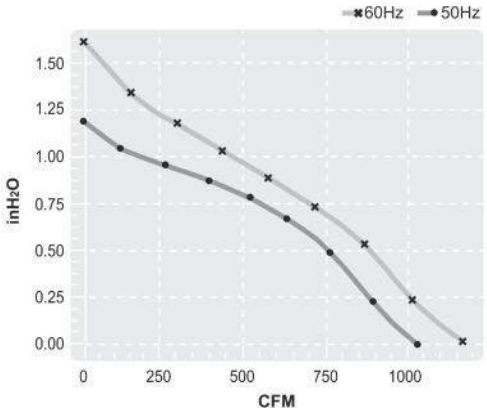

Model Number	OAB318-11-1B	OAB318-22-1B
Nominal Voltage	115VAC	230VAC
Voltage Range	108 ~ 125VAC	210 ~ 240VAC
Nominal Current (Amps)	1.10 / 1.40 [50/60Hz]	0.60 / 0.68 [50/60Hz]
Locked Current (Amps)	2.60 / 2.40 [50/60Hz]	1.43 / 1.31 [50/60Hz]
Input Power (Watts)	115 / 155	115 / 155
Rated Speed (RPM)	1390 / 1580	1390 / 1580
Airflow (CFM)	1015 / 1165	1015 / 1165
Max. Static Pressure	1.2 / 1.6” H_2O	1.2 / 1.6” H_2O
Noise Level (dB)	63 / 66	63 / 66

Knight Electronics, Inc.
10557 Metric Drive
Dallas, Texas 75243
214-340-0265

RoHS Compliant

Orion Fans
Information and data is subject to change without prior notification.

OAB360 Series

Motorized Impeller, 115, 230V
360 x 167mm (14.2" x 6.57")

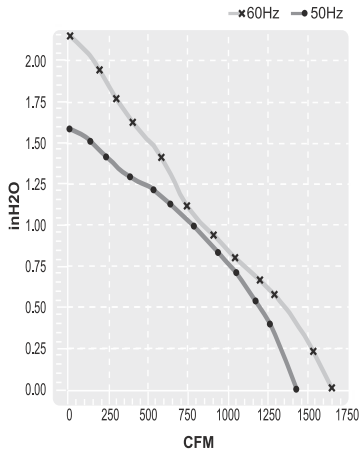

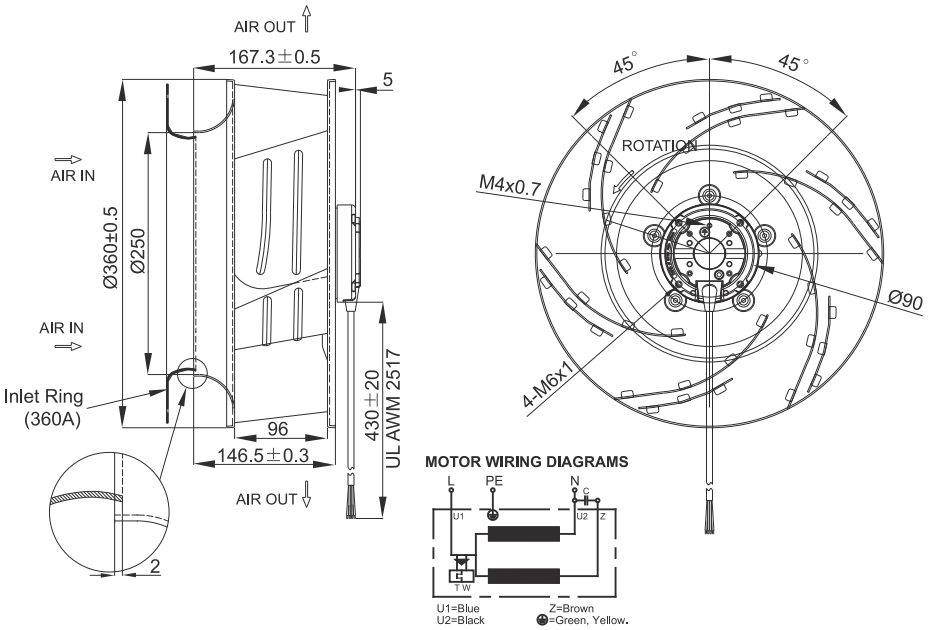

Accessories
Duct ring DR360A

Weight: ~ 3.3 lbs.

Part Number	OAB360-11-1	OAB360-22-1
Nominal Voltage	115VAC	230VAC
Voltage Range	100 ~ 125VAC	200 ~ 240VAC
Nominal Current	2.30A	1.20A
Locked Current	4.00A	2.00A
Rated Power	270W	265W
Rated Speed (RPM)	1,600	1,600
Airflow (CFM)	1645	1645
Noise Level (dB)	70	70
Max. Static Pressure	2.2" H_2O	2.2" H_2O
Bearing System	Sealed Dual Ball	Sealed Dual Ball

Frame	Diecast Aluminum m2
Impeller	Metal
Connection	4x Lead wires
Motor	AC, Capacitor Run, themally protected. CAPACITOR INCLUDED
Bearing System	Dual ball bearing
Insulation Resistance	>100M ohm between leadwire and frame (500VDC) Class B
Dielectric Strength	1,500VAC for 1 minute
Temperature Range	-40C ~ +60C
Storage Temp	-40C ~ +60C
Life (L10)	40,000 hrs (L10, 40C)

Knight Electronics, Inc.
10557 Metric Drive
Dallas, Texas 75243
214-340-0265

RoHS Compliant

Orion Fans
Information and data is subject to change without prior notification.

OAB400 Series

Centrifugal Fan - Class B
404 x 162mm (15.9" x 6.4")

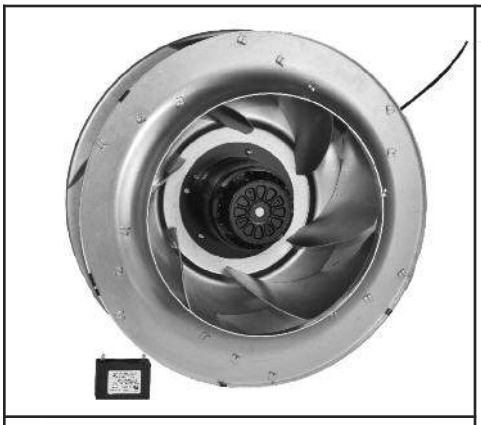

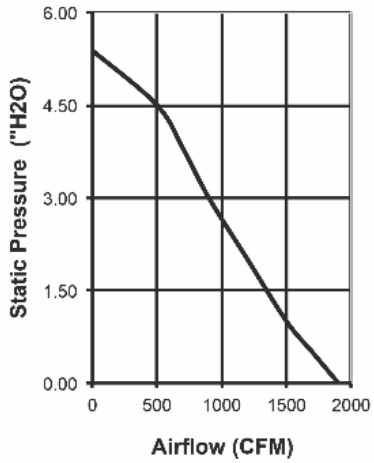

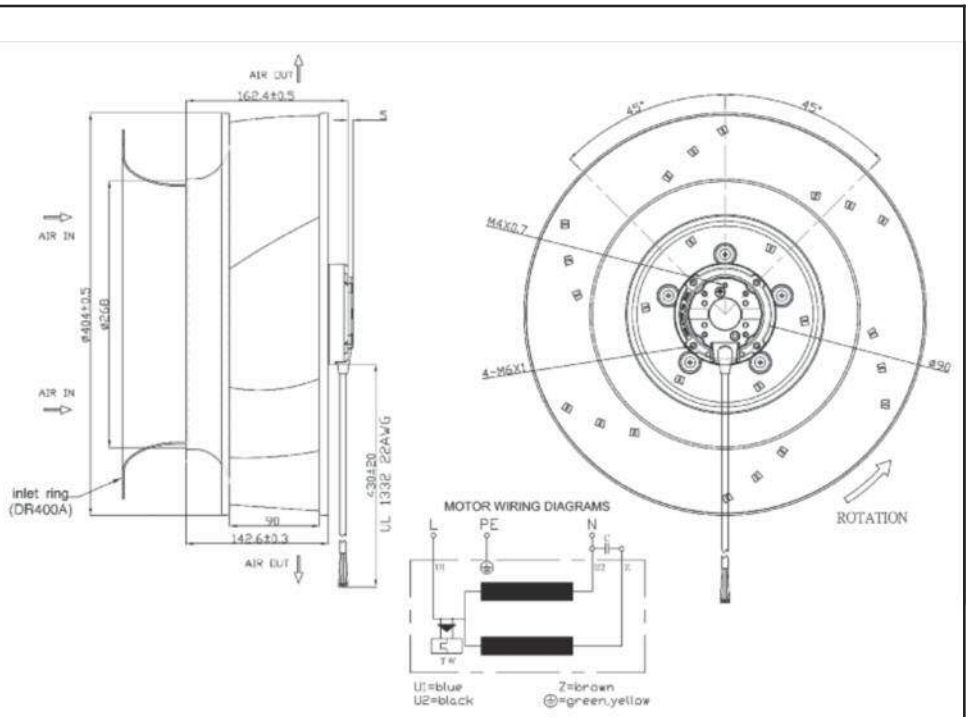

Accessories
Duct ring DR400A (optional)

Weight: 12 lbs.

Model Number	OAB400-22-1
Part Number	241611002
Nominal Voltage	230 VAC (50 Hz)
Nominal Current	1.26 A (1.7 A locked) (50 Hz)
Rated Power	287 W
Rated Speed (RPM)	1250
Airflow (CFM)	1,900
Noise Level (dB)	73
Max. Static Pressure	5.4" H_2O
Bearing System	Sealed Dual Ball

Frame	Diecast Aluminum m2
Impeller	Metal
Connection	4x Leads UL1332, 22AWG
Motor	Capacitor run induction and external rotor design Thermal protection. Capacitor included (8uF/450V)
Bearing System	Dual ball bearing
Insulation Resistance	>100M ohm between leadwire and frame (500VDC) Class B
Dielectric Strength	1,500VAC for 1 minute
Temperature Range	-40C ~ +60C
Life (L10)	40,000 hrs (L10, 40C)

Knight Electronics, Inc.
10557 Metric Drive
Dallas, Texas 75243
214-340-0265

RoHS Compliant

Orion Fans
Information and data is subject to change without prior notification.

OAB908 Side Inlet Blower

AC Blower, ball bearing, Dual Speed
183 x 190 x 70mm (7.2″ x 7.5″ x 2.8″)
115V, 230V

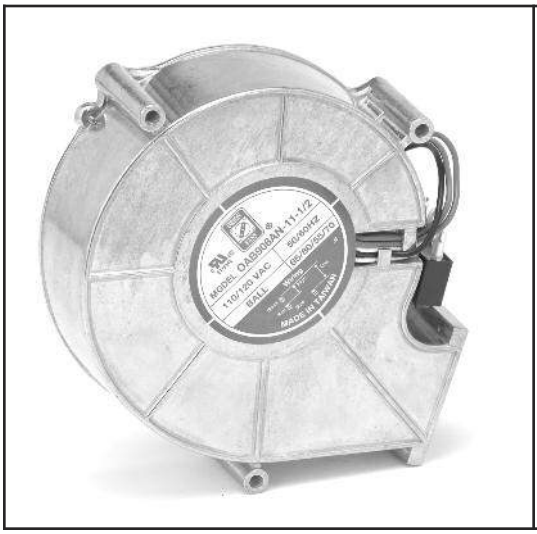

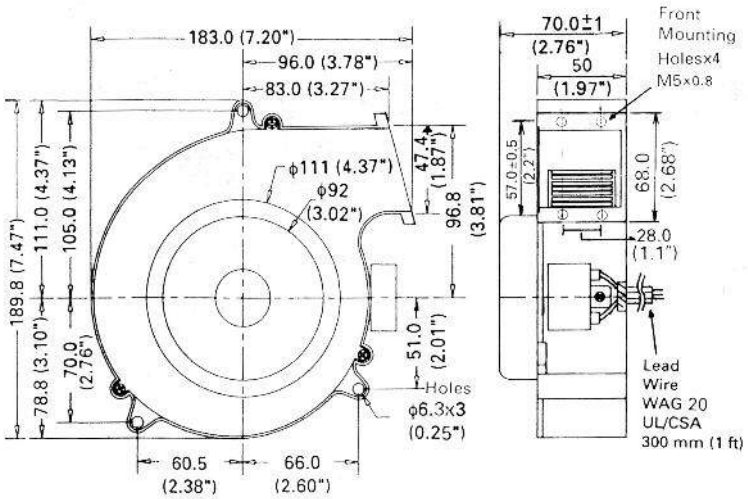

Dual Speed Blower (High, Medium)	
Frame & Impeller	Aluminum die-cast shell with UL94V-0 impeller
Connection	Lead Wires
Motor	Single phase, capacitor induction, 2/4 pole, inner rotor, thermal protection
Bearing System	Dual ball - sealed

Operating Temp: Ambient non-condensing allowable thermal range -20C~+75C
Storage Temp -30C ~ +80C
-L10 Life: MTBF life test 80,000 hours at +45C, 40,000 hours at +60C

-Dielectric Strength: Over 1 min. at 1,500 VAC, 0.5mA, 50/60 Hz

-Insulation Resistance: Over 100 Mega Ohm at DC 500V

Single speed version available

m0

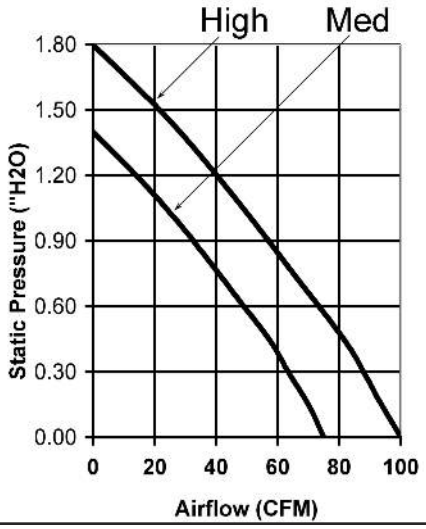

Model Number	OAB908AN-11-1/2	OAB908AN-22-1/2
Part Number	264311060	264611060
Nominal Voltage	115 VAC	230 VAC
Voltage Range	100 ~ 125 VAC	200 ~ 240 VAC
Rated Power	80 W / 65 W	80 W / 65 W
Rated Speed (RPM)	3,100 / 2,400	3,100 / 2,400
Airflow (CFM)	100 / 75	100 / 75
Noise Level (dB)	68 / 55	68 / 55
Max. Static Pressure	1.8” H_2O / 1.4” H_2O	1.8” H_2O / 1.4” H_2O

Knight Electronics, Inc.
10557 Metric Drive
Dallas, Texas 75243
214-340-0265

RoHS Compliant

Orion Fans
Information and data is subject to change without prior notification.

OAB800AN Series

AC Blower, ball bearing, 115V, 230V
125 x 126 x 39mm (4.9" x 5"x 1.5")

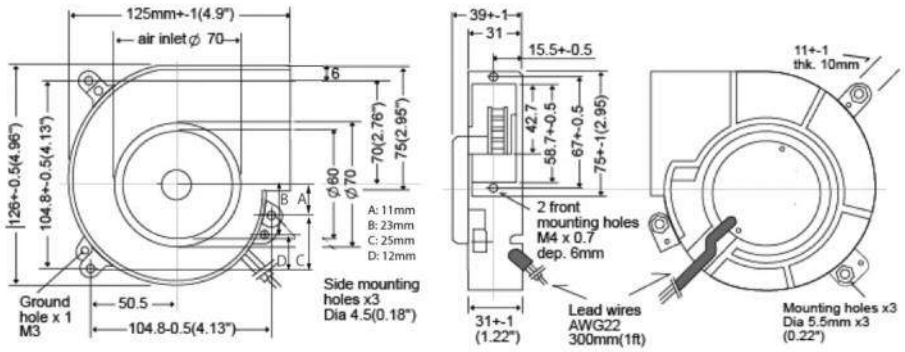

Side Inlet Blower	
Frame & Impeller	Aluminum die-cast shell with UL94V-0 impeller
Connection	Lead Wires
Motor	Shaded pole, inner rotor, single phase, impedance protected
Bearing System	Dual ball - sealed

Operating Temp: Ambient non-condensing allowable thermal range -20C~+75C
Storage Temp
-30C ~ +80C

-L10 Life: MTBF life test 85,000 hours at +45C, 40,000 hours at +60C

-Dielectric Strength: Over 1 min. at 1,500 VAC, 0.5mA, 50/60 Hz

-Insulation Resistance: Over 100 Mega Ohm at DC 500V

m0

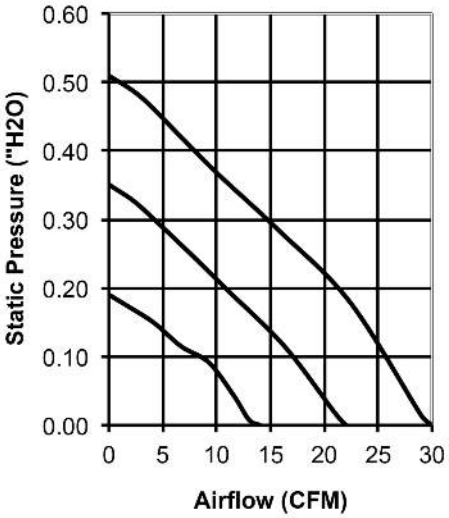

Model Number	Speed (RPM)	Airflow (CFM)	Noise (dB)	Volts AC	Input Power (Watts)	Voltage Range	Max. Static Pressure ("H_2O)
OAB800AN-11-1B	2,800	30	48	115	18	100~120	0.51
OAB800AN-11-2B	2,100	22	39	115	12	100~120	0.35
OAB800AN-11-3B	1,400	14	28	115	9	100~120	0.19
OAB800AN-22-1B	2,800	30	48	230	18	200~240	0.51
OAB800AN-22-2B	2,100	22	39	230	12	200~240	0.35
OAB800AN-22-3B	1,400	14	28	230	9	200~240	0.19

Motor
Brushless DC, locked rotor protected (current limited), auto restart

Insulation Resistance
Min. 10M at 500VDC

Dielectric Strength
1 minute at 500VAC / 1 second, max leakage 500 microamp

Operating Temperature
-10C ~ +70C

Life Expectancy
70,000 hours (40C)

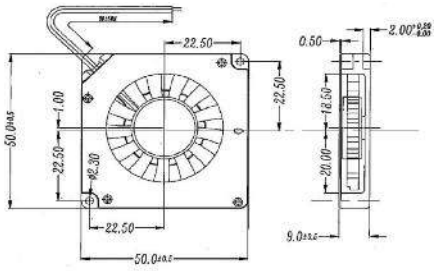

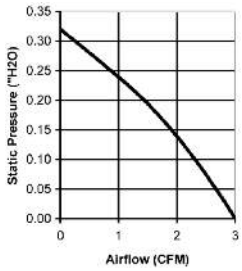

Model Number	Speed (RPM)	Airflow (CFM)	Noise (dB)	Volts DC	Voltage Range	Amps	Max. Static Pressure ("H_2O)
ODB5009-05HB	5,000	3	34	5	4.5~5.5	0.10	0.31
ODB5009-12HB	5,000	3	34	12	10.8~15.2	0.11	0.31

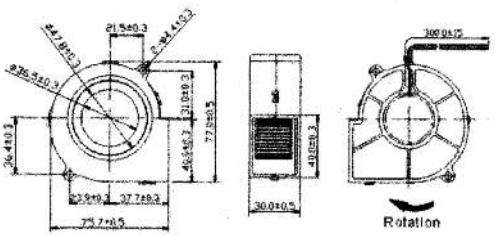

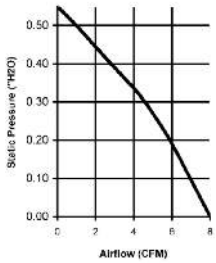

Model Number	Speed (RPM)	Airflow (CFM)	Noise (dB)	Volts DC	Voltage Range	Amps	Max. Static Pressure ("H_2O)
ODB7530-12HB	3,400	13.8	42	12	10.8~13.2	0.24	0.56
ODB7530-24HB	3,400	13.8	42	24	21.6~26.4	0.16	0.56

ODB5115 Series

DC Blower, 12VDC
51 x 15mm (2.” x .59”)

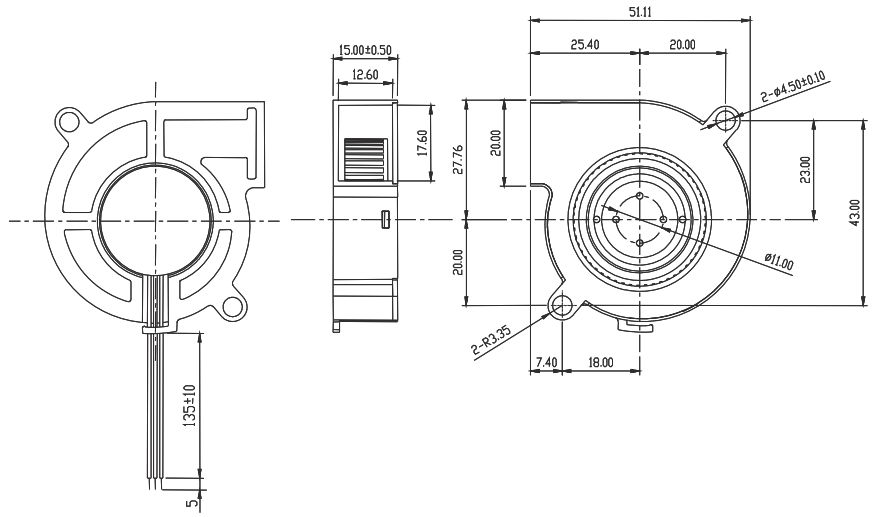

Frame & Impeller	PBT, UL94V-0 plastic
Connection	2x Lead wires *
Motor	Brushless DC, auto restart, polarity protected.
Bearing System	Dual ball bearing
Insulation Resistance	Min. 10M at 500VDC
Dielectric Strength	1 second at 500VAC max leakage 500 microamp
Temperature Range	-10C ~ +70C
Storage Temperature	-40C ~ +80C
Life (L10)	70,000 hours (40C)

Available Options

IP55
Other speeds and voltages
Tachometer

*Connection:
Wire Leads - UL1007
28AWG Red(+), Black(-)

Weight: 27 g

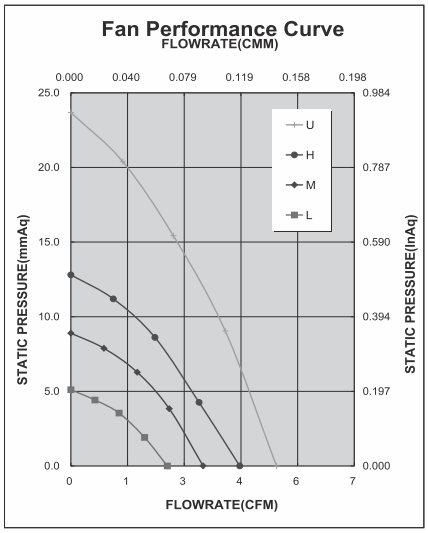

Model Number	Part Number	Speed (RPM)	Airflow (CFM)	Noise (dB)	Volts DC	Voltage Range	Nominal Current	Input Power (Watts)	Max. Static Pressure (“H_2O)
ODB5115-12HB	105141001	5,500	4.2	38	12	7~13.2 VDC	.12 A	1.92	.50
ODB5115-12MB	105131001	4,500	3.3	37	12	7~13.2 VDC	.08 A	1.44	.35
ODB5115-12LB	105121001	3,500	2.4	32	12	7~13.2 VDC	.045 A	.84	.20

Knight Electronics, Inc.
10557 Metric Drive
Dallas, Texas 75243
214-340-0265

RoHS Compliant

Orion Fans
Information and data is subject to change without prior notification.

ODB6015-12HHB02A

DC Blower - 12V
60 x 15mm (2.36" x .59")

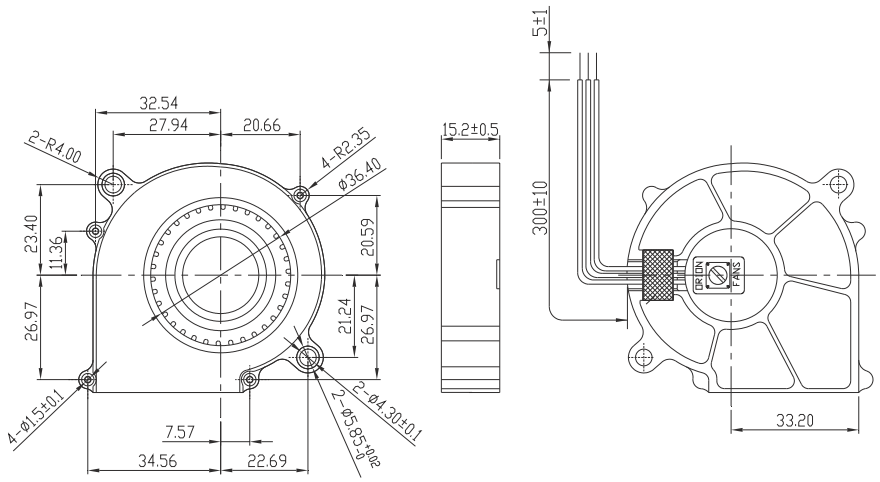

Frame & Impeller	PBT, UL94V-0 plastic
Connection	3x Lead wires *
Motor	Brushless DC, auto restart, polarity protected
Bearing System	Dual ball bearing
Insulation Resistance	Min. 10M at 500VDC
Dielectric Strength	1 minute at 500 VAC, max leakage < 500 MicroAmp
Temperature Range	-10C ~ +70C
Storage Temperature	-40C ~ +80C

Available Options:
Tachometer

*Connection
UL1571, 28AWG, ~320mm
Red (+)
Black (-)
Yellow Alarm

m1

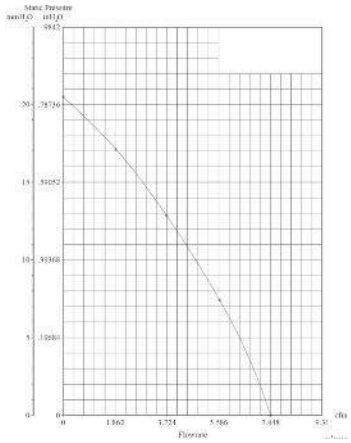

Part Number	ODB6015-12HHB02A
Nominal Voltage	12 VDC
Voltage Range	7 ~ 13.2 VDC
Nominal Current	0.20 A
Start-up Voltage	10.8 VDC
Rated Power	3.84 W
Rated Speed (RPM)	5,000
Airflow (CFM)	7.45
Noise Level (dB)	44
Max. Static Pressure	.80" H_2O

Output of locked signal
*Output type.....Open collector type
*Electrical design suggestion:
(External signal function design is decided by customer)

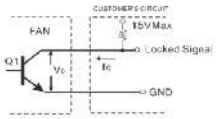

*Transistor Q1 at "ON" position
Collector current.....I_c=5mA Max
Saturation Voltage.....V_{ce}=1.0V Max
(Between Collector and Emitter at I_c=5mA)
*Transistor Q1 at "OFF" position
Release Voltage.....V_{OH}=15V Max

*Output waveform

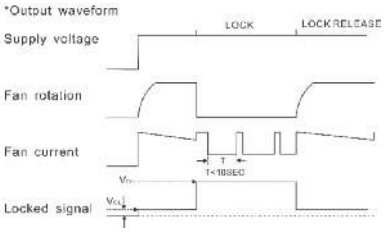

Knight Electronics, Inc.
10557 Metric Drive
Dallas, Texas 75243
214-340-0265

RoHS Compliant

Orion Fans
Information and data is subject to change without prior notification.

ODB9733 Series

DC Blower - Side Inlet
97 x 33mm (3.8” x 1.3”)

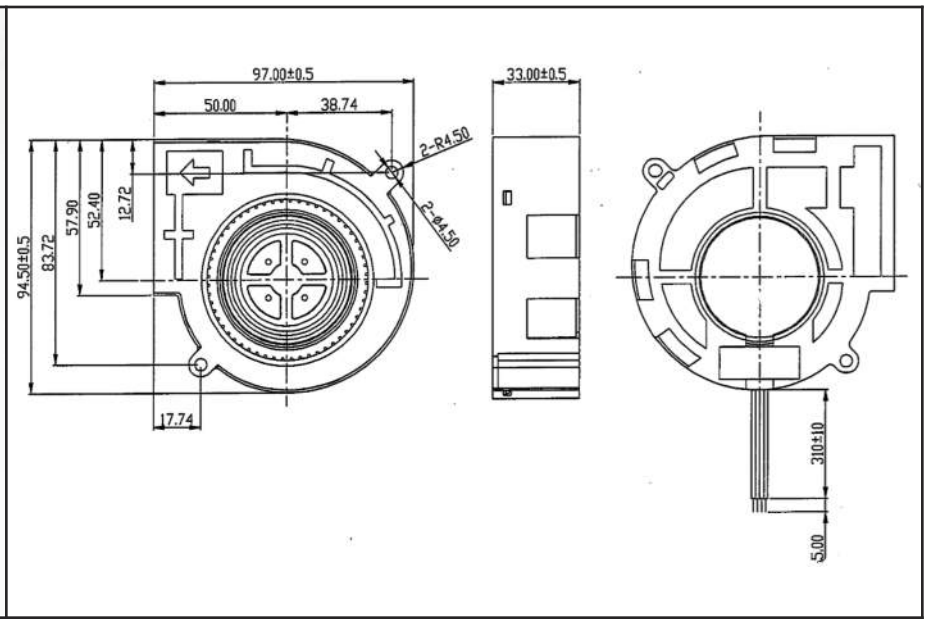

Frame & Impeller	PBT, UL94V-0 plastic
Connection	2x Lead wires
Motor	Brushless DC, auto restart, polarity protected
Bearing System	Dual ball bearing
Insulation Resistance	10M ohm between leadwire and frame (500VDC)
Dielectric Strength	1 minute at 500 VAC, max leakage < 500 MicroAmp
Temperature Range	-20C ~ +75C
Storage Temperature	-40C ~ +80C

Available Options:
Tachometer
Alarm
Thermal Speed Control

*Connection
UL1007 24AWG (~310mm)
Red (+)
Black (-)

Life Expectancy
50,000 hours (L10 at 25C)

m1

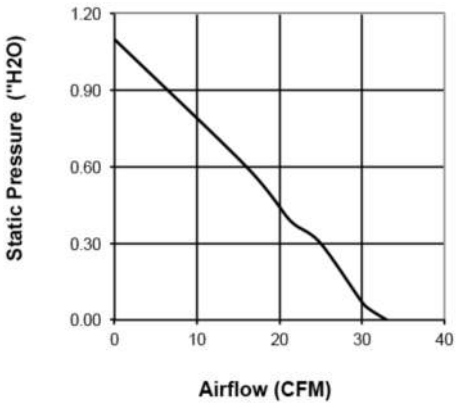

Part Number	ODB9733-12HB	ODB9733-24HB
Nominal Voltage	12 VDC	24 VDC
Voltage Range	10.8 ~ 13.2 VDC	21.6 ~ 26.4 VDC
Nominal Current	0.78 A	0.35 A
Start-up Voltage	10.8 VDC	21.6 VDC
Rated Power	9.36 W	8.4 W
Rated Speed (RPM)	4,000	4,000
Airflow (CFM)	33	33
Noise Level (dB)	56	56
Max. Static Pressure	1.10” H_2O	1.10” H_2O

Knight Electronics, Inc.
10557 Metric Drive
Dallas, Texas 75243
214-340-0265

RoHS Compliant

Orion Fans
Information and data is subject to change without prior notification.

DC Blowers

DC, Side Inlet
12, 24, 48V

ODB600PT

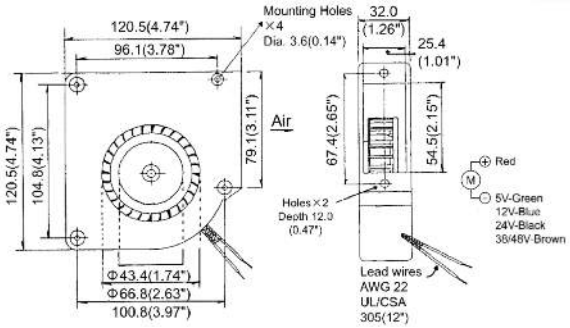

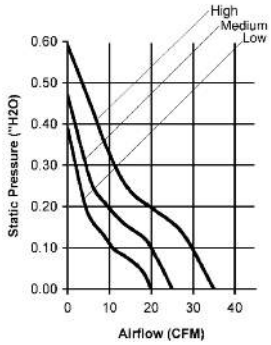

Model Number	Speed (RPM)	Airflow (CFM)	Noise (dB)	Volts DC	Voltage Range	Amps	Max. Static Pressure ("H_2O)
ODB600PT-12HB	3,000	35	49	12	8~14	0.60	0.59
ODB600PT-12MB	2,500	25	42	12	8~14	0.47	0.47
ODB600PT-12LB	1,800	20	30	12	8~14	0.20	0.39
ODB600PT-24HB	3,000	35	49	24	10~29	0.37	0.59
ODB600PT-24MB	2,500	25	42	24	10~29	0.30	0.47
ODB600PT-24LB	1,800	20	30	24	10~29	0.20	0.39

ODB1232

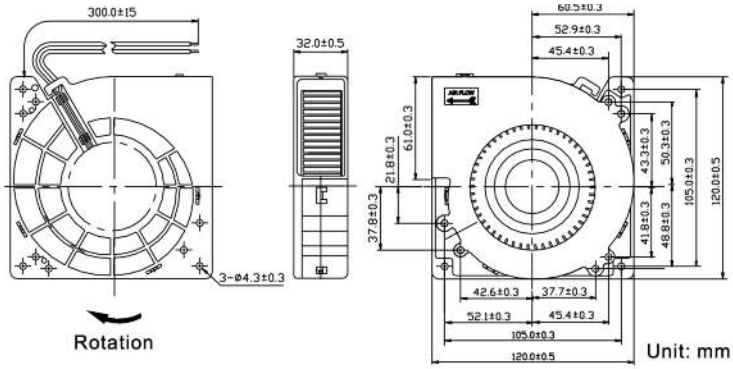

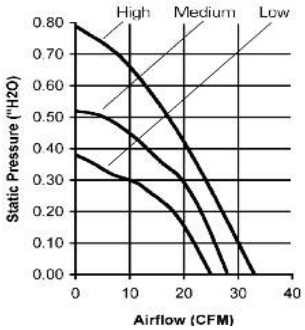

Model Number	Speed (RPM)	Airflow (CFM)	Noise (dB)	Volts DC	Voltage Range	Amps	Max. Static Pressure ("H_2O)
ODB1232-12HB	2,600	33	55	12	6~14	0.79	0.92
ODB1232-12MB	2,300	28	49	12	6~14	0.53	0.83
ODB1232-12LB	2,100	25	48	12	6~14	0.41	0.66
ODB1232-24HB	2,600	33	55	24	12~28	0.43	0.92
ODB1232-24MB	2,300	28	49	24	12~28	0.36	0.83
ODB1232-24LB	2,100	25	48	24	12~28	0.25	0.66
ODB1232-48HB	2,600	33	55	48	24~55	0.22	0.92
ODB1232-48MB	2,300	28	49	48	24~55	0.18	0.83
ODB1232-48LB	2,100	25	48	48	24~55	0.16	0.66

Frame & Impeller
PBT, UL94V-0 Thermoplastic
Power Connection
Two lead wires 300mm (12")
Life Expectancy (L10)
Ball Bearing 50,000 hrs
Sleeve Bearing 30,000 hrs

Motor
Brushless DC, polarity protected, locked rotor protected (current limited), auto restart
Insulation Resistance
Min. 10M at 500VDC
Dielectric Strength
1 minute at 500VAC / 1 second, max leakage 500 microamp

Operating Temperature
Ball Bearing
-20C ~ +80C
Sleeve Bearing
-10C ~ +50C

Knight Electronics, Inc.
10557 Metric Drive
Dallas, Texas 75243
214-340-0265

RoHS Compliant

Orion Fans
Information and data is subject to change without prior notification.

ODB182 Series

DC Blower - Side Inlet
182x171x82mm (7.2”x 6.7”x 3.2”)

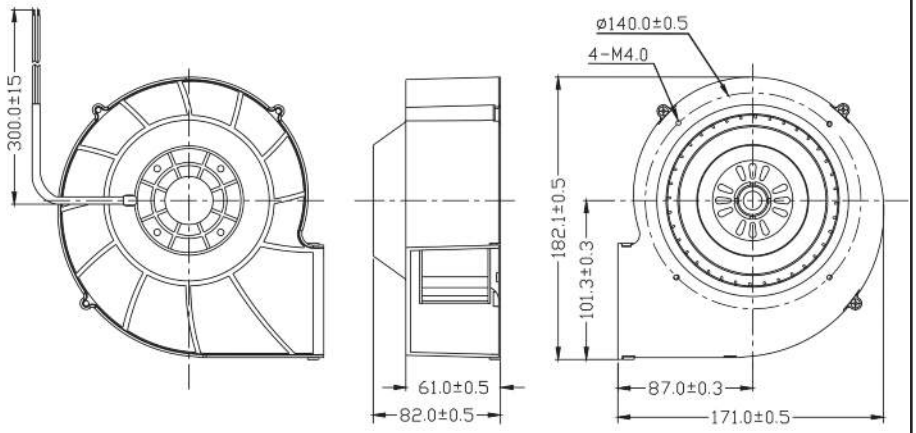

Frame & Impeller	PBT, UL94V-0 plastic
Connection	2x Lead wires *
Motor	Brushless DC, auto restart, polarity protected
Bearing System	Dual ball bearing
Insulation Resistance	10M ohm between leadwire and frame (500VDC)
Dielectric Strength	1 minute at 500 VAC, max leakage < 500 MicroAmp
Temperature Range	-20C ~ +75C
Storage Temperature	-40C ~ +80C

Available Options:
Tachometer
Alarm
Thermal Speed Control

*Connection
UL1007 24AWG (~310mm)
Red (+)
Black (-)

Life Expectancy
50,000 hours (L10 at 25C)

m4

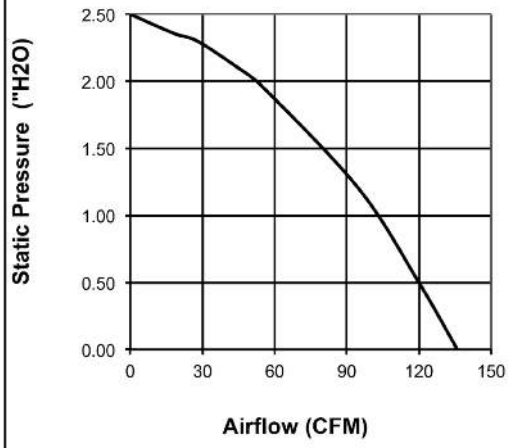

Part Number	ODB182-24HB	ODB182-48HB
Nominal Voltage	24V DC	48V DC
Voltage Range	12 ~ 27V DC	24 ~ 55V DC
Nominal Current	2.2 A	1.1 A
Start-up Voltage	12V DC	24V DC
Rated Speed (RPM)	2,000	2,000
Airflow (CFM)	136	136
Noise Level (dB)	63	63
Max. Static Pressure	2.5” H_2O	2.5” H_2O

Knight Electronics, Inc.
10557 Metric Drive
Dallas, Texas 75243
214-340-0265

RoHS Compliant

Orion Fans
Information and data is subject to change without prior notification.

Dimensions: mm (inch)

Wiring Example

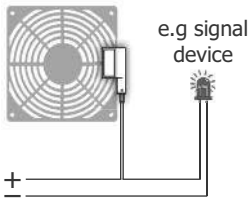

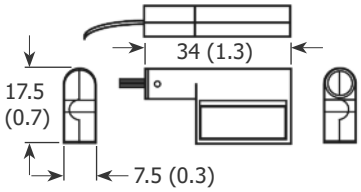

Air-flow monitor integrated in a protective grill

92 x 92 / 120 x 120
(3.62 x 3.62 / 4.72 x 4.72)

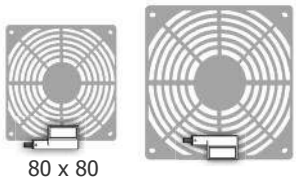

80 x 80
(3.15 x 3.15)

The air-flow monitor provides a simple alternative to indicate positive or negative air flow of fans or blowers. When properly installed and connected in series with an optical (i.e. LED) or audible signaling device, a bi-directional switch will activate an electrical contact if the air flow of the fan falls below 8.2 ft/s, turning the signaling device on or off. The AFM monitor can also be attached to an existing grill or guard.

Specifications

Contact Type: Reed/magnet contact
NC (Normally Closed): Contact open with air flow
NO (Normally Open): Contact closed with air flow
Switching Threshold of Air Flow Speed: >8.2 ft/s (2.5 m/s)
Hysteresis: 3.3 ft/s (1m/s) - fixed
Contact Resistance Incl. Wire: 370m (1214”)
Service Life: >100,000 cycles
Maximum Switching Capacity: 10W (resistive load)
Maximum Switching Voltage: NC - AC/DC 240V
NO - DC 60V
Maximum Switching Current: NC - DC 500mA
NO - DC 170mA

Connection: 2 x single strand AWG26, length 500mm (20”), tip of stranded wire stripped/tinned 5mm (0/20”)
Mounting: Attachment clamp and/or clip, or integrated in protective grill
Mounting Position: Air-flow monitor opening perpendicular to air flow
Operating Temperature: -20 to 50°C (-4 to 122°F)
Storage Temperature: -20 to 80°C (-4 to 176°F)
Housing: Plastic, UL 94HB, black
Dimensions: 34 x 17.5 x 7.5mm (1.3 x 0.7 x 0.3”)
Protection Type: NEMA 1 (IP 20)
Agency Approvals: CE
RoHS Compliant

Model Number	Description	Weight
AFM-01NC	Air-flow switch, NC with mounting clip and clamp (for attaching to existing fan assembly)	6 g (0.2 oz)
AFM-01NO	Air-flow monitor, NO with mounting clip and clamp (for attaching to existing fan assembly)	6 g (0.2 oz)
AFM-80NC	Air-flow monitor, NC with 80 x 80mm (3.15”) plastic finger guard	20 g (0.7 oz)
AFM-80NO	Air-flow monitor, NO with 80 x 80mm (3.15”) plastic finger guard	20 g (0.7 oz)
AFM-92NC	Air-flow monitor, NC with 92 x 92mm (3.62”) plastic finger guard	20 g (0.7 oz)
AFM-92NO	Air-flow monitor, NO with 92 x 92mm (3.62”) plastic finger guard	20 g (0.7 oz)
AFM-120NC	Air-flow monitor, NC with 120 x 120mm (4.27”) plastic finger guard	31 g (1.1 oz)
AFM-120NO	Air-flow monitor, NO with 120 x 120mm (4.27”) plastic finger guard	31 g (1.1 oz)

AFM-KIT	Kit includes air-flow switch (AFM-01NC), clip, three plastic guards (80, 92 and 120mm), LED and holder, buzzer, switch and wallmount power supply. Delivered with a complete 10-foot wire assembly.	

25mm (1.0″)

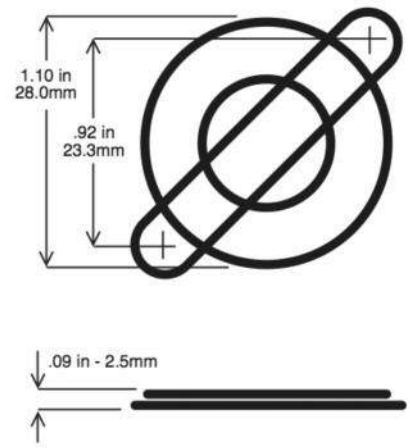

Matching Fan Series:
OD2510

Part No.:	G25-2
Material:	C1008 Steel
Wire Dia (Ring):	1.4mm
Wire Dia (Rib):	1.4mm
Ring Spacing:	Meets 6.35mm plug gauge test
Separation Force:	220 lbs. on welds
Fits:	25mm (1″) fans
Plating:	Bright Nickel Chrome
Options:	Additional plating materials are available by special order.

40mm (1.57″)

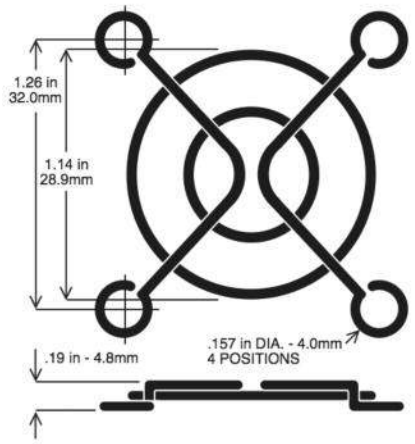

Matching Fan Series:
OD4010,
OD4020,
OD4028

Part No.:	G40-2
Material:	C1008 Steel
Wire Dia (Ring):	1.6mm
Wire Dia (Rib):	1.6mm
Ring Spacing:	Meets 6.35mm plug gauge test
Separation Force:	220 lbs. on welds
Fits:	40mm (1.57″) fans
Plating:	Bright Nickel Chrome
Options:	Additional plating materials are available by special order.

52mm (2.05″)

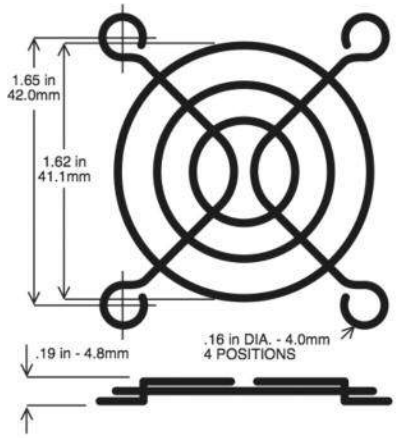

Matching Fan Series:
OD5210
OD5010

Part No.:	G50-3
Material:	C1008 Steel
Wire Dia (Ring):	1.6mm
Wire Dia (Rib):	1.6mm
Ring Spacing:	Meets 6.35mm plug gauge test
Separation Force:	220 lbs. on welds
Fits:	52mm (2.05″) fans
Plating:	Bright Nickel Chrome
Options:	Additional plating materials are available by special order.

60mm (2.36")

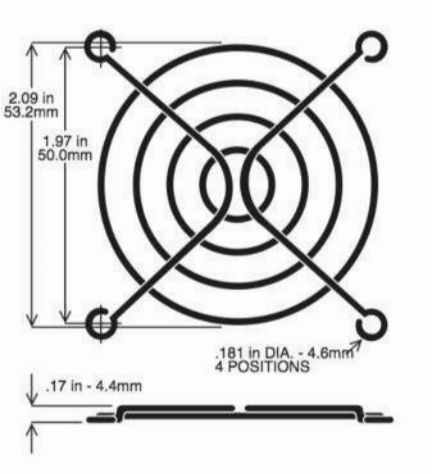

Matching Fan Series: OD6010, OD6015, OD6020, OD6025, OA60

Part No.:	G60-4
Material:	C1008 Steel
Wire Dia (Ring):	1.6mm
Wire Dia (Rib):	1.6mm
Ring Spacing:	Meets 6.35mm plug gauge test
Separation Force:	220 lbs. on welds
Fits:	60mm (2.36") fans
Plating:	Bright Nickel Chrome
Options:	Additional plating materials are available by special order.

80mm (3.15")

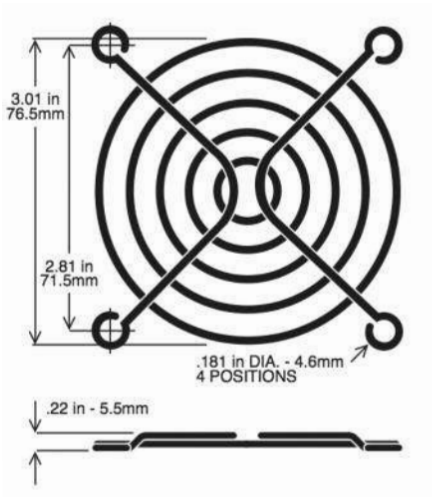

Matching Fan Series: OD8015, OD8020, OD8025, OD8038, OA825, OA80

Part No.:	G80-18 and G80-18B [Black finish]
Material:	C1008 Steel
Wire Dia (Ring):	1.8mm
Wire Dia (Rib):	1.8mm
Ring Spacing:	Meets 6.35mm plug gauge test
Separation Force:	220 lbs. on welds
Fits:	80mm (3.15") fans
Plating:	Bright Nickel Chrome or Black
Options:	Additional plating materials are available by special order.

92mm (3.62")

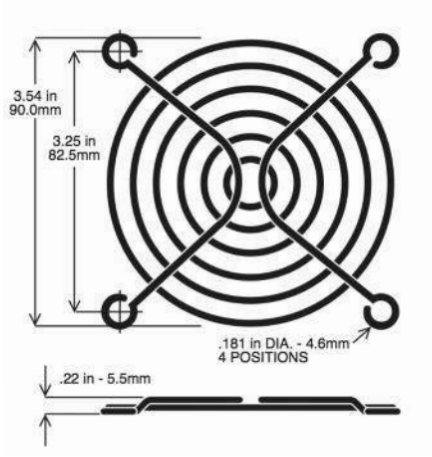

Matching Fan Series: OD9220, OD9225, OA92, OA938

Part No.:	G92-16 and G92-16B [Black finish]
Material:	C1008 Steel
Wire Dia (Ring):	1.6mm
Wire Dia (Rib):	1.6mm
Ring Spacing:	Meets 6.35mm plug gauge test
Separation Force:	220 lbs. on welds
Fits:	92mm (3.65") fans
Plating:	Bright Nickel Chrome or Black
Options:	Additional plating materials are available by special order.

120mm (4.7”)

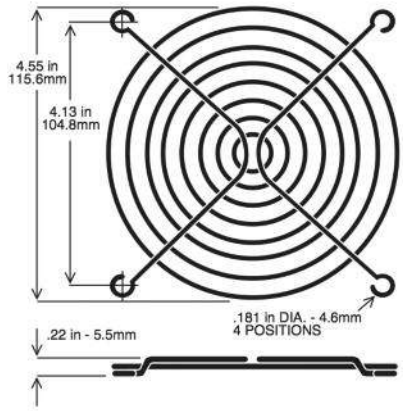

Matching Fan Series: OD1225, OD1238, OA125, OA109, OA4715

Part No.:	G109-15A and G109-15AB [Black finish]
Material:	C1008 Steel
Wire Dia (Ring):	1.8mm
Wire Dia (Rib):	1.8mm
Ring Spacing:	Meets 6.35mm plug gauge test
Separation Force:	220 lbs. on welds
Fits:	120mm (4.7”) fans
Plating:	Bright Nickel Chrome or Black anodized
Options:	Additional plating materials are available by special order.

120mm (4.7”)

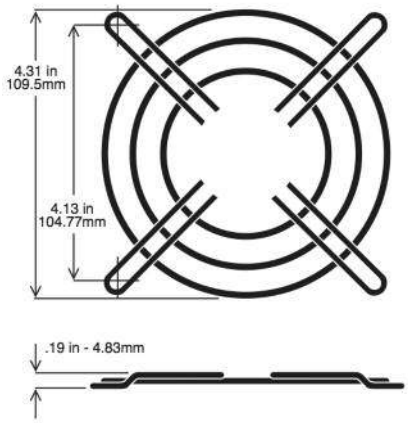

Matching Fan Series: OD1225, OD1238, OA125, OA109, OA4715

Part No.:	G109-3A
Material:	C1008 Steel
Wire Dia (Ring):	1.6mm
Wire Dia (Rib):	1.6mm
Ring Spacing:	Meets 6.35mm plug gauge test
Separation Force:	220 lbs. on welds
Fits:	120mm (4.7”) fans
Plating:	Bright Nickel Chrome
Options:	Additional plating materials are available by special order.

120mm (4.7”)

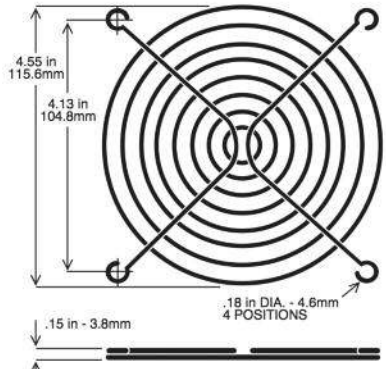

Matching Fan Series: OD1225, OD1238, OA125, OA109, OA4715

Part No.:	G109-15B
Material:	C1008 Steel
Wire Dia (Ring):	1.8mm
Wire Dia (Rib):	1.8mm
Ring Spacing:	Meets 6.35mm plug gauge test
Separation Force:	220 lbs. on welds
Fits:	120mm (4.7”) fans
Plating:	Bright Nickel Chrome
Options:	Additional plating materials are available by special order.

120mm (4.7”)

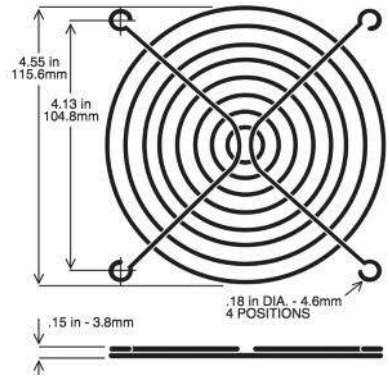

Matching Fan Series: OD1225, OD1238, OA125, OA109, OA4715

Part No.:	G109-15B-1
Material:	C1008 Steel
Wire Dia (Ring):	1.8mm
Wire Dia (Rib):	2.3mm
Ring Spacing:	Meets 6.35mm plug gauge test
Separation Force:	220 lbs. on welds
Fits:	120mm (4.7”) fans
Plating:	Black
Options:	Additional plating materials are available by special order.

127mm (5.0”)

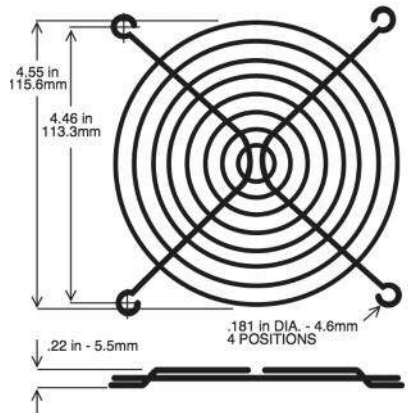

Matching Fan Series:
OD127,
OA119

Part No.:	G119-8
Material:	C1008 Steel
Wire Dia (Ring):	1.8mm
Wire Dia (Rib):	2.3mm
Ring Spacing:	Meets 6.35mm plug gauge test
Separation Force:	220 lbs. on welds
Fits:	127mm (5”) fans
Plating:	Bright Nickel Chrome
Options:	Additional plating materials are available by special order.

172mm (6.7”)

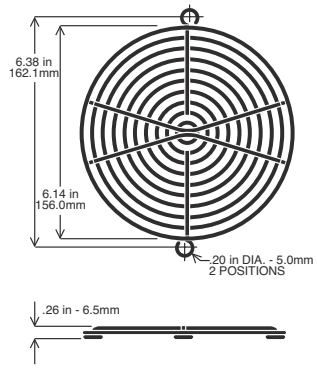

Matching Fan Series:
OD172,
OA162S
OA172,
OA5920

Part No.:	G172-10HA and G172-10HAB [Black]
Material:	C1008 Steel
Wire Dia (Ring):	1.8mm
Wire Dia (Rib):	2.3mm
Ring Spacing:	Meets 6.35mm plug gauge test
Separation Force:	220 lbs. on welds
Fits:	162 and 172mm fans
Plating:	Bright Nickel Chrome or Black
Options:	Additional plating materials are available by special order.

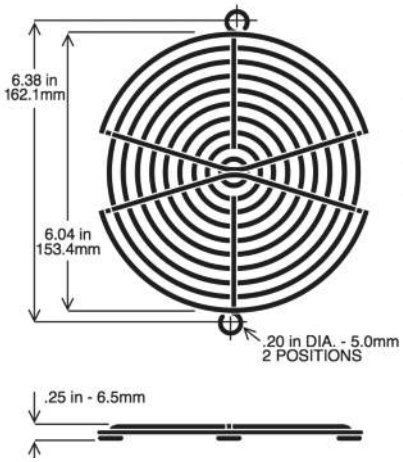

Matching Fan Series:
OD172,
OA162-5E
OA172S,
OA5920

Part No.:	G172-10H and G172-10HB [Black]
Material:	C1008 Steel
Wire Dia (Ring):	1.8mm
Wire Dia (Rib):	2.3mm
Ring Spacing:	Meets 6.35mm plug gauge test
Separation Force:	220 lbs. on welds
Fits:	162 and 172mm fans
Plating:	Bright Nickel Chrome or Black
Options:	Additional plating materials are available by special order.

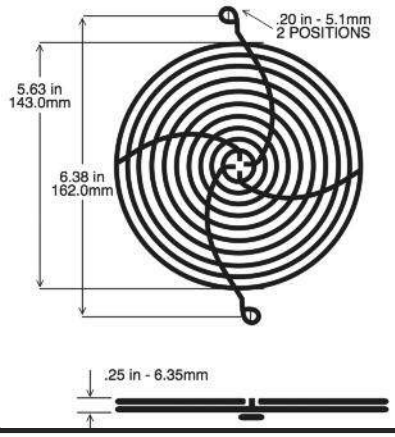

Matching Fan Series:
OD172,
OA162-5E
OA172S,
OA5920

Aerodynamic design helps to reduce fan noise.

Part No.:	G172-10LN
Material:	C1008 Steel
Wire Dia (Ring):	1.6mm
Wire Dia (Rib):	2.0mm
Ring Spacing:	Meets 6.35mm plug gauge test
Separation Force:	220 lbs. on welds
Fits:	162 and 172mm fans
Plating:	Bright Nickel Chrome
Options:	Additional plating materials are available by special order.

180mm (7″)

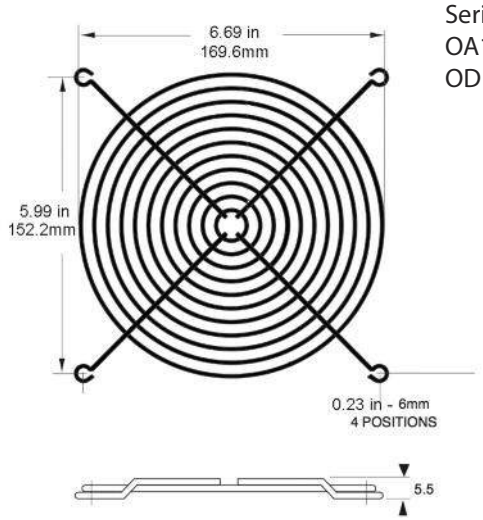

Matching Fan Series: OA180, OD180

Part No.:	G180-11
Material:	C1008 Steel
Wire Dia (Ring):	1.8mm
Wire Dia (Rib):	2.3mm
Ring Spacing:	Meets 6.35mm plug gauge test
Separation Force:	220 lbs. on welds
Fits:	180mm fans
Plating:	Bright Nickel Chrome
Options:	Additional plating materials are available by special order.

254mm (10.0″)

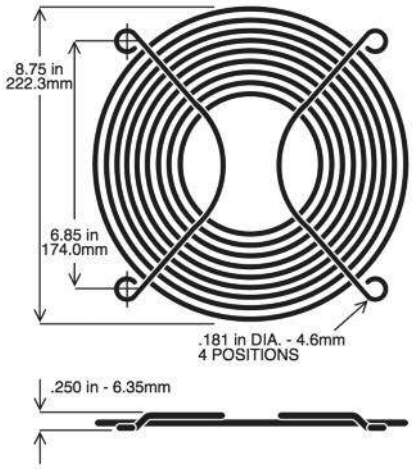

Matching Fan Series: OA254, OD254

Part No.:	G254-10
Material:	C1008 Steel
Wire Dia (Ring):	2.3mm
Wire Dia (Rib):	2.3mm
Ring Spacing:	Meets 6.35mm plug gauge test
Separation Force:	220 lbs. on welds
Fits:	254mm fans
Plating:	Bright Nickel Chrome
Options:	Additional plating materials are available by special order.

254mm (10.0″)

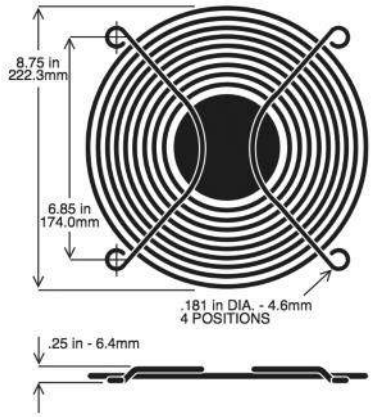

Matching Fan Series: OA254, OD254

Part No.:	G254-10P
Material:	C1008 Steel
Wire Dia (Ring):	2.3mm
Wire Dia (Rib):	2.3mm
Ring Spacing:	Meets 6.35mm plug gauge test
Separation Force:	220 lbs. on welds
Fits:	254mm fans
Plating:	Bright Nickel Chrome
Options:	Additional plating materials are available by special order.

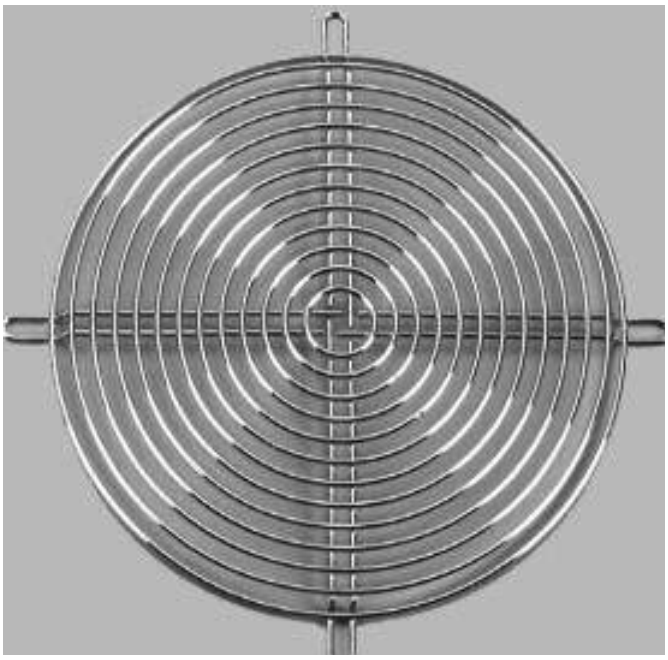

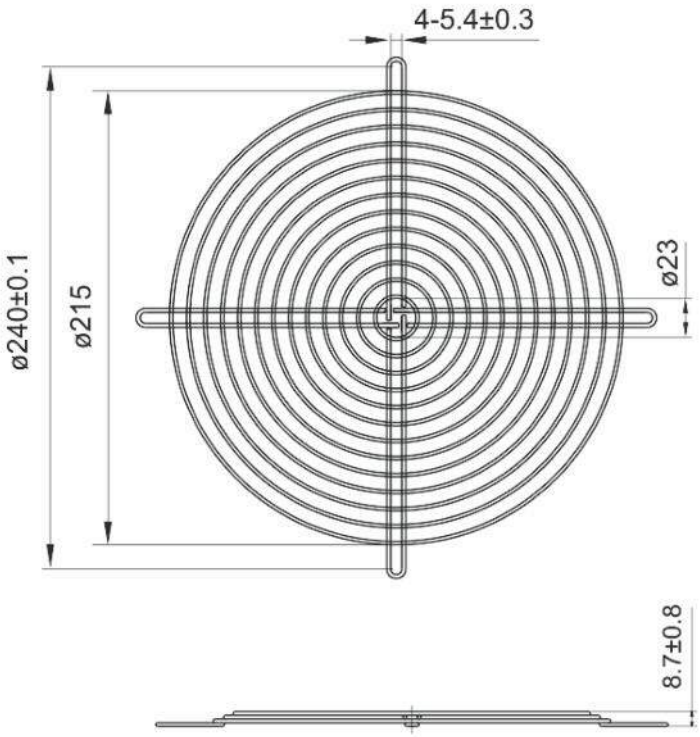

Part No.:	G225, Fan Guard for 225mm fan
Part No.:	G225/PK, 10 Pack G225 guards, boxed
Material:	Steel Wire
Ring Spacing:	Meets 6.35mm plug gauge test
Separation Force:	88 lbs. on welds
Fits:	225mm fans
Plating:	Bright Nickel Chrome
General Tollerance:	Unless noted +/- 0.5mm

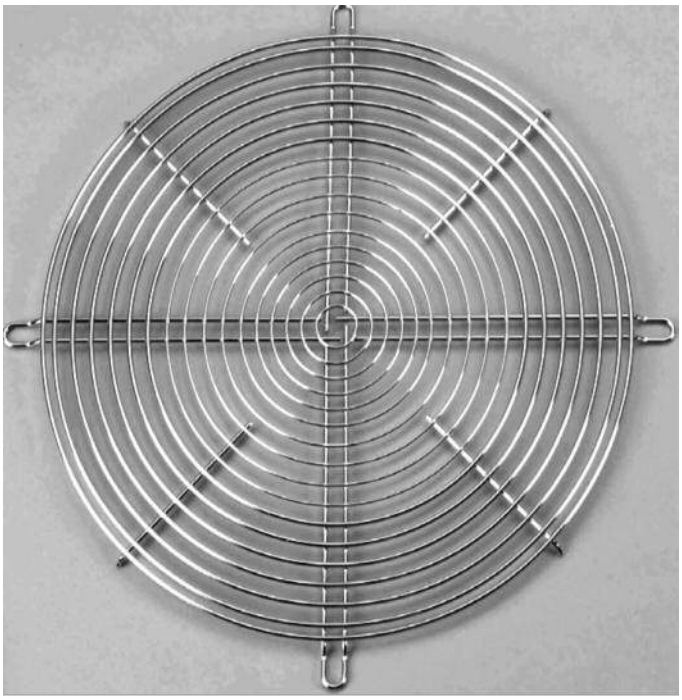

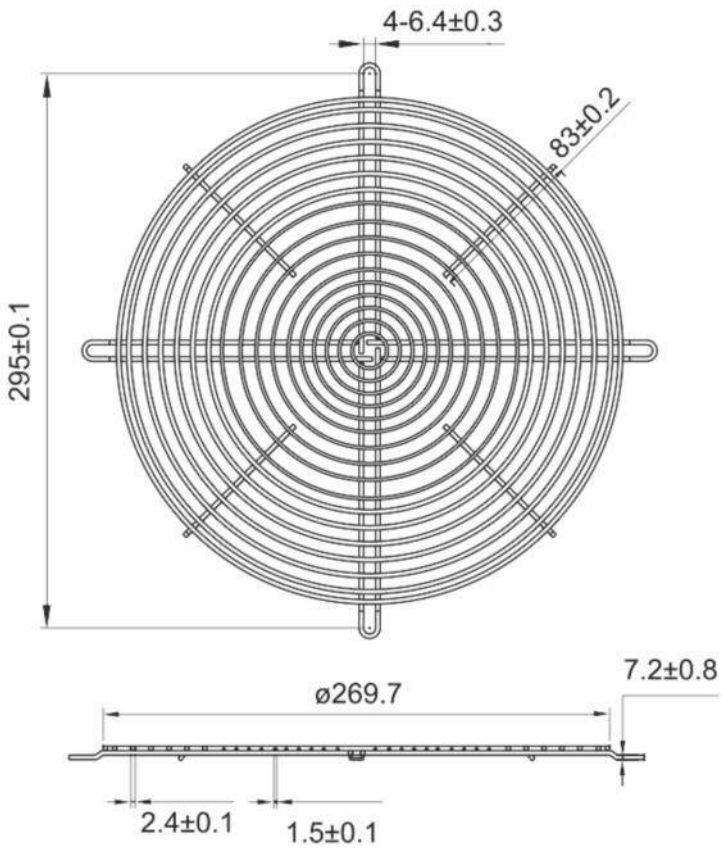

Notes:
1. Material: Steel Wire
2. Finish: Bright Nickel Chrome
3. Welds to withstand 88 lbs. pull force
4. General tolerance unless noted +/-0.5mm
5. Part meets 6.35mm plug gauge test

Part Number	Description
G280	Fan Guard, Chrome, for 280mm fan
G280/PK	10-Pack G280 guards, Boxed

Wire Mesh Guards

Aluminum Fan Filters

Aluminum/Stainless filters offer high levels of air passage while efficiently filtering contaminants and shielding EMI/RFI.

Tightly woven stainless corrugated mesh screen
(30x30, 3/16” Pitch, 1/8” Deep)

Filters may be mounted directly onto the fan or to any other housing.

Finishes:
Mill - Natural Aluminum (suffix “M”)

Black Anodized (suffix “B”)

Part Number	Fan Size	Matching Fan Series
WMG60M WMG60B	60mm (2.36”)	OD6010, OD6015, OD6020, OD6025, OA60
WMG80M WMG80B	80mm (3.15”)	OD8015, OD8020, OD8025, OA825, OA80
WMG92M WMG92B	92mm (3.62”)	OD9220, OD9225, OA92, OA938
WMG120M WMG120B	120mm (4.7”)	OD1225, OD1238, OA125, OA109, OA4715
WMG172M WMG172B	172mm (6.7”)	OD172, OA162, OA172, OA5920

WMG60M
WMG60B

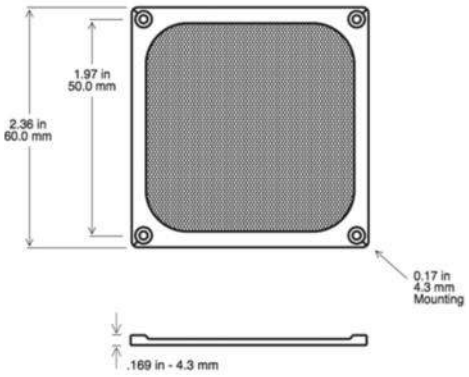

WMG80M
WMG80B

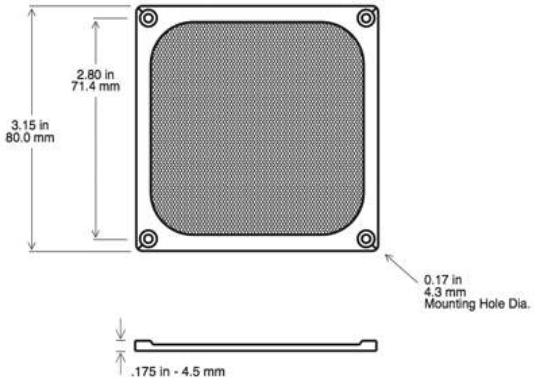

WMG92M
WMG92B

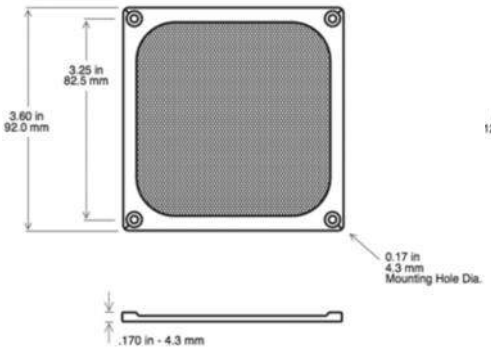

WMG120M
WMG120B

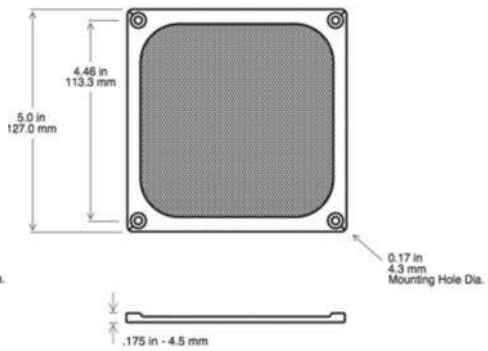

WMG172M
WMG172B

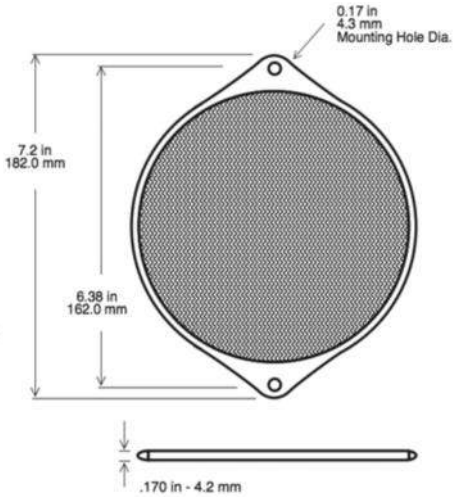

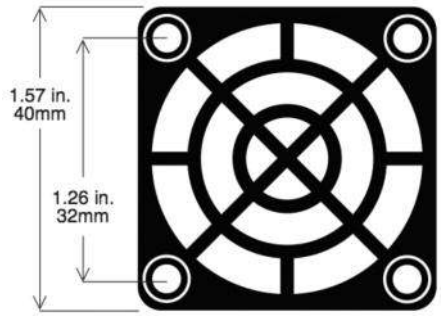

G40P

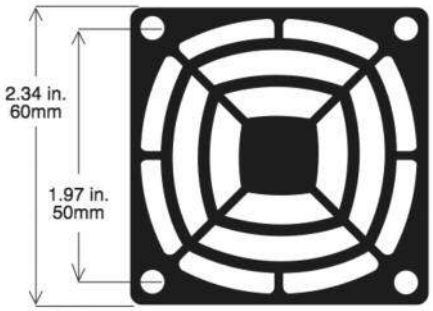

G60P

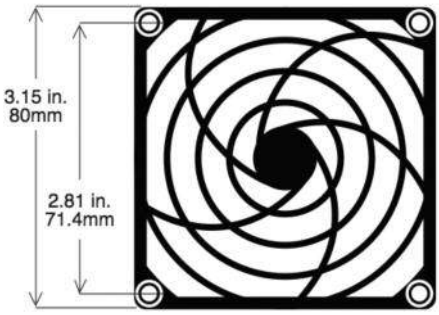

G80P

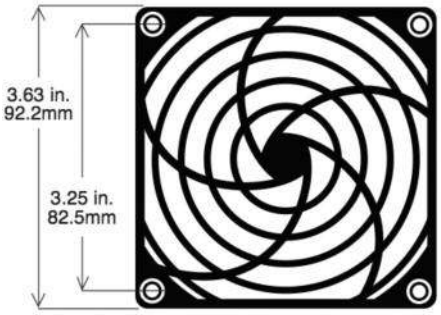

G92P

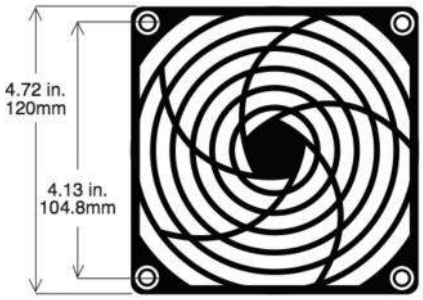

G120P

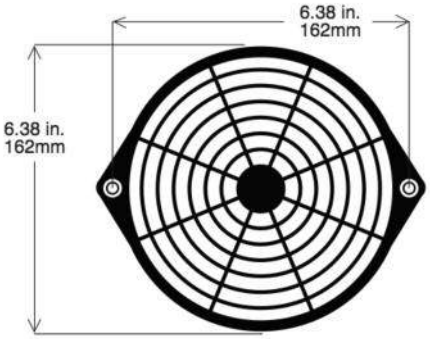

G172P

Part Number	Fan Size	Matching Fan Series
G40P	40mm (1.57”)	OD4010, OD4020, OD4028
G60P	60mm (2.36”)	OD6010, OD6015, OD6020, OD6025, OA60
G80P	80mm (3.15”)	OD8015, OD8020, OD8025, OA825, OA80
G92P	92mm (3.62”)	OD9220, OD9225, OA92, OA938
G120P G120POG	120mm (4.7”)	OD1225, OD1238, OA125, OA109, OA4715
G172P	172mm (6.7”)	OD172, OA162, OA172

Aerodynamic design helps to reduce fan noise

Material:
UL94V-0 plastic

Color:
Black is standard however custom colors are available

No hardware required for installation

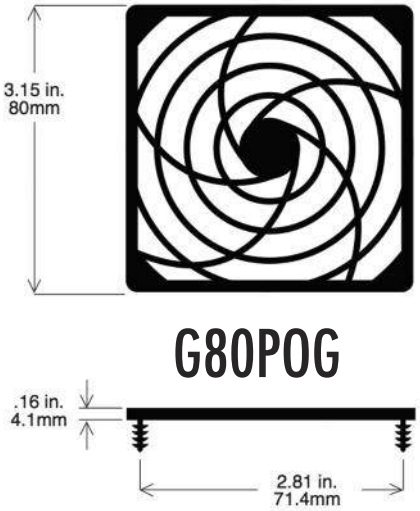

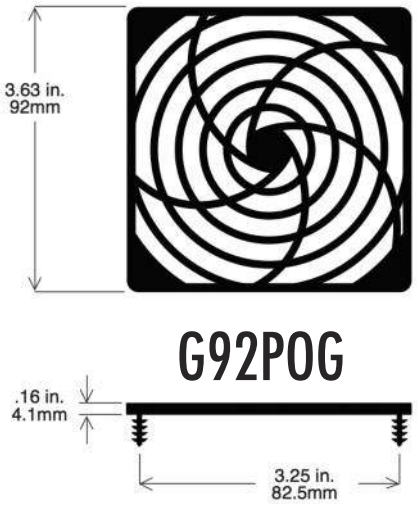

Part Number	Fan Size	Matching Fan Series
G80POG	80mm (3.15”)	OD8015, OD8020, OD8025, OA825, OA80
G92POG	92mm (3.62”)	OD9220, OD9225, OA92, OA938
G120POG	120mm (4.7”)	OD1225, OD1238, OA125, OA109, OA4715
G127POG	127mm (5.0”)	OD172, OA162, OA172

Meets UL/cUL 6.35mm (0.25”) ring spacing requirement

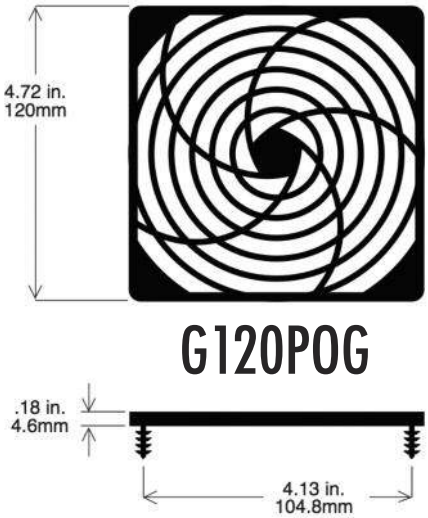

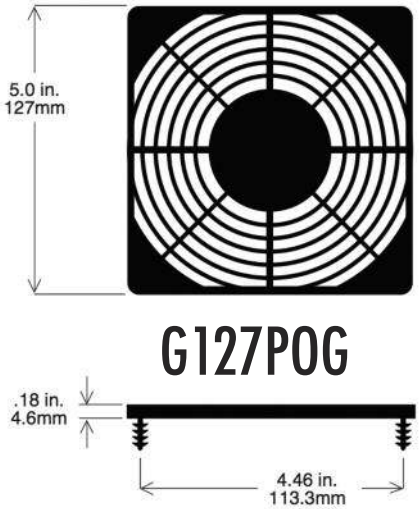

Fan Filter Assemblies

Plastic - UL94V-0

Each filter kit is comprised of a guard which attaches to the fan, a plastic retainer which snaps into the guard and a sheet of filter media in either 30ppi (pores per inch) or 45ppi.

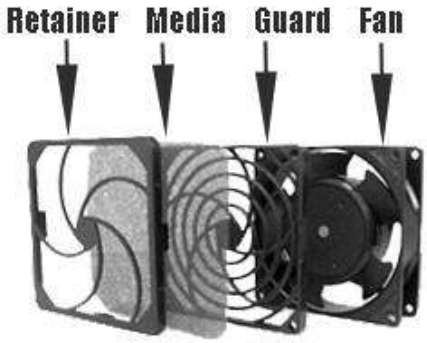

Guards and retainers are high impact plastic. All meet UL94V-0 flammability requirements.

Foam filter meets UL94HF1 smoke generation requirements.

Meets UL/cUL 6.35mm ring spacing requirement.

40mm (1.57")

Assembly Part Nos.	GRM40-30 GRM40-45
Guard Part No.	G40P
Retainer Part No.	R40P
Media Part Nos.	M40-30 or M40-45

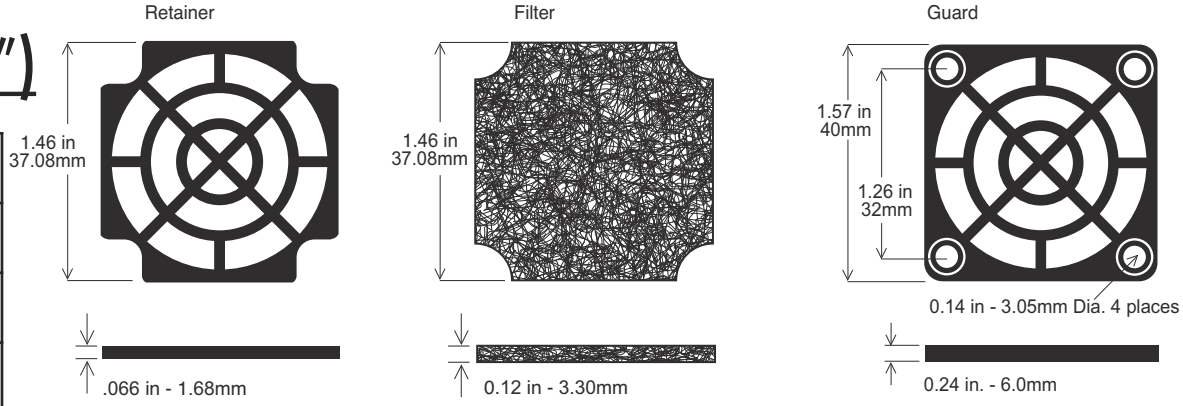

Matching Fan Series: *OD4010, OD4020, OD4028*

60mm (2.36")

Assembly Part Nos.	GRM60-30 GRM60-45
Guard Part No.	G60P
Retainer Part No.	R60P
Media Part Nos.	M60-30 or M60-45

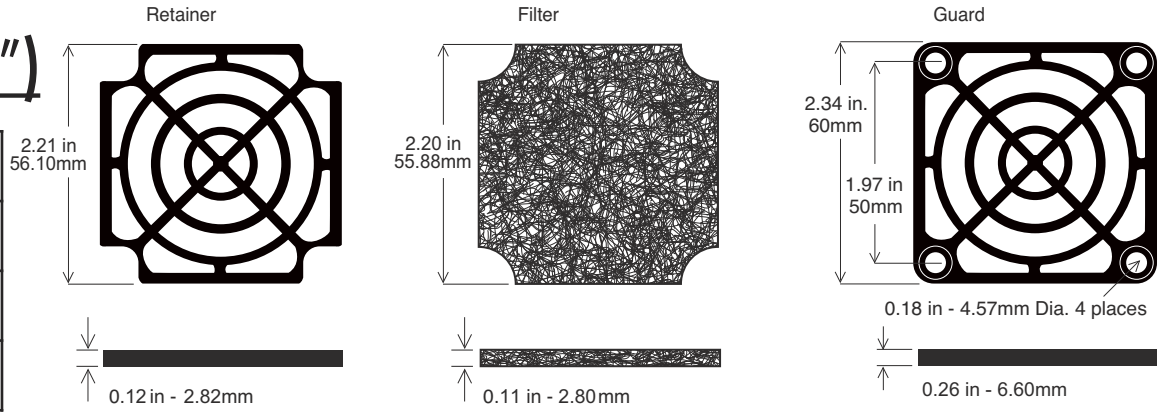

Matching Fan Series: *OD6010, OD6015, OD6020, OD6025, OA60*

80mm (3.15")

Assembly Part Nos.	GRM80-30 GRM80-45
Guard Part No.	G80P
Retainer Part No.	R80P
Media Part Nos.	M80-30 or M80-45

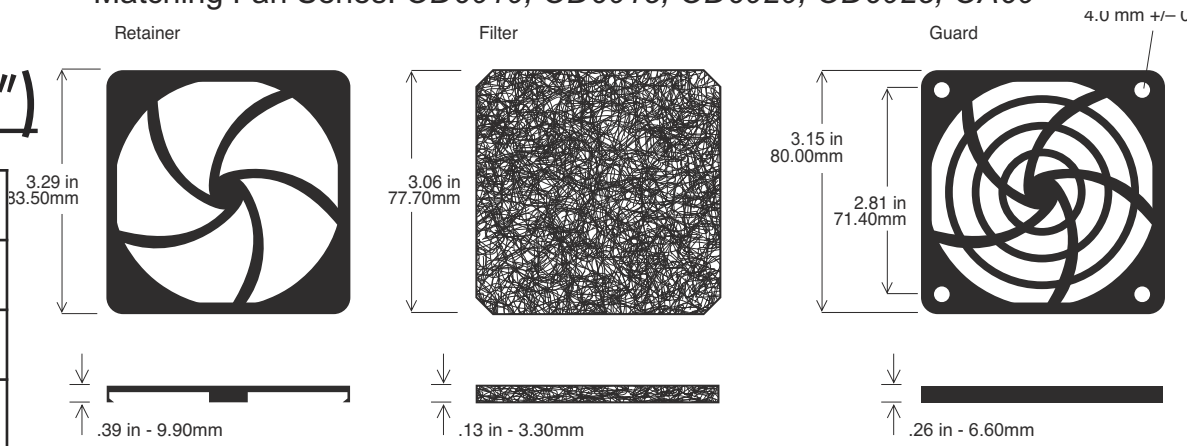

Matching Fan Series: *OD8015, OD8020, OD8025, OD8038, OA825, OA80*

High Impact UL94V-0 plastic Frame

Aerodynamic design helps to reduce fan noise

Meets UL/cUL 6.35mm (0.25") ring spacing requirement

92mm (3.62")

Assembly Part Nos.	GRM92-30 GRM92-45
Guard Part No.	G92P
Retainer Part No.	R92P
Media Part Nos.	M92-30 or M92-45

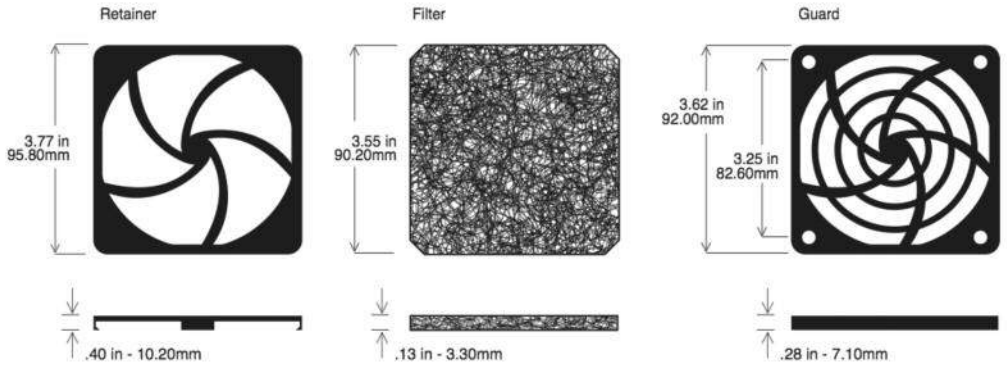

Matching Fan Series: *OD9220, OD9225, OA92, OA938*

120mm (4.7")

Assembly Part Nos.	GRM120-30 GRM120-45
Guard Part No.	G120P
Retainer Part No.	R120P
Media Part Nos.	M120-30 or M120-45

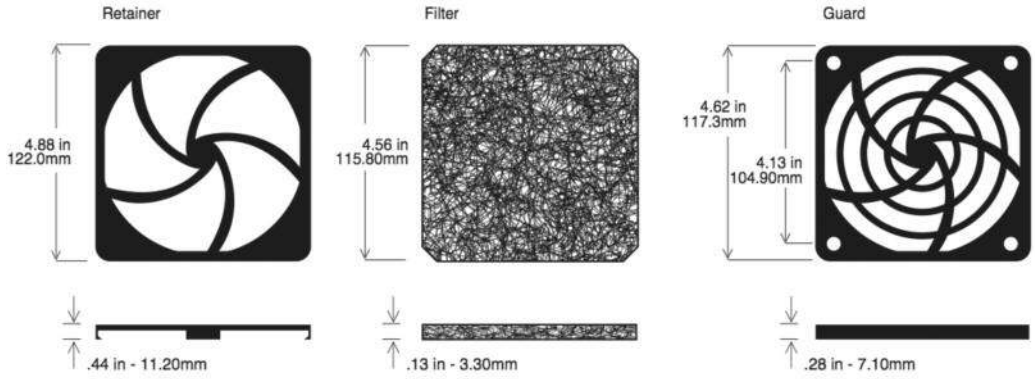

Matching Fan Series: *OD1225, OD1238, OA125, OA109, OA4715*

172mm (6.7")

Assembly Part Nos.	GRM172-30 GRM172-45
Guard Part No.	G172P
Retainer Part No.	R172P
Media Part Nos.	M172-30 or M172-45

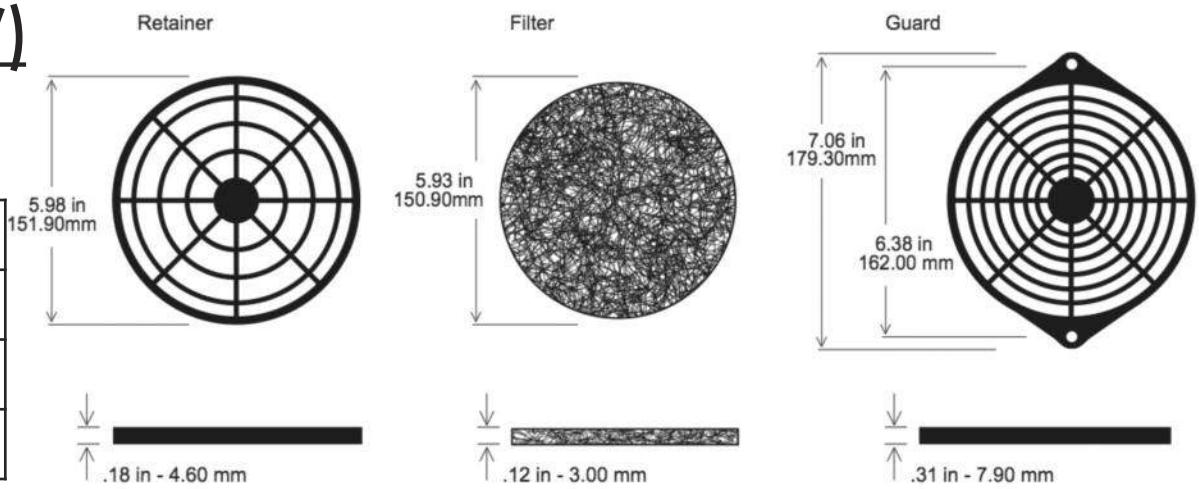

Matching Fan Series: *OD172, OA162, OA172*

Louvered Fan Guards

Filter Kits for 80mm (3.15”) & 92mm (3.62”) Fans

LFG80
Filter kit for
80mm fan

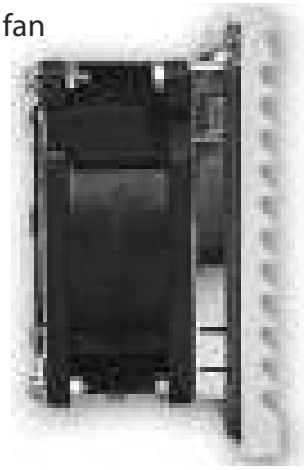

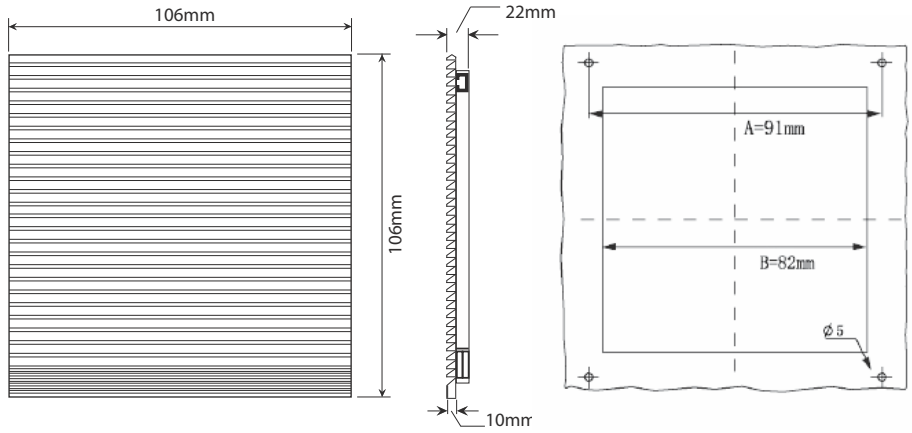

LFG92
Filter Kit for
92mm fan

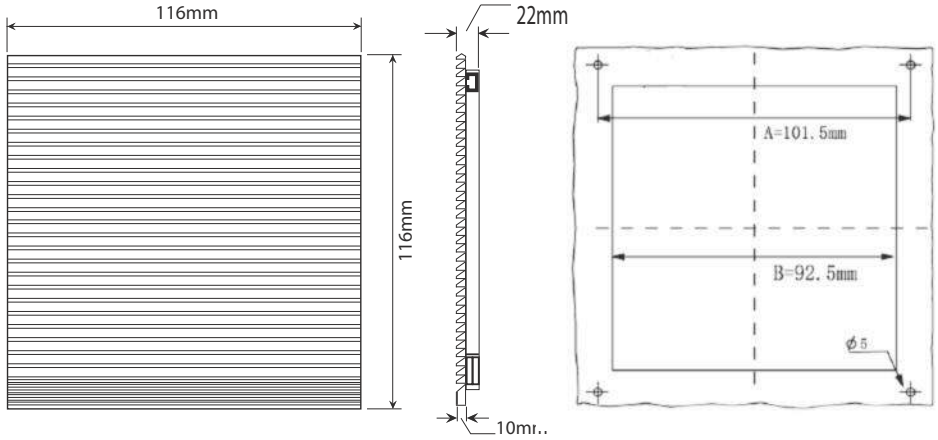

Part Number	LFG80	LFG92
Frame Description	ABS Resin - flame resistant UL94V-0, Vents with screens at 45-degree angle. High foam sealing edge protection grade IP44-IP54 on LFG92 only.	
Filter Mesh Material	Nylon Fiber - Synthetic Resin, filters to 8 microns.	
Color	Gray is standard. Black is available on request. To specify black add “B” to part number. Minimums may apply.	

Installation Method

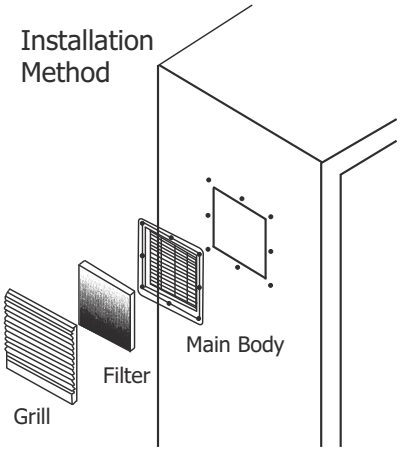

Knight Electronics, Inc.
10557 Metric Drive
Dallas, Texas 75243
214-340-0265

RoHS Compliant

Orion Fans
Information and data is subject to change without prior notification.

Louvered Fan Guards

120mm - 254mm (4.7”- 10”)

LFG120B
Filter kit for
120mm fan

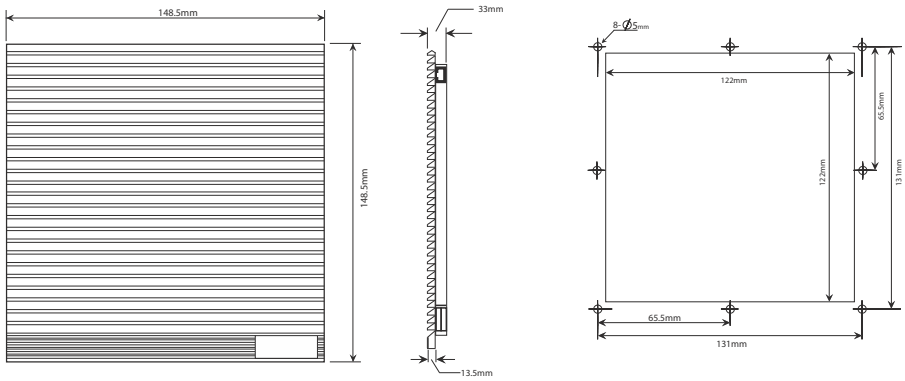

LFG172B
Filter kit for
172mm fan

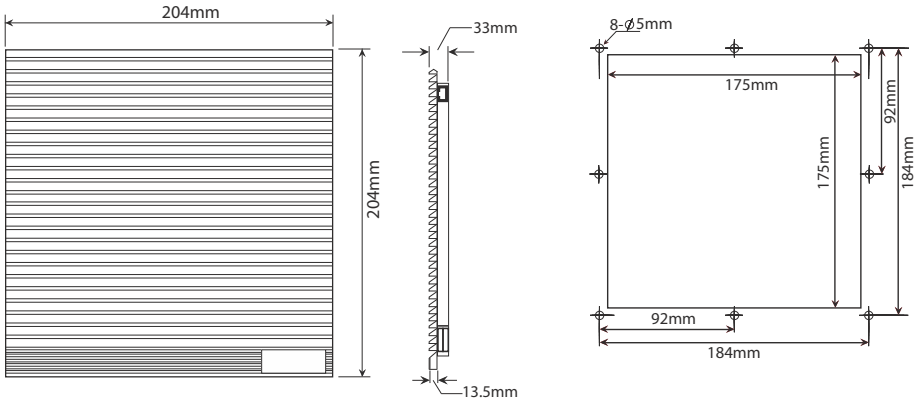

LFG254B
Filter kit for
254mm fan

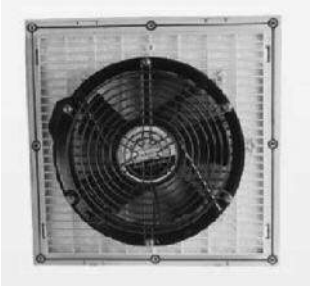

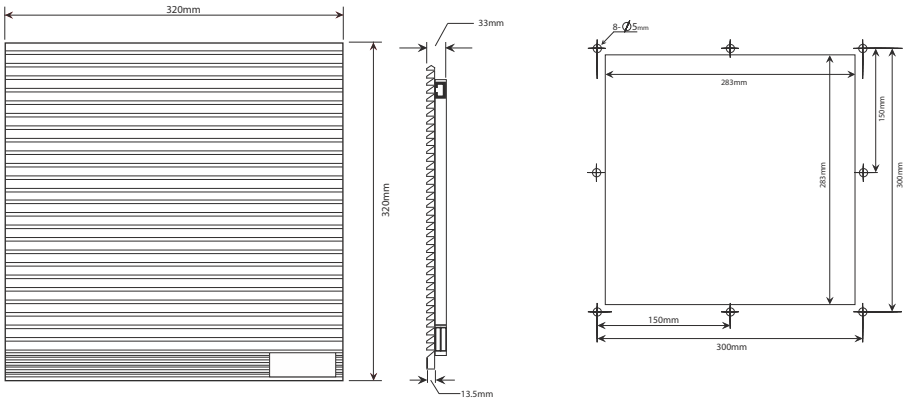

Part Number	LFG120B	LFG172B	LFG254B
Frame Description	ABS Resin - flame resistant UL94V-0, Vents with screens at 45-degree angle. Includes high foam sealing edge - protection grade IP44-IP54.		
Filter Mesh Material	Nylon Fiber - Synthetic Resin, filters to 8 microns.		
Color	Black is standard. Gray is available on request. To specify gray remove “B” from part number. Minimums may apply.		

Filter Media 5-Packs	
Part Number	Description
LFG120BF/PK	For LFG120B
LFG172BF/PK	For LFG172B
LFG254BF/PK	For LFG254B

Knight Electronics, Inc.
10557 Metric Drive
Dallas, Texas 75243
214-340-0265

RoHS Compliant

Orion Fans
Information and data is subject to change without prior notification.

Louvered Fan Guards

Filter Kit For 225mm (8.85")

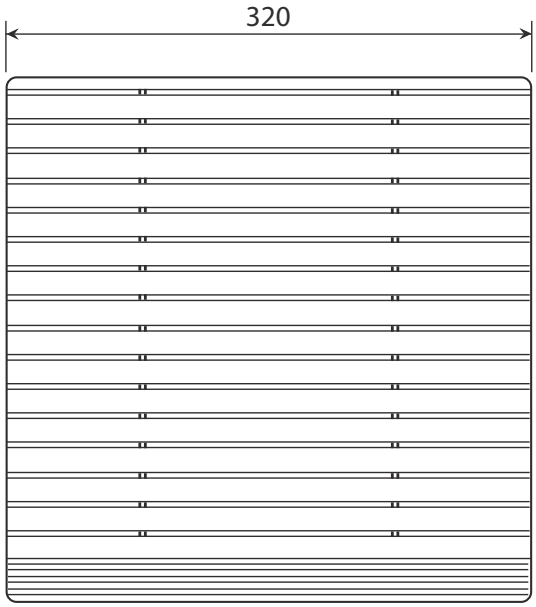

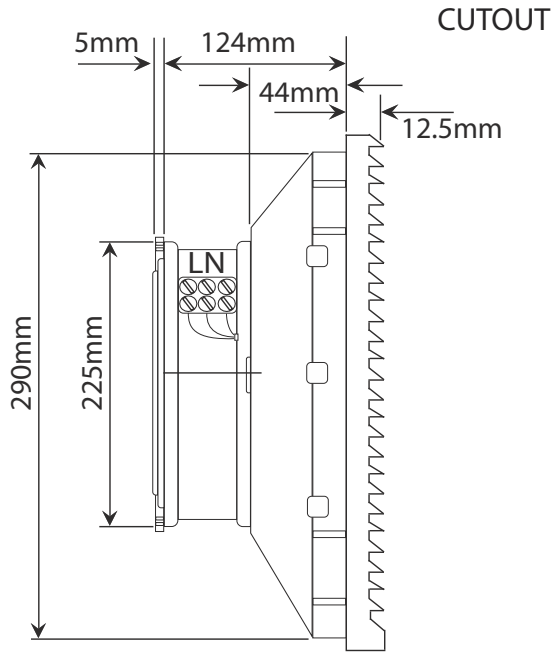

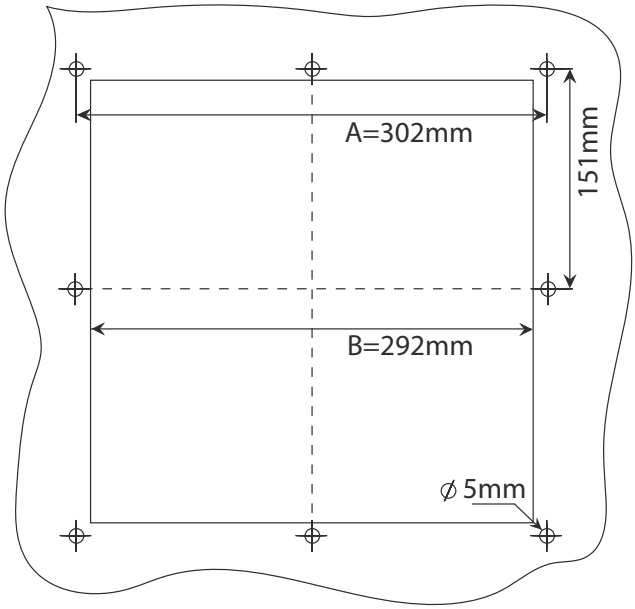

Part Number	LFG225B
Frame Description	ABS Resin - flame resistant UL94V-0, Vents with screens at 45-degree angle. High foam sealing edge available by special order - protection grade IP44-IP54.
Filter Mesh Material	Nylon Fiber - Synthetic Resin, filters to 8 microns.
Color	Black is standard. Gray is available on request. To specify gray remove "B" from part number. Minimums may apply.

Filter Media Replacement 5-Pack: (same used for LFG280G)
LFG280BF/PK

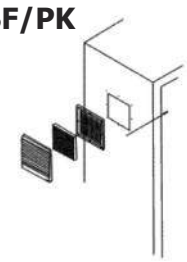

Knight Electronics, Inc.
10557 Metric Drive
Dallas, Texas 75243
214-340-0265

RoHS Compliant

Orion Fans
Information and data is subject to change without prior notification.

Louvered Fan Guards

280mm (11")

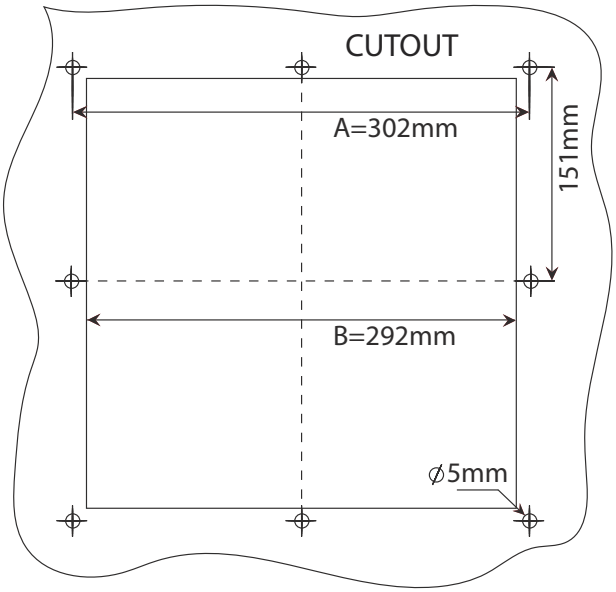

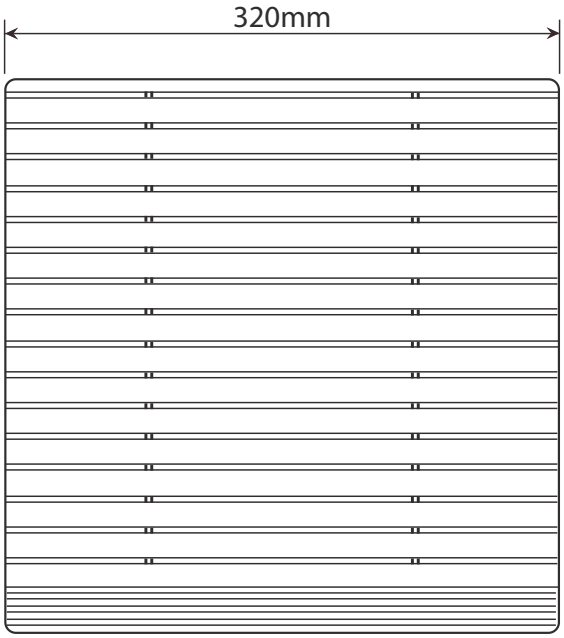

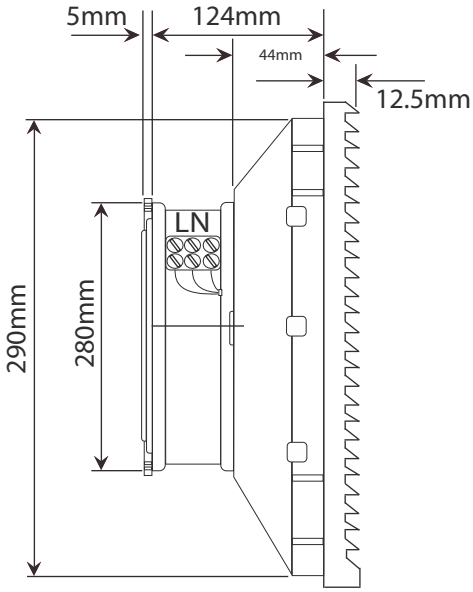

Part Number	LFG280B
Frame Description	ABS Resin - flame resistant UL94V-0, Vents with screens at 45-degree angle. Includes high foam sealing edge - protection grade IP44-IP54.
Filter Mesh Material	Nylon Fiber - Synthetic Resin, filters to 8 microns.
Color	Black is standard. Gray is available on request. To specify gray remove "B" from part number. Minimums may apply.

Filter Media Replacement 5-Pack:
LFG280BF/PK

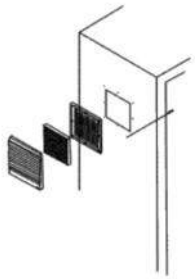

Knight Electronics, Inc.
10557 Metric Drive
Dallas, Texas 75243
214-340-0265

RoHS Compliant

Orion Fans
Information and data is subject to change without prior notification.

Fan Cords & Daisy Chains

For Terminal-type Fans

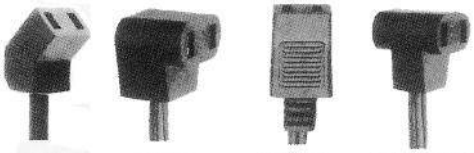

C45 C90 C180 C180T

SPT-1, 2x 18AWG, 105C

Customizing your part number-			
Head	Number of Heads	Lead Length	Termination
C45 -	3DC -	72	P
C45 = 45 deg. C90 = 90 deg. C180 = straight C180T = "T" shaped	*blank = 1 2DC = 2 3DC = 3 4DC = 4 6DC = 6 9DC = 9*	*Lead length in inches. 12" increment is standard for stock product.*	*blank = blunt cut ST = Stripped and Tinned P = NEMA 1-15 AC plug added EURO = European plug*

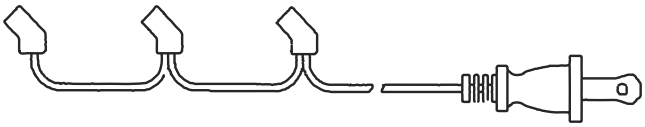

Daisy Chains permit multiple connections of fans to a single power source.

Product is available from stock in 2, 3, 4, 6 and 9 head configurations with lead lengths ranging from 12 inches to 12 feet.

Each head is separated by 12 inches of cord.

Standard product is blunt cut, but cords are usually available with AC plugs on request for an additional charge.

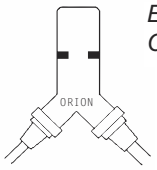

European Daisy Chain Head

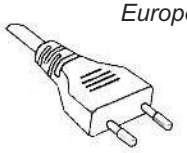

European plug

UL Approved
Rating: 10 amp
125/250VAC

NEMA 1-15 AC plug *C90-type head*

Fans with terminals make connecting and disconnecting power a breeze.

Stocked Cords

Part Number	Features
[12 inch Lead]	
C45-12	*Standard cord, blunt cut, one head*
C90-12	
C180-12	
C180T-12	
[24 inch Lead]	
C45-24	*Standard cord, blunt cut, one head*
C45-24P	*AC plug added*
C45-2DC-24	*2-head daisy chain*
C45-3DC-24	*3-head daisy chain*
C45-4DC-24	*4-head daisy chain*
C45-6DC-24	*6-head daisy chain*
C45-9DC-24	*9-head daisy chain*
C90-24	*Standard cord, blunt cut, one head*
C180-24	
C180T-24	
[36 inch Lead]	
C45-36	*Standard cord, blunt cut, one head*
C90-36	
C180-36	
C180T-36	
[48 inch Lead]	
C45-48	*Standard cord, blunt cut, one head*
C45-48P	*AC plug added*
C90-48	*Standard cord, blunt cut, one head*
C180-48	
C180T-48	
[72 inch Lead]	
C45-72	*Standard cord, blunt cut, one head*
C45-3DC-72P	*3-head daisy chain, AC plug added*
C90-72	*Standard cord, blunt cut, one head*
C90-72P	*AC plug added*
C180-72	*Standard cord, blunt cut, one head*
C180T-72	
[144 inch Lead]	
C90-144P	*AC plug added*
C45-2DC-144P	*2-head daisy chain, AC plug added*

Knight Electronics, Inc.
10557 Metric Drive
Dallas, Texas 75243
214-340-0265

RoHS Compliant

Information and data is subject to change without prior notification.

ORION PART NUMBER CODE:

	1	2	3	4	5	6	7
Example	2	4	1	3	1	67	01

3 Conductors Unshielded, 14 Gauge, SJT, 5-15P Straight, C-13 Straight, 6'7", Black

1: Number of Conductors
- 1 = 2 Conductors
- 2 = 3 Conductors Unshielded
- 3 = 3 Conductors Shielded

2: AWG
- 2 = 12 Gauge
- 4 = 14 Gauge
- 6 = 16 Gauge
- 8 = 18 Gauge
- A = .75mm
- B = 1.0mm
- C = 1.5mm

3: Cord Type:
- 1 = SJT
- 2 = SVT
- 3 = SPT-1
- 4 = SJO
- 6 = H03VV-F
- 7 = H03VVH2-F
- 8 = H05VV-F

4: Plug
- 0 = None
- 1 = 1-15 Standard
- 2 = 1-15P Polarized
- 3 = 5-15P Straight
- 4 = 5-15P Right Angle
- 5 = 5-15P Hospital Grade Clear
- 6 = 5-15P Hospital Grade Gray
- 7 = C-14
- 8 = 6-15P
- 9 = 5-20P
- A = 003A Europe
- B = 006B Europe
- C = 010 Europe
- D = 010A Europe
- E = 012A UK
- F = 015 Australia
- G = 019 Europe

5: Connector
- 0 = None
- 1 = C-13 Straight
- 2 = C-13 Right Angle
- 3 = C-14
- 4 = C-15
- 5 = C-19
- 6 = C-17
- 7 = 022A
- 8 = 002-2

6: Length
- 18 = 1'8"
- 33 = 3'3"
- 50 = 5'0"
- 60 = 6'0"
- 67 = 6'7"
- 76 = 7'6"
- 80 = 8'0"
- 910 = 9'10"
- 100 = 10'0"
- 160 = 16'0"

7: Color Code
- 01 = Black
- 02 = Brown
- 03 = Gray
- 05 = White

INTERNATIONAL CORDAGE TYPES

Cord Type	AWG/Size	No. of Conductors	Temp. Std.	Rating °C Special	Voltage Rating	Description
SJT	18 - 14	3	60	75, 90, 105	300	Service Junior Thermoplastic
SVT	18 - 14	3	60	75, 90, 105	300	Service Vacuum Thermoplastic
SPT-1	18	2 or 3	60	75, 90, 105	300	Service Parallel Thermoplastic 1/64" Insulation
SPT-2	18 - 16	2 or 3	60	75, 90, 105	300	Service Parallel Thermoplastic 2/64" Insulation
SPT-3	18 - 10	2 or 3	60	75, 90, 105	300	Service Parallel Thermoplastic 3/64 Insulation
SJTW-A	18 - 14	3	60	75, 90, 105	300	Service Junior Thermoplastic - Outdoor Use
HPN	18 - 16	2 or 3	90	105	300	Heater Parallel Neoprene

Note: SJ, SJD, SJTO, SO, SV and SVO cordage is available by special order. Minimums may apply.

INTERNATIONAL CORDAGE TYPES

H 0 5 V V _ _ F 3 G 0 7 5

Types
- Harmonized . . . . . H
- Other Standard . . . . . A

Voltage Rating
- 300/300V 03
- 300/500V 05
- 450/750 07

Conductor Insulation
- PVC V
- Rubber (Natural or Synthetic) . . . . . R
- Polychloroprene Rubber . N
- Silicone Rubber . . . . . S
- Glass FIber Construction . J

Cable Jacket
- PVC V
- Rubber (Natural or Synthetic) . . . . . R
- Polychloroprene Rubber . N
- Textile Construction . . . . T

Dimensions of Conductor
- _ . . . . . .in mm²
- G . . . . . .with ground wire
- X . . . . . .without ground wire

Number of Conductors

Conductor Types
- U . . . . . .Solid
- R . . . . . .Stranded
- K . . . . . .Fine wire-Fixed install
- F . . .Fine wire-flexible cordage
- H .Extra-fine wire-flex. cordage
- Y . . . . . .Tinsel cord

Construction Detail
- H . . . . . .Flat, separate cable
- H2 . . .Flat, non-separate cable

Special Components
- _ . . . . . .(Rarely Used)

INTERNATIONAL APPROVALS:

Austria, Belgium, Denmark, Italy

Netherlands, Japan, Canada, United States, Germany, Australia

France, Finland, Sweden, United Kingdom, Switzerland, United Kingdom, Norway

END CUTS

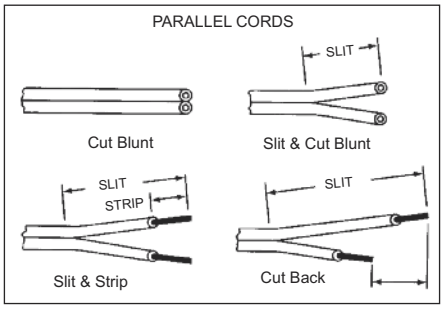

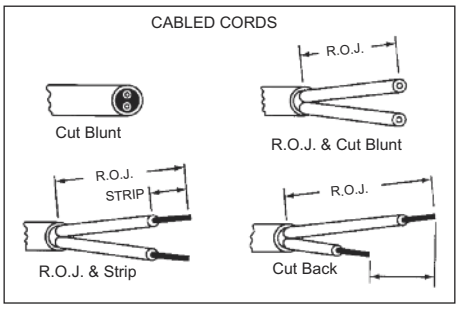

STANDARD PUT-UPS

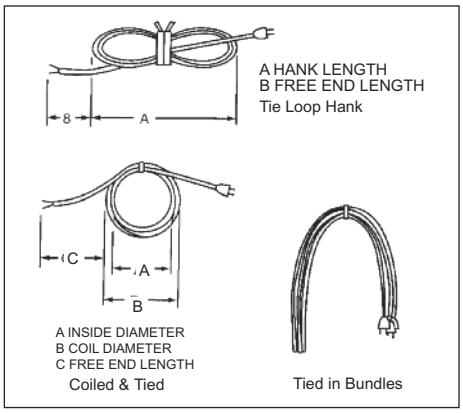

2 CONDUCTOR POWER CORDS

ORION Part Number	AWG	Cord Type	Length	NEMA Plug	NEMA Connector	Rating Amps @125VAC
18320-60-01	18	SPT-1	6'0"	1-15P	—	10
18320-90-01	18	SPT-1	9'0"	1-15p	—	10

5-15

3 CONDUCTOR POWER CORDS UNSHIELDED

5-20

6-15

ORION Part Number	AWG	Cord Type	Length	NEMA Plug	NEMA Connector	Rating Amps @125VAC
24130-67-01	14	SJT	6'7"	5-15P	—	15
24130-910-01	14	SJT	9'10"	5-15P	—	15
26130-67-01	16	SJT	6'7"	5-15P	—	13
26130-910-01	16	SJT	9'10"	5-15P	—	13
26180-910-01	16	SJT	9’10”	6-15P	—	13
26190-910-01	16	SJT	9’10”	5-20P	—	13
28180-910-01	18	SJT	9’10”	6-15P	—	13
28190-910-01	18	SJT	9’10”	5-20P	—	13
28130-67-01	18	SJT	6'7"	5-15P	—	10
28130-80-01	18	SJT	8’0”	5-15P	—	10
28130-910-01	18	SJT	9'10"	5-15P	—	10
28230-67-01	18	SVT	6'7"	5-15P	—	10
28230-910-01	18	SVT	9'10"	5-15P	—	10

ORION Part Number	AWG	Cord Type	Length	NEMA Plug	NEMA Connector	Rating Amps @125VAC
24131-67-01	14	SJT	6'7"	5-15P	C-13	15
24131-910-01	14	SJT	9'10"	5-15P	C-13	15
26131-67-01	16	SJT	6'7"	5-15P	C-13	13
26131-76-01	16	SJT	7'6"	5-15P	C-13	13
26131-910-01	16	SJT	9'10"	5-15P	C-13	13
28131-67-01	18	SJT	6'7"	5-15P	C-13	10
28131-76-01	18	SJT	7'6"	5-15P	C-13	10
28131-910-01	18	SJT	9'10"	5-15P	C-13	10
28231-76-01	18	SVT	7'6"	5-15P	C-13	10
26151-80-03	16	SJT	8'0"	5-15P	C-13	13
26151-100-03	16	SJT	10'0"	5-15P	C-13	13
26161-80-03	16	SJT	8'0"	5-15P	C-13	13
26161-100-03	16	SJT	10'0"	5-15P	C-13	13
26161-140-03	16	SJT	14'0"	5-15P	C-13	13

ORION Part Number	AWG	Cord Type	Length	NEMA Plug	NEMA Connector	Rating Amps @125VAC
28232-76-01	18	SVT	7'6"	5-15P	C-13	10
26132-76-01	16	SJT	7'6"	5-15P	C-13	13
28132-76-01	18	SJT	7'6"	5-15P	C-13	10

3 CONDUCTOR POWER CORDS UNSHIELDED

ORION Part Number	AWG	Cord Type	Length	NEMA Plug	NEMA Connector	Rating Amps @125VAC
26171-33-01	16	SJT	3'3"	C-14	C-13	13
28171-33-01	18	SJT	3'3"	C-14	C-13	10
28271-33-01	18	SVT	3'3"	C-14	C-13	10

ORION Part Number	AWG	Cord Type	Length	NEMA Plug	NEMA Connector	Rating Amps @125VAC
26101-67-01	16	SJT	6'7"	—	C-13	13
26101-910-01	16	SJT	9'10"	—	C-13	13
28101-67-01	18	SJT	6'7"	—	C-13	10
28101-910-01	18	SJT	9'10"	—	C-13	10
28201-76-01	18	SVT	7'6"	—	C-13	10

ORION Part Number	AWG	Cord Type	Length	NEMA Plug	NEMA Connector	Rating Amps @125VAC
26102-67-01	16	SJT	6'7"	—	C-13	13
26102-910-01	16	SJT	9'10"	—	C-13	13
28102-67-01	18	SJT	6'7"	—	C-13	10
28102-910-01	18	SJT	9'10"	—	C-13	10

3 CONDUCTOR POWER CORDS HOSPITAL GRADE UNSHIELDED

NORTH AMERICAN COLOR CODE

ORION Part Number	AWG	Cord Type	Length	NEMA Plug	NEMA Connector	Rating Amps @125VAC
28150-80-03	18	SJT	8'0"	5-15P	—	10
28150-100-03	18	SJT	10'0"	5-15P	—	10
28160-80-03	18	SJT	8'0"	5-15P	—	10
28160-100-03	18	SJT	10'0"	5-15P	—	10

ORION Part Number	AWG	Cord Type	Length	NEMA Plug	NEMA Connector	Rating Amps @125VAC
28151-80-03	18	SJT	8'0"	5-15P	C-13	10
28151-100-03	18	SJT	10'0"	5-15P	C-13	10
28161-80-03	18	SJT	8'0"	5-15P	C-13	10
28161-100-03	18	SJT	10'0"	5-15P	C-13	10

3 CONDUCTOR POWER CORDS SHIELDED

ORION Part Number	AWG	Cord Type	Length	NEMA Plug	NEMA Connector	Rating Amps @125VAC
34131-67-01	14	SJT	6'7"	5-15P	C-13	15
34131-910-01	14	SJT	9'10"	5-15P	C-13	15
36131-67-01	16	SJT	6'7"	5-15P	C-13	13
36131-910-01	16	SJT	9'10"	5-15P	C-13	13
38131-67-01	18	SJT	6'7"	5-15P	C-13	10
38131-910-01	18	SJT	9'10"	5-15P	C-13	10
38231-67-01	18	SVT	6'7"	5-15P	C-13	10
38231-910-01	18	SVT	9'10"	5-15P	C-13	10

ORION Part Number	AWG	Cord Type	Length	NEMA Plug	NEMA Connector	Rating Amps @125VAC
36132-67-01	16	SJT	6'7"	5-15P	C-13	13
36132-910-01	16	SJT	9'10"	5-15P	C-13	13
38132-67-01	18	SJT	6'7"	5-15P	C-13	10
38132-910-01	18	SJT	9'10"	5-15P	C-13	10
38232-67-01	18	SVT	6'7"	5-15P	C-13	10
38232-910-01	18	SVT	9'10"	5-15P	C-13	10

ORION Part Number	AWG	Cord Type	Length	NEMA Plug	NEMA Connector	Rating Amps @125VAC
36171-33-01	16	SJT	3'3"	C-14	C-13	13
38171-33-01	18	SJT	3'3"	C-14	C-13	10
38271-33-01	18	SVT	3'3"	C-14	C-13	10

ORION Part Number	AWG	Cord Type	Length	NEMA Plug	NEMA Connector	Rating Amps @125VAC
36101-67-01	16	SJT	6'7"	—	C-13	13
36101-910-01	16	SJT	9'10"	—	C-13	13
38101-67-01	18	SJT	6'7"	—	C-13	10
38101-910-01	18	SJT	9'10"	—	C-13	10
38201-67-01	18	SVT	6'7"	—	C-13	10
38201-910-01	18	SVT	9'10"	—	C-13	10

ORION Part Number	AWG	Cord Type	Length	NEMA Plug	NEMA Connector	Rating Amps @125VAC
36102-67-01	16	SJT	6'7"	—	C-13	13
36102-910-01	16	SJT	9'10"	—	C-13	13
38102-67-01	18	SJT	6'7"	—	C-13	10
38102-910-01	18	SJT	9'10"	—	C-13	10
38202-67-01	18	SVT	6'7"	—	C-13	10
38202-910-01	18	SVT	9'10"	—	C-13	10

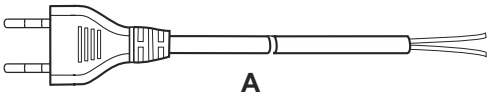
A

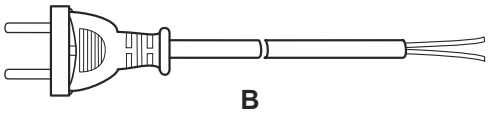
B

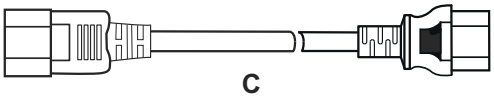
C

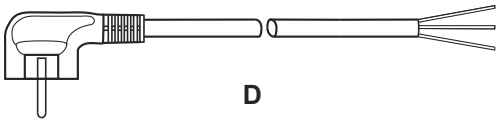
D

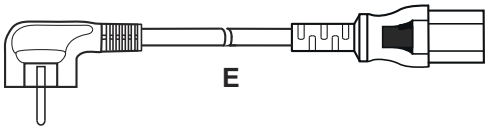
E

F

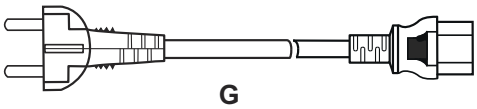
G

EUROPE

Fig.	ORION Number	Cond MM	Cord Type	Length	Plug	Conn	Amps 250VAC
A	1A6B020-01	2X.75	H03VV-F	2.0M	006B	—	2.5
B	1A7G020-01	2X.75	H03VVH2-F	2.0M	019	—	6
C	2B8A825-01	3X1.0	H05VV-F	2.5M	003A	002-2	10
D	2B8C025-01	3X1.0	H05VV-F	2.5M	010	—	10
E	2B8C825-01	3X1.0	H05VV-F	2.5M	010	002-2	10
F	2B8D025-01	3X1.0	H05VV-F	2.5M	010A	—	10
G	2B8D825-01	3X1.0	H05VV-F	2.5M	010A	002-2	10

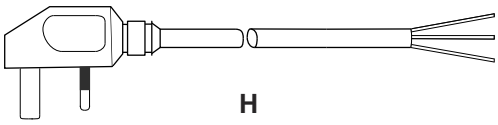
H

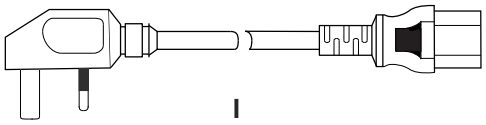
I

UNITED KINGDOM

Fig.	ORION Number	Cond MM	Cord Type	Length	Plug	Conn	Amps 250VAC
H	2B8E025-01	3X1.00	H05VV-F	2.5M	012A	—	10
I	2B8E825-01	3X1.00	H05VV-F	2.5M	012A	002-2	10

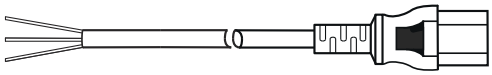
J

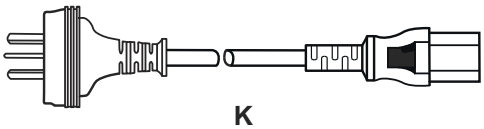
K

AUSTRALIA

Fig.	ORION Number	Cond MM	Cord Type	Length	Plug	Conn	Amps 250VAC
J	2B8F025-01	3X1.00	H05VV-F	2.5M	015	—	10
K	2B8F825-01	3X1.00	H05VV-F	2.5M	015	002-2	10

For Custom power cord applications please fill out the following form and fax it to 214-340-5870 and we will issue a quote on your requirements.

Company Name: _____

Contact: _____

Address: _____

City / State / Zip: _____

Telephone: _____

Web Address: _____ E-mail: _____

Quantity Req.: _____

Delivery Req.: _____

Cordage: _____

North American: XT, HPN, SPT-1, SPT-2, SPT-3, SVT, SJT, SJTW, SJTW-A, SJO, Other (Please Specify)
Europe & UK: HO3VVH2-F, HO3VV-F, HO5VV-F, Other (Please Specify)
Japan: VVF, HVVF, VCTFK, HHFF, VCTF, HVCTF
Australia: LFC-2F, GFC-2F, LFC-2R, GFC-2R, GFC-3R, LFC-3R
Other: Please Specify

Temperature Rating: _____ (60C, 85C, 105C)

No. of Conductors: _____ (2 or 3)

Wire Gauge: _____

North American: 12, 14, 16, 18, 20, Other (Please Specify)
Europe: 0.75mm, 1.00mm
Japan: 1.25mm, 2.00mm

Current Requirement: _____ / _____ (Amps / Volts)

Jacket Color: _____

Color Code: _____ (North American or European)

Shielding: _____ (None, Foil Aluminum, Braid, Foil and Braid)

Overall Length: _____ (Please specify meters or inches)

Plug: _____

IEC Connector: _____

Unterminated Cords: _____ (ROJ to what length?)

_____ (RIJ to what length?)

_____ (Tinned conductors?)

Terminals Required: _____ (Please specify type and associated conductors)

Cross Referencing

Find your replacement fan

Updated: May 22, 2015
Updates in **Bold**

ABOUT THIS CROSS-REFERENCE

The following cross reference material is for general information only. It covers the basic fan models for Comair-Rotron, Sunon, ADDA, ETRI, NMB, Nidec, Delta and EBM/Papst. In each case the crossed material is provided in a way that will allow you to find the appropriate ORION FAN equivalent in terms of size and voltage. Specifics such as CFM (airflow), static pressure curves, power draw and dB (noise) vary greatly among manufacturers and crosses are rarely exact. Therefore some thought must be given to choosing a replacement fan.

Instructions:
1. Find the closest part number match on the table below to the part number that you are crossing and make a note of the ORION recommended replacement.
2. Go to the quick size reference on the index page and find the ORION Series number.
3. Verify that the size (outside dimensions) and voltage (AC vs. DC) are the same as the fan that you are trying to cross.
4. Turn to the appropriate page and compare specifications.
5. If the ORION specifications are not within your tolerances then choose the model that most closely fits your requirements in terms of noise vs. CFM etc.

If you cannot find a suitable replacement for your fan in this catalog then please give us a call. We have several new fan models that are currently under development and many of our existing fans are available with alternate case configurations.

COMAIR-ROTRON	ORION	COMAIR-ROTRON	ORION	COMAIR-ROTRON	ORION	COMAIR-ROTRON	ORION
BD12B3	ODB600-12MB	JQ24B4	OD172AN-24HB	SD48B1	OD8032-48HB	WD12M3	OD1238PT-12LB
BD24B3	ODB600-24MB	JQ48B4	OD172AN-48HB	ST05A3	OD8032-05MB	WD24B3	OD1238PT-24MB
BD24C3	ODB600-24LB	MC12A3	OD1238PT-12HS	ST05B3	OD8032-05MB	WD24C3	OD1238PT-24MB
BD48B3	ODB600-48MB	MC12B3	OD1238PT-12HB	ST05E3	OD8032-05LLB	WD24H3	OD1238PT-24LB
BD48C3	ODB600-48LB	MC12E3	OD1238PT-12LS	ST05F3	OD8032-05LLB	WD24M3	OD1238PT-24LB
BT3A1	OAB800AN-22-1S	MC12G3	OD1238PT-12MS	ST05G3	OD8032-05LB	WD48B3	OD1238PT-48MB
BTA21	OAB800AN-11-1S	MC24A3	OD1238PT-24HS	ST05H3	OD8032-05LB	WR2A1	OA109AP-11-3TS
CD24B3	OD254AP-24HB	MC24B3	OD1238PT-24HB	ST12A3	OD8032-12HS	WR2H1	OA109AP-11-2TS
CLE2L2	OA254AP-11-1WB	MC24H3	OD1238PT-24MB	ST12A3	OD8032-12MB	WR2M1	OA109AP-11-3TS
CLE2T2	OA254AP-11-1TB	MC48B3	OD01238PT-48HB	ST12B3	OD8032-12MB	WR3A1	OA109AP-33-1TS
CLE3L2	OA254AP-22-1WB	MD12B1	OD1238PT-12HB	ST12E3	OD8032-12LLB	WR3H1	OA109AP-22-2TS
CLE3T2	OA254AP-22-1TB	MD12B2	OD1238PT-12HTB	ST12F3	OD8032-12LLB	WX2A1	OA109AP-11-3TS
CR0212LB-G70	OD2510-12HB	MD24B1	OD1238PT-24HB	ST12G3	OD8032-12LB	WX2H1	OA109AP-22-2TS
CR0412HB-C50	OD4020-12HB	MD24B2	OD1238PT-24HTB	ST12H3	OD8032-12LB	WX2M1	OA109AP-11-2TS
CR0412HB-G70	OD4010-12HB	MD48B1	OD1238PT-48HB	ST12K3	OD8032-12HB	WX3H1	OA109AP-11-1TB
CR0512HB-D71	NO CROSS	MD48B2	OD1238PT-48HTB	ST12N3	OD8032-12HB	WX3M1	OA109AP-22-2TB
CR0512HB-G90	OD5210-12HB	MR2B3	OA172SAN-11-1WB	ST24A3	OD8032-24HS	**19041119A**	**OD172SAP-48HB01A**
CR0612HB-D71GL	OD6015-12HB	MR2D3	OA172SAN-11-3TB	ST24A3	OD8032-24MB	**ACCESSORIES**	
CR0624HB-A70GL	OD6025-24HB	MR77B3	OA172SAN-22-1WB	ST24B3	OD8032-24MB	428056	C45-24
CR0812HB-A70GL	OD8025-12HB	MR77D3	OA172SAN-22-3TB	ST24G3	OD8032-24LB	476042	G109-3A
CR0824HB-A70GL	OD8025-24HB	MS12B3	OD1238-12HB	ST24H3	OD8032-24LB	550440	C180-24
CR0912HB-A70GL	OD9225-12HB	MS24B3	OD1238-24HB	ST24K3	OD8032-24HB	554139	R80P
CR0924HB-A70GL	OD9225-24HB	MS48B3	OD1238-48HB	ST24N3	OD8032-24HB	554140	G80P
FE12B3	OD8025-12HB	MU2A1	OA109AP-11-1TS	SU2A1	OA80AP-11-1WB	554141	GRM80-30,45
FE12H3	OD8025-12MB	MU2B1	OA109AP-11-1TB	SU2A5	OA80AP-11-1TB	554142	M80-30,45
FE24B3	OD8025-24HB	MU3A1	OA109AP-22-1TS	SU2A7	OA80AP-11-1WBR	554148	GRM-120-30
FE24H3	OD8025-24MB	MU3B1	OA109AP-22-1TB	SU2B1	OA80AP-11-1WB	554172	G92-16
FN12B3	OD9225-12HB	MX2A1*	OA109AP-11-1TS	SU2B5	OA80AP-11-1TB	554172	G92-16
FN12C3	OD9225-12MB	MX2A3	OA109AP-11-1TS	SU2C1	OA80AP-11-2WB	557219	M92-30,45
FN24B3	OD9255-24HB	MX2B3	OA109AP-11-1TB	SU2E1	OA80AP-11-2WB	557220	R92P
FN24C3	OD9225-24MB	MX3A1*	OA109AP-22-1TS	SU2E7	OA80AP-11-2WBR	557221	G92P
FS12B3	OD6025-12MB	MX3A3	OA109AP-22-1TS	SU2G1	OA80AP-11-1WB	557239	GRM60-30,45
FS12H3	OD6025-12LB	MX3B3	OA109AP-22-1TB	SU2H1	OA80AP-11-1WB	557240	M60-30,45
FS24B3	OD6025-24HB	PQ12B4	OD172SAP-12HB	SU3A1	OA80AP-11-1WB	557241	G60P
FS24H3	OD6025-24LB	PQ12C4	OD172SAP-12HB	SU3B1	OA80AP-22-1WB	557242	R60P
FT12B3	OD1225PT-12HB	PQ24B4	OD172SAP-24HB	SU3H1	OA80AP-22-1WB	572621	G60-4
FT12M3	OD1225PT-12MB	PQ24C4	OD172SAP24-HB	TB24B1	OD180AP-24HB	572621	G60-4
FT24B3	OD1225PT-23HB	PQ48B4	OD172SAP-48HB	TN3E2A	OA180AP-11-11WB	5500648	G80P
FT24M3	OD1225PT-24MB	PQ48C4	OD172SAP-48HB	TN3E2C	OA180AP-11-1TB		
GL12B4	OD127AN-12HB	PT2B3	OA172AP-11-1WB	TN3E3A	OA180AP--22-1WB		
GL24B4	OD127AN-24HB	PT2D3	OA172AP-11-3TB	WD12B3	OD1238PT-12MB		
GL-48B4	OD127AN-48HB	PT77B3	OA172AP-22-1WB	WD12C3	OD1238PT-12MB		
HJQ12B4	OD172AN-12HB	PT7D3	OA172AP-22-3TB	WD12H3	OD1238PT-12LB		

DELTA	ORION	DELTA	ORION	DELTA	ORION	DELTA	ORION
AF0812L	OD8025-12LB	AFB0812H	OD8025-12HB	**AFC0712DD-TP10**	**OD7020-12HHB10A**	EFB1524HE	OD172SAPL-24HB
AFB02505HA	OD2510-05HB	AFB0812HB	OD8015-12HB	**AFC0712D-9Z08**	**OD7025-12HHB10A**	EFB1524HG	OD172SAP-24HB
AFB02512HA	OD2510-12HB	AFB0812M	OD8025-12MB	**AFC1212D-F00**	**OD1225-12HHBXC10A**	EFB1524LE	OD172SAPL-24LB
AFB02512LA	OD5210-12LB	AFB0812MB	OD8015-12MB	**ASB03512MA-AF00**	**OD3510-12LSS01A**	EFB1524LG	OD172SAP-24LB
AFB02512MA	OD2510-12MB	AFB0824H	OD8025-24HB	**BFB0312HA-A**	**ODB3010-12HB**	EFB1524ME	OD172SAPL-24MB
AFB0312HA	OD3010-12HB	AFB0824HB	OD8015-24HB	BFB0712H	ODB7530-12HB	EFB1524MG	OD172SAP-24MB
AFB0312LA	OD3010-12LB	AFB0824L	OD8025-24LB	BFB0724H	ODB7530-24HB	EFB1548HE	OD172SAPL-48HB
AFB0312MA	OD3010-12MB	AFB0824M	OD8025-24MB	EFB0412HD	OD4020-12HB	EFB1548HG	OD172SAP-48HB
AFB0412SHB	**OD4015-12HHBXC**	AFB0824MB	OD8015-24MB	EFB0412L	OD4020-12LB	EFB1548LE	OD172SAPL-48LB
AFB0412SHB-SP04	OD4015-12HBXC10A	AFB0912H	OD9225-12HB	EFB0412LA	OD4010-12LB	EFB1548LG	OD172SAP-48LB
AFB0512HB-TP41	**OD5015-12HB10A**	**AFB0912H-F00**	**OD9225-12HB01A**	EFB0412LD	OD4020-12LB	EFB1548ME	OD172SAPL-48MB
AFB0512HHB-F00	**OD5015-12HB01A**	AFB0912L	OD9225-12LB	EFB0412MAD	OD4010-12MB	EFB1548MG	OD172SAP-48MB
AFB0512VHD	**OD5020-12HB**	AFB0912M	OD9225-12MB	EFB0412MD	OD4020-12MB	FFB0412HN	OD4028-12HB
AFB0612H	OD6025-12HB	AFB0924H	OD9225-24HB	EFB0424HD	OD4020-24HB	FFB0412MN	OD4028-12MB
AFB0612HB	OD6015-12HB	AFB0924L	OD9225-24LB	EFB0424LD	OD4020-24LB	FFB0424HN	OD4028-24HB
AFB0612HD	OD6020-12HB	AFB0924M	OD9225-24MB	EFB0424LD	OD4020-24LB	FFB0424MN	OD4020-24MB
AFB0612L	OD6025-12LB	AFB1212H	OD1225-12HB	EFB0424MD	OD4020-24MB	**GFC0412DS-TP01**	**OD4056-12MB10A**
AFB0612LB	OD6015-12LB	AFB1212HE	OD1238-12HB	**EFB0512HHA-F00**	**OD5010-12HB01A**	**PFB0612UHE-F00**	**OD6038-12MBXC01A**
AFB0612LD	OD6020-12LB	AFB1212L	OD1225-12LB	**EFB0612HHA**	**OD6010-12HB**	**PFR0612XHE-F00**	**OD6038-12HHBXC01A**
AFB0612M	OD6025-12MB	AFB1212LE	OD1238-12LB	**EFB0612HA-F00**	**OD6010-12HB01A**	**PFR0612XHE-SP00**	**OD6038-12HHBXC10A**
AFB0612MB	OD6015-12MB	AFB1212M	OD1225-12MB	EFB0812HF	OD8032-12HB	**PFR0612UHE-F00**	**OD6038-12LBXC01A**
AFB0612MD	OD6020-12MB	AFB1212ME	OD1238-12MB	EFB0812LF	OD8032-12LB	**PFR0612DHE-F00**	**OD6038-12HBXC01A**
AFB0624H	OD6025-24HB	**AFB1212VHE-F00**	**OD1238-12LLBXC01A**	EFB0812MF	OD8032-12MB	**PFR0612DHE-SP00**	**OD6038-12HBXC10A**
AFB0624HD	OD6020-24HB	AFB1224H	OD1225-24HB	EFB0824HF	OD8032-24HB	**PFR0812XHE-SP00**	**OD8038-12HBXE10A**
AFB0624L	OD6025-24LB	AFB1224HE	OD1238-24HB	EFB0824LF	OD8032-24LB	**PFR0848XHE-DV82**	**OD8038-48HBXE10A**
AFB0624LD	OD6020-24LB	AFB1224L	OD1225-23LB	EFB0824MF	OD8032-24MB	**PFR1212DHE-F00**	**OD1238-12HBXJ01A**
AFB0624M	OD6025-24MB	AFB1224LE	OD1238-24LB	EFB1512HE	OD172SAPL-12HB	**PFR1212DHE-SP00**	**OD1238-12HBXJ10A**
AFB0624MD	OD6020-24MB	AFB1224M	OD1225-24MB	**EFB1524SHG-F00**	**OD172SAP-24HBXC01A**	**PFR1212UHE-F00**	**OD1238-12MBXJ01A**
AFB0724M-A	**OD7025-24MB**	AFB1224ME	OD1238-24MB	EFB1512HG	OD172SAP-12HB	**PFR1212UHE-SP00**	**OD1238-12MBXJ10A**
AFB0712VHB-F00	**OD7015-12HHB01A**	**AFB1224SH-T500**	**OD1225-24HHBXCIP55**	EFB1512LE	OD172SAPL-12LB		
AFB0712HHD	**OD7020-12HB**	AFB1248HE	OD1238-48HB	EFB1512LG	OD172SAP-12LB		
AFB0712SH-AB	**OD7025-12HBXC**	AFB1248LE	OD1238-48LB	EFB1512ME	OD172SAPL-12MB		
AFB0712SH-AF00	**OD7025-12HBXC01A**	AFB1248ME	OD1238-48MB	EFB1512MG	OD172SAP-12MB		

EBM/PAPST	ORION	EBM/PAPST	ORION	EBM/PAPST	ORION	EBM/PAPST	ORION
412	OD4010-12MS	4212H	OD1238-12H	6248N	OD172SAP-48HTB	8412GV	OD8025-12HB
414	OD4010-24HS	4212L	OD1238-12LB	6224	OD172SAP-24H	8412L	OD8025-12LB
612	OD6025-12HB	4212M	OD1238-12MB	6248	OD172SAP-48H	8412M	OD8025-12MB
614	OD6025-24HB	4214H	OD1238-24H	7006	OA172AN-11-1TB	8500N	OA80AP-11-1
712F	**OD7015-12MB**	4218C	OD1238-48M	7056	OA172AN-22-1TB	8506N	OA80AP-11-1WB
3312	OD9225-12HB	4218H	OD1238-48H	7112	OD172SAPL-12H	8550N	OA80AP-22-1
3314	OD9225-12HB	4294H	OD1238-24HTB	7114	OD172SAPL-24H	8556N	OA80AP-22-1WB
3412	OD9225-12H	4298H	OD1238-48HTB	7118	OD172SAPL-48H	8800N	OA80AP-11-2
3414	OD9225-24H	4312L	OD1232-12L	7212	OD172SAP-12H	8830N	OA80AP-11-3WS
3906	OA92AP-11-1TB	4312M	OD1232-12M	7214	OD172SAP-24H	8850N	OA80AP-22-2WB
3908	OA92AP-11-1	4500N	OA109AP-11-1	7218	OD172SAP-48H	8880N	OA80AP-22-1TB
3958	OA92AP-22-1	4530N	OA109AP-11-2	7805S	OA162-5E-11-1WB	8908L	OA825AP-11-3
4212	OD1238-12M	4600N	OA109AP-11-1	7806S	OA162-5E-11-1WB	9906L	OA125AP-11-2TB
4214	OD1238-24M	4600X	OA109AP-11-1TB	7855S	OA162-5E-22-1WB	9956L	OA125AP-22-2TB
4292	OD1238-12HTB	4600XP	OA109AP-11-1TB	7856S	OA162-5E-11-1WB	R1G190 Series	OAB190 Series
4312	OD1232-12H	4606N	OA109AP-11-1	8312	OD8032-12H	R2E220-AA40-23	OAB220-22-1
4314	OD1232-24HB	4606X	OA109AP-11-1TB	8314	OD8032-24H	R2E220-AA44-23	OAB220-11-1
4318	OD1232-48HB	4650N	OA109AP-22-1	8318	OD8032-48H	**R4E 400**	**OAB400-22-1**
4908	OA125AP-11-1	4650X	OA109AP-22-1TB	8412	OD8025-12HB	RL90-18/14N	ODB600AN
4958	OA125AP-22-1	4656N	OA109AP-22-1TB	8414	OD8025-24HB	W2E142 Series	OA172SAPL Series
3312L	OD9225-12LB	4658N	OA109AP-22-1	8908	OA825AP-11-1	W2K121 Series	OA119 Series
3312M	OD9225-12MB	4800N	OA109AP-11-3	8958	OA825AP-22-1	W3E200 Series	OAB225 Series
3312V	OD9225-12HB-03	4800X	OA109AP-11-2TB	9906	OA125AP-11-1TB	W2E250 Series	OAB280 Series
3412GMV	OD9225-12MB	4840N	OA109AP-11-1	9956	OA125AP-22-1TB	W2K121-AA15-13	OA119AP-11-2TB
3412L	OD9225-12M	4850X	OA109AP-22-3	8112G	OD8032-12HB	W2K121-AA15-39	OA119AP-11-2TS
3412M	OD9225-12H	4908L	OA125AP-11-2	8112K	OD8032-12HB	W2K121-AA15-01	OA119AP-11-2TB
3906L	OA92AP-11-2TB	6008S	OA172AN-11-1	8124G	OD8032-24HB	W2K121-AA01-13	OA119AP-22-2TB
3908L	OA92AP-11-2	6028S	OA172AN-11-1	8124K	OD8032-24HB	W2K121-AA01-39	OA119AP-22-2TS
412F	OD4010-12MS	6058S	OA172AN-22-1	8312HL	OD8032-12HB	W2K2121-AA01-01	OA119AP-22-2TB
412FH	OD4010-12HS	6078S	OA172AN-22-1	8312L	OD8032-12LB	**ACCESSORIES**	
414F	OD4010-24MS	612L	OD6025-12LB	8312L	OD8032-12L	LZ22N	G80-18
4182NGX	OD1238-12MS	612M	OD6025-12M	8312M	OD8032-12MB	LZ23	G92-16
4182NX	OD1238-12HB	6212M	OD172SAP-12H	8312M	OD8032-12M	LZ24	G172-10HA
4184NGX	OD1238-24MS	6224M	OD172SAP-24H	8312MV	OD8032-12LB	LZ30	G109-15A
4184NHX	OD1238-48HHB	6224N	OD172SAP-24HB	8314H	OD8032-24HB		
4184NX	OD1238-24HB	6224NM	OD172SAP-24HTB	8412GLV	OD8025-12LB		
4188NXM	OD1238-48MB	6248M	OD172SAP-48H	8412GMV	OD8025-12MB		

NMB*	ORION	NMB*	ORION	NMB*	ORION	NMB*	ORION
1004KL-01W-B50	OD2510-05HB	3115PS-12W-B30	OA80AP-11-1WB	4710PS-23W-B30	OA125AP-22-1WB	4715PS-23T-B20	OA109AP-22-1TB
1004KL-04W-B50	OD2510-12HB	3115PS-23T-B10	OA80AP-22-3TB	4715FS-12T-B10	OA109AP11-3TBR	4715PS-23T-B30	OA109AP-22-1TB
1204KL-04W-B50	OD3010-12HB	3115PS-23T-B20	OA80AP-22-2TB	4715FS-12T-B20	OA109AP11-2TBR	5015KL-04T-B50	OD127-12HTB
1404KL-04W-B59-B00	**OD3510-12MB02A**	3115PS-23T-B30	OA80AP-22-1TB	4715FS-12T-B30	OA109AP-11-1TBR	5015KL-04W-B50	OD127-12HB
1604KL-01W-B50	OD4010-05HB	3115PS-23W-B30	OA80AP-22-1WB	4715FS-12T-B40	OA109AP11-1TBR	5915PC-12T-B30	OA172SAPL-11-1TB
1604KL-04W-B50	OD4010-12HB	3610KL-04W-B10	OD9225-12LB	4715FS-12T-B50	OA109AP11-1TBR	5915PC-12W-B30	OA172SAPL-11-1WB
1606KL-05W-B59-L00	**OD4015-24HB02A**	3610KL-04W-B20	OD9225-12MB	4715FS-12W-B30	OA109AP-11-1WBR	5915PC-23T-B30	OA172SAPL-22-1TB
1608KL-01W-B50	OD4020-05HB	3610KL-04W-B30	OD9225-12MB	4715FS-23T-B10	OA109AP22-3TBR	5915PC-23W-B30	OA172SAPL-22-1WB
1608KL-04W-B50	OD4020-12HB	3610KL-04W-B40	OD9225-12HB	4715FS-23T-B20	OA109AP22-2TBR	5920PL-05W-B40	OD172SAP-24HB
2004KL-01W-B59-B00	**OD5010-05MB02A**	3610KL-04W-B50	OD9225-12HB	4715FS-23T-B30	OA109AP-22-1TBR	5920PL-07W-B40	OD172SAP-48HB
2406KL-04W-B50	OD6015-12HB	3610KL-05W-B10	OD9225-24LB	4715FS-23T-B40	OA109AP22-1TBR	5920PL-12T-B30	OD172SAP-11-1TB
2408NL-04W-B50	OD6020-12HB	3610KL-05W-B20	OD9225-24MB	4715FS-23T-B50	OA109AP22-1TBR	5920PL-12W-B30	OD172SAP-11-1WB
2408NL-05W-B50	OD6020-24HB	3610KL-05W-B30	OD9225-24MB	4715FS-23W-B30	OA109AP-22-1WBR	5920PL-23T-B30	OD172SAP-22-1TB
2410ML-04W-B10	OD6025-12LB	3610KL-05W-B40	OD9225-24HB	4715KL-04T-B50	OD1238-12HTB	5920PL-23W-B30	OD172SAP-22-1WB
2410ML-04W-B20	OD6025-12MB	3610KL-05W-B50	OD9225-24HB	4715KL-04W-B10	OD1238-12LB	6820PL-05W-B50	OD172AP-24HB
2410ML-04W-B30	OD6025-12MB	3610PS-12T-B10	OA92AP-11-3TB	4715KL-04W-B20	OD1238-12MB	6820PL-07W-B50	OD172AP-48HB
2410ML-04W-B40	OD9025-12HB	3610PS-12T-B20	OA92AP-11-2TB	4715KL-04W-B30	OD1238-12HB	6820PL-12T-B30	OD172AP-11-1TB
2410ML-04W-B50	OD6025-12HB	3610PS-12T-B30	OA92AP-11-1TB	4715KL-04W-B40	OD1238-12HB	6820PL-12W-B30	OD172AP-11-1WB
2410ML-05W-B50	OD6025-24HB	3610PS-12W-B30	OA92AP-11-1WB	4715KL-04W-B50	OD1238-12HB	6820PL-23T-B30	OD172AP-22-1TB
3106KL-05W-B59-B00	**OD8015-24HB02A**	3610PS-23T-B10	OA92AP-22-3TB	4715KL-05T-B50	OD1238-24HTB	6820PL-23W-B30	OD172AP-22-1WB
3110KL-04W-B10	OD8025-12LB	3610PS-23T-B20	OA92AP-22-2TB	4715KL-05W-B10	OD1238-24LB	**BG1203-B055-000-00**	**ODB1232-24HB**
3110KL-04W-B20	OD8025-12MB	3610PS-23W-B30	OA92AP-22-1WB	4715KL-05W-B20	OD1238-24MB		
3110KL-04W-B30	OD8025-12MB	36110PS-23T-B30	OA92AP-22-1TB	4715KL-05W-B30	OD1238-24HB		
3110KL-04W-B40	OD8025-12HB	4710NL-04W-B40	OD1225-12HB	4715KL-05W-B40	OD1238-24HB		
3110KL-04W-B50	OD8025-12HB	4710NL-04W-B30	OD1225-12MB	4715KL-05W-B50	OD1238-24HB		
3110KL-05W-B10	OD8025-24LB	4710NL-04W-B20	OD1225-12MB	4715KL-07T-B30	OD1238-48HTB		
3110KL-05W-B20	OD8025-24MB	4710NL-04W-B10	OD1225-12LB	4715KL-07W-B30	OD1238-48HB		
3110KL-05W-B30	OD8025-24MB	4712KL-04W-B50	OD1232-12HB	4715MS-12T-B10	OA109AP-11-3TB		
3110KL-05W-B40	OD8025-24HB	4712KL-05W-B50	OD1232-24HB	4715MS-12T-B20	OA109AP-11-2TB		
3110KL-05W-B50	OD8025-24HB	4712KL-07W-B50	OD1232-48HB	4715MS-12T-B30	OA109AP-11-1TB		
3110PS-12T-B30	OA825AP-11-1TB	4710NL-04W-B50	OD1225-12HB	4715MS-12T-B40	OA109AP-11-1TB		
3110PS-12W-B10	OA825AP-11-3WB	4710NL-05W-B10	OD1225-24LB	4715MS-12T-B50	OA109AP-11-1TB		
3110PS-12W-B20	OA825AP-11-2WB	4710NL-05W-B20	OD1225-24MB	4715MS-12W-B30	OA109AP-11-1WB		
3110PS-12W-B30	OA825AP-11-1WB	4710NL-05W-B30	OD1225-24MB	4715MS-23T-B10	OA109AP-22-3TB		
3110PS-23T-B30	OA825AP-22-1TB	4710NL05W-B40	OD1225-24HB	4715MS-23T-B20	OA109AP-22-2TB		
3110PS-23W-B10	OA825AP-22-3WB	4710NL-05W-B50	OD1225-24HB	4715MS-23T-B30	OA109AP-222-1TB		
3110PS-23W-B20	OA825AP-22-2WB	4710PS-12T-B10	OA125AP-11-1TB	4715MS-23T-B40	OA109AP-22-1TB		
3110PS-23W-B30	OA825AP-22-1WB	4710PS-12T-B20	OA125AP-11-1TB	4715MS-23T-B50	OA109AP-22-1TB		
3112KL-05W-B69-E00	**OD8032-24HHB02A**	4710PS-12T-B30	OA125AP-11-1TB	4715MS-23W-B30	OA109AP-22-1WB		
3115FS-12T-B30	OA80AP11-1TB	4710PS-12WB30	OA125AP-11-1WB	4715PS-12T-B10	OA109AP-11-3TB		
3115PS-12T-B10	OA80AP-11-3TB	4710PS-23T-B10	OA125AP-22-3TB	4715PS-12T-B20	OA109AP-11-2TB		
3115PS-12T-B20	OA80AP-11-2TB	4710PS-23T-B20	OA125AP-22-2TB	4715PS-12T-B30	OA109AP-11-1TB		
3115PS-12T-B30	OA80AP-11-1TB	4710PS-23T-B30	OA125AP-22-1TB	4715PS-23T-B10	OA109AP-22-3TB		

*NMB suffix B50 or B40 is generally high speed and B10 is generally low speed.

ORION uses H, M, L (High, Medium, Low) for DC fans and 1, 2, or 3 (High, Medium, Low) for AC fans.

NIDEC	ORION	NIDEC	ORION	NIDEC	ORION	NIDEC	ORION
TA100 DC		**TA300**		A30108	OA109AP-11-1	B33050	OD1238-12MB
C34230	OD2510-05MB	A30473	OA80AP-11-1TS	A30122	OA109AP-11-1	B33393	OD1238-24MB
C34237	OD2510-12MB	A30472	OA80AP-22-1TS	A30135	OA109AP-22-1	B34188-16	OD1238-24MB
C34245	OD2510-05HB	A30477	OA80AP-11-1TB	A30390	OA109AP-11-2	B33534-81A	OD1238-24HB
C34240	OD2510-12HB	A30479	OA80AP-22-1TB	A30426	OA109AP-22-2	**TA500**	
TA120 DC		A30716	OA80AP-11-2TS	A30433	OA109AP-11-2	A30700	OA119AP-11-2TS
C34449	OD3010-05HB	A32250	OA80AP-11-1TS	A30444	OA109AP-22-2	A307040	OA119AP-22-2TS
TA150 DC		A32353	OA80AP-22-1TS	A30769	OA109AP-11-3	A30200	OA119AP-11-1TS
C33830	OD4010-12MB	A32354	OA80AP-11-2TS	A30925	OA109AP-22-3	A30324	OA119AP-22-1TS
C33842	OD4010-12HB	M33406	OD8025-12HB	A30926	OA109AP-11-3	A30330	OA119AP-11-1TB
C33903	OD4010-24HB	M33407	OD8025-24HB	A30927	OA109AP-22-3	A30332	OA119AP-22-1TB
C33920	OD4010-24MB	M33409	OD8025-12MB	A32655	OD1225-12HB	**TA600 DC Series**	
C34246	OD4010-05HB	M33411	OD8025-24MB	A32670	OD1225-24HB	A32550	OD172SAP-12HB
C34247	OD4010-05MB	M33412	OD8025-12MB	A32675	OD1225-12MB	A32590	OD172SAP-12HHB
TA200 DC		M33413	OD8025-24MB	A32680	OD1225-24MB	A32600	OD172SAP-24HHB
C34573	OD5010-12HB	M33414	OD8025-12LB	A32685	OD1225-12LB	A33115	OD172SAP-12MB
C34574	OD5010-24HB	M33415	OD8025-24LB	A32690	OD1225-24LB	A33142	OD172SAP-24MB
TA225 DC		A33245	OD8015-12HB	A34350	OD1225-24HB	A33230	OD172SAP-48HHB
M33394	OD6025-12LB	A33315	OD8015-12HHB	A34362-16	OD127-48HB	A30318	OA172SAPL-11-1TB
M33397	OD6025-24LB	**TA350**		B31256	OD1238-12HB	A30322	OA172SAPL-22-1TB
M33399	OD6025-12LB	M33416	OD9225-12LB	B31257	OD1238-24HB	**TA1000**	
M33401	OD6025-24LB	M33417	OD9225-24LB	B31276	OD1238-12HB	A30436	OA254AN-11-2TB
M33402	OD6025-12LB	A33418	OD9225-12MB	B31277	OD1238-24HB	A30230	OA254AP-22-1TB
M33403	OD6025-24LB	M33419	OD9225-24MB	B31668-16	OD1238-12LB	A30205	OA254AP-11-1TB
M33404	OD6025-12MB	M33420	OD9225-12HB	B31787-16	OD1238-24LB	**GAMMA 28**	
M33405	OD6025-24MB	M33421	OD9225-24HB	B31873	OD1238-12MB	A34124	ODB7530-12HB
M33455	OD6025-12HB	M33422	OD9225-12HHB	B32347-16	OD1238-12LB		
M33497	OD6025-24HB	M33423	OD9225-24HHB	B32832-16	OD1238-12LB		
R33965-33	OD6015-12HB	**TA450**		B32837	OD1238-24MB		
R34150	OD6015-24HB	A28678	OA109AP-22-1	B32861	OD1238-48HB		

ETRI	ORION	ETRI	ORION	ETRI	ORION	ETRI	ORION
98XH-2182-000	OA125-11-1TS	125XR-2281-010	OA109AP-22-1TS	129LG-0282-010	OA109AP-11-2TB	144LV-2282-010	OA109AP-11-3TS
98XH-0182-020	OA125-11-1TB	125XR-0281-010	OA109AP-22-1TB	129LG-2281-090	OA109AP-22-2TS	144LV-0282-010	OA109AP-11-3TB
98XH-2181-000	OA125-22-1TS	125LG-2282-010	OA109AP-11-2TS	129LG-0281-010	OA109AP-22-2TB	144LV-2281-010	OA109AP-22-3TS
98XH-0181-000	OA125-22-1TB	125LG-0282-010	OA109AP-11-2TB	129XL-2282-030	OA109AP-11-3TS	144LV-0281-010	OA109AP-22-3TB
98XC-2182-000	OA125-11-3TS	125LG-2281-090	OA109AP-22-2TS	129XL-0282-010	OA109AP-11-3TB	146DF-2182-004	OA825AP-11-1TS
98XC-0182-000	OA125-11-3TB	125LG-0281-010	OA109AP-22-2TB	129XL-2281-030	OA109AP-22-3TS	146DF-0182-004	OA825AP-11-1TB
98XC-2181-000	OA125-22-3TS	125XL-2282-030	OA109AP-11-3TS	129xl-0281-010	OA109AP-22-3TS	146DF-2181-000	OA825AP-22-1TS
98XC-0181-000	OA125-22-3TB	125XL-0282-010	OA109AP-11-3TB	141LS-2282-010	OA109AP-11-1TS	146DF-0181-000	OA825AP-22-1TB
99XU-2182-000	OA92AP-11-1TS	125XL-2281-030	OA109AP-22-3TS	141LS-0282-010	OA109AP-11-1TB	146DJ-2182-030	OA825AP-11-2TS
99XU-0182-000	OA92AP-11-1TB	125XL-0281-010	OA109AP-22-2TB	141LS-2281-010	OA109AP-22-1TS	146DJ-0182-004	OA825AP-11-2TB
99XU-2181-000	OA92AP-22-1TS	126LF-2182-000	OA80AP-11-1TS	141LS-0281-010	OA109AP-22-1TB	148VK-0282-030	OA172SAPL-11-1TB
99XU-0181-000	OA92AP-22-1TB	126LF-0182-000	OA80AP-11-1TB	141LT-2282-010	OA109AP-11-2TS	148VK-0281-030	OA172SAPL-22-1TB
99XW-2182-000	OA92AP-11-2TS	126LF-2181-000	OA80AP-22-1TS	141LT-00282-010	OA109AP-11-2TB	148VP-0282-030	OA172SAPL-11-1TB
99XWU-0182-000	OA92AP-22-1TB	126LF-0181-000	OA80AP-22-1TB	141LT-2281-010	OA109AP-22-2TS	148VP-0281-030	OA172SAPL-22-1TB
99XW-0182-000	OA92AP-11-2TB	126LJ-2182-000	OA80AP-11-2TS	141LT-00281-010	OA109AP-22-2TB	148VE-0282-030	OA172SAPL-11-1TB
99XW-2181-000	OA92AP-22-2TS	126LJ-0182-000	OA80AP-11-2TB	141LV2282-010	OA109AP-11-3TS	148VE-0281-030	OA172SAPL-22-1TB
99XW-0181-000	OA92AP-22-2TB	126LJ-2181-000	OA80AP-22-2TS	141LV-0282-010	OA109AP-11-3TB	154DA-0282-030	OA172SAPL-11-1TB
99XM-2182-000	OA92AP-11-1TS	126LJ-0181-000	OA80AP-22-2TB	141LV-2281-010	OA109AP-22-3TS	154DA-0281-030	OA172SAPL-22-1TB
99XM-0182-000	OA92AP-11-1TB	126LH-2182-000	OA80AP-11-3TS	141LV0281-010	OA109AP-22-3TB	154DE-0282-030	OA172SAPL-11-1TB
99XM-2181-000	OA92AP-22-1TS	126LH-0182-000	OA80AP-11-3TB	144LS-2282-010	OA109AP-11-1TS	154DE-0281-030	OA172SAPL-22-1TB
99XM-0181-000	OA92AP-22-1TB	126LH-2181-000	OA80AP-22-3TS	144LS0282-010	OA109AP-11-1TB	154DG-0282-030	OA172SAPL-11-1TB
113XN-2182-000	OA938AP-11-1TS	126LH-0181-000	OA80AP-22-3TB	144LS-2281-010	OA109AP-22-1TS	154DG-0281-030	OA172SAPL-22-1TB
113XN-0182-000	OA938AP-11-1TB	129XR-2282-010	OA109AP-11-1TS	144LS-0281-010	OA109AP-22-1TB	235D3-1LP11-000	OD1238-12HB
113XN-2181-000	OA938AP-22-1TS	129XR-0282-010	OA109AP-11-1TB	144LT-2282-010	OA109AP-11-2TS	337D3-9LP11-00	OD127-48
113XN-0181-000	OA938AP-22-1TB	129XR-2281-010	OA109AP-22-1TS	144LT-0282-010	OA109AP-11-2TB		
125XR-2282-010	OA109AP-11-1TS	129XR-0281-010	OA109AP-22-1TB	144LT-2281-010	OA109AP-22-2TS		
125XR-0282-010	OA109AP-11-1TB	129LG-2282-010	OA109AP-11-2TS	144LT-0281-010	OA109AP-22-2TB		

ADDA	ORION	ADDA	ORION	ADDA	ORION	ADDA	ORION
AD1212HB-A71GL	OD1225-12HB	AD1224HB-F53	OD1238-24HB0120	AD0612HB-D70GL	OD6015-12HB	AD0812HB-A73GL	OD8025-12HB01A
AD1212HB-A73GL	OD1225-12HB01A	AD1224LB-F51	OD1238-24LB	AD0612LB-D70GL	OD6015-12LB	AD0812LB-A70GL	OD8025-12LB
AD1212LB-A71GL	OD1225-12LB	AD1224MB-F51	OD1238-24MB	AD0612MB-D70GL	OD6015-12MB	AD0812MB-A70GL	OD8025-12MB
AD1212MB-A71GL	OD1225-12MB	AD1248HB-F53	OD1238-48HB01A	AD0624HB-D70GL	OD6015-24HB	AD0824HB-A70GL	OD8025-24HB
AD1224HB-A71GL	OD1225-24HB	AD0212HB-G50GL	OD2510-12HB	AD0624LB-D70GL	OD6015-24LB	AD0824HB-A73GL	OD8025-24HB0120
AD1224HB-A73GL	OD1225-24HB01A	AD0212HB-G53	OD2510-12HB01A	AD0624MB-D70GL	OD6015-24MB	AD0824HB-A73GL	OD8025-24HB01A
AD1224LB-A71GL	OD1225-24LB	AD0312HB-G50	OD3010-12HB	AD0612HB-A70GL	OD6025-12HB	AD0824LB-A70GL	OD8025-24LB
AD1224MB-A71GL	OD1225-24MB	AD0312MB-G50	OD3010-12MB	AD0612LB-A70GL	OD6025-12LB	AD0824MB-A70GL	OD8025-24MB
AD1212MB-Y51	OD1232-12HB	AD0405HB-G70	OD4010-05HB	AD0612MB-A70GL	OD6025-12MB	AD0812HB-Y53	OD8032-12HB0120
AD1212MB-Y51	OD1232-12HB04	AD0412HB-G70	OD4010-12HB	AD0624HB-A70GL	OD6025-24HB	AD0824HB-Y51	OD8032-24HB
AD1212MB-Y51	OD1232-12MB	AD0412HB-G73	OD4010-12HB01A	AD0624HB-A70GL	OD6025-24HB01A	AD0912HB-A70GL	OD9225-12HB
AD1224HB-Y51	OD1232-24HB	AD0424HB-G76	OD4010-24HB01A	AD0624LB-A70GL	OD6025-24LB	AD0912HB-A71GL	OD9225-12HB01A
AD1224HB-Y51	OD1232-24HB04	AD0412HB-C50	OD4020-12HB	AD0624MB-A70GL	OD6025-24MB	AD0912LB-A70GL	OD9225-12LB
AD1212HB-F51	OD1238-12HB	AD0412HB-C53	OD4020-12HB01A	AD0812HB-D70	OD8015-12HB	AD0912MB-A70GL	OD9225-12MB
AD1212HB-F53	OD1238-12HB0120	AD0412LB-C50	OD4020-12LB	AD0812LB-D71	OD8015-12LB	AD0924HB-A70GL	OD9225-24HB
AD1212HB-F51	OD1238-12HB01A	AD0412MB-C50	OD4020-12MB	AD0812MB-D70	OD8015-12MB	AD0924HB-A76GL	OD9225-24HB01A
AD1212LB-F50	OD1238-12LB	AD0424HB-C50	OD4020-24HB	AD0824HB-D70	OD8015-24HB	AD0924LB-A70GL	OD9225-24LB
AD1212MB-F51	OD1238-12MB	AD0424LB-C50	OD4020-24LB	AD0824HB-D70	OD8015-24LB	AD0924MB-A70GL	OD9225-24MB
AD1224HB-F51	OD1238-24HB	AD0424MB-C50	OD4020-24MB	AD0824MB-D71	OD8015-24MB		
AD1224HB-F53	OD1238-24HB01	AD0412HB-B33	OD4028-12HB01A	AD0812HB-A70GL	OD8025-12HB	AD7512HX-LF	ODB7530-12HB
AD1212HS-F51	OD1238-12HS	AD0412LX-G70	OD4010-12LB	AD0512HB-G70	OD5010-12HB		
AD0812HX-A70	OD8025-12HB	AD0412HX-G71	OD4010-12HB	AD0512LX-G70	OD5010-12LB		
AD0824US-A71	OD8025-24HHB	AD0412MX-G70	OD4010-12MB	AD0612UB-A70	OD6025-12HHB		
AD0824UB-Y53	OD8032-24HHB0120	AD0412UB-C50	OD4020-12HHB	AD0612HX-A71	OD6025-12HB		
		AD0624UB-A71	OD6025-24HHB	AD0612MB-A72	OD6025-12MB02		

SUNON	ORION	SUNON	ORION	SUNON	ORION	SUNON	ORION
A1123-HBL	OA109AP-11-1WB	GM1202PFV2-8	OD2510-12MB	KD2409PTS2	OD9225-24MS	KDE4812PMV1	OD1238-48HHB
A1123-HBT	OA109AP-11-1TB	GM1203PFV1-8	OD3010-12HB	KD2409PTS3	OD9225-24LS	KDE4812PMV2	OD1238-48HB
A1123-HBT	OA4715-12TB	GM1203PFV2-8	OD3010-12MB	KD2412PMB1	OD1238-24HHB	KDE4812PMV3	OD1238-48MB
A1123-HSL	OA109AP-11-1WS	GM1204PQV1	OD4028-12HB	KD2412PMB2	OD1238-24HB	MA1062-HVL	OA60AP-11-1WB
A1123-HST	OA109AP-11-1TS	KD0504PFS1	OD4010-05HS	KD2412PMB3	OD1238-24MB	MA2062-HVL	OA60AP-22-1WB
A1172-HBTTC.R	OA172AP-11-1TB	KD0504PFS2	OD4010-05MS	KD2412PMBX-6A	OD1238-24HHB	**MC35101V1-000U-A99**	**OD3510-12HSS**
A1175-HBLT	OA172SAP-11-1WB	KD0504PKB1	OD4020-05HB	KD2412PTB1-6A	OD1225-24HB	**MB45101V2-000U-A99**	**OD4510-12HSS**
A1175-HBLTC.R	OA172AP-11-1WB	KD0504PKB2	OD4020-05MB	KD2412PTB2-6A	OD1225-24MB	**MB50151V2-000U-A99**	**OD5015-12MSS**
A1175-HBTT	OA172SAP-11-1TB	KD0504PKB3	OD4020-05LB	KD2412PTB3-6A	OD1225-24LB	PMD1204PQB1-A	OD4028-12HHB
A1179-HBL	OA180AP-11-1WB	KD0504PKS1	OD4020-05HS	KD2412PTBX-6A	OD1225-24HHB	**PMD2407PTB1-A.(2).GN**	**OD7025-24HHB**
A1179-HBT	OA180AP-11-1TB	KD0504PKS2	OD4020-5MS	KDE0502PFB2-8	OD2510-05MB	SF11580A1083HBL	OA80AP-11-1WB
A1259-HBL	OA254AN-11-1WB	KD0504PKS3	OD4020-05LS	KDE0504PFV1	OD4010-05HB	SF11580A1083HSL	OA80AP-11-1WS
A1259-HBT	OA254AN-11-1TB	KD0505PFS1	OD5010-05HS	KDE0504PFV2	OD4010-05MB	SF11580AT1082HBL	OA825AP-11-1WB
A1259-MBL	OA254AN-11-2WB	KD0505PKS2	OD5010-05MS	KDE0504PKV1	OD4020-05HB	SF11580AT1082HSL	OA825AP-11-1WS
A1259-MBL	OA254AP-11-1WB	KD1204PFB3	OD4010-12MB	KDE0504PKV2	OD4020-05MB	SF11592A1092HBL	OA92AP-11-1WB
A1259-MBT	OA254AN-11-2TB	KD1204PFS1	OD4010-12HS	KDE0504PKV3	OD4020-05LB	SF11592A1092HBT	OA92AP-11-1TB
A1259-MBT	OA254AP-11-1TB	KD1204PFS2	OD4010-12MB	KDE0505PFV1	OD5010-05HB	SF11592A1092HSL	OA92AP-11-1WS
A2123-HBL	OA109AP-22-1WB	KD1204PKB1	OD4020-12HB	KDE0505PFV2	OD5010-05MB	SF11592A1092HST	OA92AP-11-1TS
A2123-HBT	OA109AP-22-1TB	KD1204PKB2	OD4020-12MB	KDE1202PFV2-8	OD2510-12MB	SF11592A1092MBL	OA92AP-11-2WB
A2123-HBT	OA4715-23TB	KD1204PKB3	OD4020-12LB	KDE1204PFV1	OD4010-12HB	SF11592A1092MBT	OA92AP-11-2TB
A2123-HSL	OA109AP-22-1WS	KD1204PKBX	OD4020-12HHB	KDE1204PFV2	OD4010-12MB	SF11592A1092MSL	OA92AP-11-2WS
A2123-HST	OA109AP-22-1TS	KD1204PKS1	OD4020-12HS	KDE1204PKB4	OD4020-12HHB	SF11592A1092MST	OA92AP-11-2TS
A2175-HBLT	OA172SAP-22-1WB	KD1204PKS2	OD4020-12MS	KDE1204PKBX	OD4020-12HHB	SF1212ADBL	OA109AP-11/22-1WB
A2175-HBLTC.R	OA172AP-22-1WB	KD1204PKS3	OD4020-12LS	KDE1204PKV1	OD4020-12HB	SF1212ADSL	OA109AP-11/22-1WS
A2175-HBTT	OA172SAP-22-1TB	KD1204PKSX	OD4020-12HHS	KDE1204PKV2	OD4020-12MB	SF223092A2092MSL	OA92AP-22-2WS
A2175-HBTTC.R	OA172AP-22-1TB	KD1205PFS1	OD5010-12HS	KDE1204PKV3	OD4020-12LB	SF23080A2083HBL	OA80AP-22-1WB
A2179-HBL	OA180AP-22-1WB	KD1205PFS2	OD5010-12MS	KDE1204PKVX	OD4020-12HHB	SF23080A2083HSL	OA80AP-22-1WS
A2179-HBT	OA180AP-22-1TB	KD1206PFS1	OD6010-12HS	KDE1205PFV1	OD5010-12HB	SF23080AT2082HSL	OA825AP-22-1WS
A2259-HBL	OA254AN-22-1WB	KD1206PFS2	OD6010-12MS	KDE1205PFV2	OD5010-12MB	SF2308AT2082HBL	OA825AP-22-1WB
A2259-HBT	OA254AN-22-1TB	KD1206PFS3	OD6010-12LS	KDE1206PFB2	OD6010-12HB	SF23092A2092HBL	OA92AP-22-1WB
A2259-MBL	OA254AN-22-2WB	KD1206PHS1	OD6015-12HS	KDE1206PFV1	OD6010-12HB	SF23092A2092HBT	OA92AP-22-1TB
A2259-MBL	OA254AP-11-1WB	KD1206PHS2	OD6015-12MS	KDE1206PFV2	OD6010-12MB	SF23092A2092HSL	OA92AP-22-1WS
A2259-MBT	OA254AN-22-2TB	KD1206PHS3	OD6015-12LS	KDE1206PFV3	OD6010-12LB	SF23092A2092HST	OA92AP-22-1TS
A2259-MBT	OA254AP-11-1TB	KD1206PKB1	OD6020-12HB	KDE1206PHV1	OD6015-12HB	SF23092A2092MBL	OA92AP-22-2WB
DP102A1123MBT	OA109AP-11-2TB	KD1206PKB2	OD6020-12MB	KDE1206PHV2	OD6015-12MB	SF23092A2092MBT	OA92AP-22-2TB
DP2000A2123XST	OA109AP-22-1TS	KD1206PKS1	OD6020-12HS	KDE1206PHV3	OD6015-12LB	SF23092A2092MST	OA92AP-22-2TS
DP200A2123XBL	OA109AP-22-1WB	KD1206PKS2	OD6020-12MS	KDE1206PKV1	OD6020-12HB	SP100A1123XBL	OA109AP-11-1WB
DP200A2123XBT	OA109AP-22-1TB	KD1206PTB1	OD6025-12HB	KDE1206PKV2	OD6020-12MB	SP100A1123XBT	OA109AP-11-1TB
DP200A2123XBT	OA4715-23TB	KD1206PTB2	OD6025-12MB	KDE1206PKVX	OD6020-12HHB	SP100A1123XBT	OA4715-12TB
DP200A2123XSL	OA109AP-22-1WS	KD1206PTS1	OD6025-12HS	KDE1206PTV1	OD6025-12HB	SP100A1123XSL	OA109AP-11-1WS
DP201A1122LST	OA175AP-11-3TS	KD1206PTS2	OD6025-12MS	KDE1206PTV2	OD6025-12MB	SP100A1123XST	OA109AP-11-1TS
DP201A2123HBL	OA109AP-22-1WB	KD1208PHB2	OD8015-12HB	KDE1206PTVX	OD6025-12HHB	SP101A1123HBL	OA109AP-11-1WB
DP201A2123HBT	OA109AP-22-1TB	KD1208PHB3	OD8015-12MB	KDE1208PHV3	OD8015-12MB	SP101A1123HBT	OA109AP-11-1TB
DP201A2123HBT	OA4715-23TB	KD1208PTB1	OD8025-12HHB	KDE1208PTV1	OD8025-12HHB	SP101A1123HBT	OA4715-12TB
DP201A2123HST	OS109SP-22-1TS	KD1208PTB2	OD8025-12HB	KDE1208PTV2	OD8025-12HB	SP101A1123HSL	OA109AP-11-1WS
DP201A2133HSL	OA109AP-22-1WS	KD1208PTB3	OD8025-12MB	KDE1208PTV2	OD8025-24HB	SP101A1123HST	OA109AP-11-1TS
DP201AT2122HBL	OA125AP-22-1WB	KD1208PTS2	OD8025-12HS	KDE1208PTV3	OD8025-12MB	SP101AT1122HBL	OA125AP-11-1WB
DP201AT2122HBT	OA125AP-22-1TB	KD1208PTS3	OD8025-12MS	KDE1209PTV1	OD9225-12HB	SP101AT1122HBT	OA125AP-11-1TB
DP201AT2122HSL	OA125AP-22-1WS	KD1209PTB1	OD9225-12HB	KDE1209PTV2	OD9225-12MB	SP101AT1122HSL	OA125AP-11-1WS
DP201AT2122HST	OA125AP-22-1TS	KD1209PTB2	OD9225-12MB	KDE1209PTV3	OD9225-12LB	SP101AT1122HST	OA125AP-11-1TS
DP202A2123MBL	OA109AP-22-2WB	KD1209PTB3	OD9225-12LB	KDE1212PMV1	OD1238-12HHB	SP102A1123MBL	OA109AP-11-2WB
DP202A2123MBT	OA109AP-22-2TB	KD1209PTS1	OD9225-12HS	KDE1212PMV2	OD1238-12HB	SP102A1123MSL	OA109AP-11-2WS
DP202A2123MSL	OA109AP-22-2WS	KD1209PTS2	OD9225-12MS	KDE1212PMV3	OD1238-12MB	SP102A1123MST	OA109AP-AA-2TS
DP202A2123MST	OA109AP-22-2TS	KD1209PTS3	OD9225-12LS	KDE1212PTB1-6A	OD1225-12HB	SP103A1123LBL	OA109SP-11-3WB
DP203A2123LBL	OA109AP-22-3WB	KD1212PMB1	OD1238-12HHB	KDE2404PKV1	OD4020-24HB	SP103A1123LBT	OA109AP-11-3TB
DP203A2123LBT	OA109AP-22-3TB	KD1212PMB2	OD1238-12HB	KDE2404PKV2	OD4020-24MB	SP103A1123LSL	OA109AP-11-3WS
DP203A2123LSL	OA109AP-22-3WS	KD1212PMB3	OD1238-12MB	KDE2404PKVX	OD4020-24HHB	SP103A1123LST	OA109AP-11-3TS
DP203A2123LST	OA109AP-22-3TS	KD1212PMB4-6A	OD1238-12LB	KDE2405PTV1	OD9225-24HB	SP103AT1122LBL	OA125AP-11-3WB
DP203AT2122LBL	OA125AP-22-3WB	KD1212PMBX-6A	OD1238-12HHB	KDE2406PKV1	OD6020-24HB	SP103AT1122LBT	OA125AP-11-3TB
DP203AT2122LBT	OA125AP-22-3TB	KD1212PTB2-6A	OD1225-12MB	KDE2406PKV2	OD6020-24MB	SP103AT1122LSL	OA125AP-11-3WS
DP203AT2122LSL	OA125AP-22-3WS	KD1212PTB3-6A	OD1225-12LB	KDE2406PKVX	OD6020-24HHB	SP103AT1122LST	OA125AP-11-3TS
DP203AT2122LST	OA125AP-22-3TS	KD2406PTB1	OD6025-24HB	KDE2406PTV1	OD6025-24HB	SP109WR1123HBL	OA109AP-11-1WB
DP209WR-2123HBL	OA109AP-22-1WB	KD2408PHB2	OD8015-24HB	KDE2406PTV2	OD6025-24MB	SP109WR1123HBT	OA109AP-11-1TB
DP209WR2123HBT	OA109AP-22-1TB	KD2408PHB3	OD8015-24MB	KDE2406PTVX	OD6025-24HHB	SP109WR1123HBT	OA4715-12TB
DP209WR2123HBT	OA4715-23TB	KD2408PTB1	OD8025-24HHB	KDE2408PTS2	OD8025-24HS	SP109WR1123HSL	OA109AP-11-1WS
DP209WR2123HSL	OA109AP-22-1WS	KD2408PTB2	OD8025-24HB	KDE2408PTV1	OD8025-24HHB	SP109WR1123HST	OA109AP-11-1TS
DP209WR2123HST	OA109AP-22-1TS	KD2408PTB3	OD8025-24MB	KDE2408PTV3	OD8025-24MB		
GM0502PFV1-8	OD2510-05HB	KD2408PTS3	OD8025-24MS	KDE2409PTV2	OD9225-24MB	PMB1275PNB3-AY	ODB7530-12HB
GM0502PFV2-8	OD2510-05MB	KD2409PTB1	OD9225-24HB	KDE2409PTV3	OD9225-24LB	PMB1297PYB2-AY	ODB9733-12HB
GM0503PFV1-8	OD3010-05HB	KD2409PTB2	OD9225-24MB	KDE2412PMV1	OD1238-24HHB	PMB2475PNB3-AY	ODB7530-24HB
GM0504PEV1-8.GN	**OD4006-05HSS**	KD2409PTB3	OD9225-24LB	KDE2412PMV2	OD1238-24HB	PMB2497PYB2-AY	ODB9733-24HB
GM1202PFV1-8	OD2510-12HB	KD2409PTS1	OD9225-24HS	KDE2412PMV3	OD1238-24MB	PMB4897PYB2-AY	ODB9733-48HB

OEM Price List *

AC Fans

Series No.	VAC	Ball	Sleeve
OA60	115, 230	$16.00	$14.50
OA825	115, 230	$16.00	$14.50
OA80	115, 230	$14.50	$13.00
OA92	115, 230	$16.00	$14.50
OA938	115, 230	$16.00	$14.50
OA125	115, 230	$16.00	$14.50
OA109 Standard	115, 230	$15.50	$14.00
OA109 XC	115, 230	$21.75	N/A
O4715 Challenger	115, 230	$12.50	N/A
OA109 (AIOS)	115, 230	$15.50	$14.00
OA109 Smart Fan	115, 230	$21.00	N/A
OA119	115, 230	$26.50	$22.00
OA162	115, 230	$40.00	N/A
OA5920 Challenger	115, 230	$31.50	N/A
OA172	115, 230	$41.00	N/A
OA172 XC	115, 230	$45.50	N/A
OA172SAPL	115, 230	$40.50	N/A
OA180	115, 230	$75.50	N/A
OA180APL	115, 230	$75.50	N/A
OA200EC	115, 230	$135.00	N/A
OA225	115, 230	$110.00	N/A
OA254AP	115, 230	$66.00	N/A
OA254AN	115, 230	$73.50	N/A
OA254AN XC	115, 230	$77.00	N/A
OA280	115, 230	$150.00	N/A

AC Fans - All Metal/Industrial

Part No.	VAC	Ball
OA80AP all metal	115, 230	$24.25
OA938AP all metal	115, 230	$25.25
OA109AP all metal	115, 230	$25.50
OA119AP all metal	115, 230	$31.25
OA172SAP all metal	115, 230	$46.75
OA172AP all metal	115, 230	$48.25
OA162AP all metal	115, 230	$48.25
OA180APL all metal	115, 230	$82.95
OA180AN all metal	115, 230	$84.10
OA200AN all metal	115, 230	$92.75
OA205AN all metal	115, 230	$97.35
OA225 all metal	115, 230	$135.00
OA280 all metal	115, 230	$150.00
OA2543AN all metal	115, 230	$109.75
OA2547AN all metal	115, 230	$112.00

AC Fans - IP55 Rated

Series No.	VAC	Ball
OA109AP	115, 230	$20.60
OA172SAPL	115, 230	$43.50
OA172SAP	115, 230	$44.17

AC Fans - Salt-Fog

Series No.	VAC	Ball
OA109AP	115, 230	$36.00
OA172SAP	115, 230	$61.00
OA172SAP (XC)	115, 230	$70.00
OA254AP	115, 230	$84.75

AC Fans Dual Voltage 115/230 VAC

Series No.	VAC	Ball	Sleeve
OA825	115 / 230 Dual	$21.00	$18.00
OA80	115 / 230 Dual	$21.00	$18.00
OA92	115 / 230 Dual	$21.00	$18.00
OA938	115 / 230 Dual	$21.00	$18.00
OA125	115 / 230 Dual	$21.00	$18.00
OA109	115 / 230 Dual	$21.00	$18.00
OA119	115 / 230 Dual	$31.00	$27.50

Louvered Filter Fan Kits

(Includes AC Fan, Filter, Louvered Guard, Metal Guard & Hardware)

Series No.	Price
OA109LFG	$34.50
OA172LFG	$60.50
OA172LFG XC	$61.50
OA225LFG	$180.00
OA254LFG	$110.00
OA254LFG XC	$106.00
OA280LFG	$220.00

Spot Coolers

Model No.	Voltage Input	Ball
OD9225-SPOT	115	$32.00
OD1232-SPOT	115	$36.00
OD1232-SPOT/DIN	115	$44.00

* Pricing indicated is for OEM's and is for 100 pcs. For larger quantity pricing please check with one of our franchised distributors or with our customer service. Check our website to locate a distributor in your area.

Knight Electronics, Inc.
10557 Metric Drive
Dallas, Texas 75243
214-340-0265

Information and data is subject to change without prior notification.

DC Fans **

Series No.	VDC	Ball	Sleeve
OD2510	5, 12	$13.50	N/A
OD3010	5, 12	$9.00	CALL
OD3510	5, 12	$9.00	CALL
OD4010	5, 12, 24	$9.00	CALL
OD4010 SS	12, 24	N/A	$4.65
OD4015	5, 12, 24	$9.00	CALL
OD4020	5, 12, 24	$9.00	CALL
OD4020 SS	12, 24	N/A	$4.65
OD4028	5, 12, 24	$10.00	CALL
OD4028 XC	12	$13.00	N/A
OD5010	5, 12, 24	$9.00	CALL
OD5015	12, 24	$15.00	CALL
OD5210	5, 12, 24	$9.00	CALL
OD6010	5, 12, 24	$9.00	CALL
OD6015	5, 12, 24	$9.00	CALL
OD6020	5, 12, 24	$9.00	CALL
OD6025	5, 12, 24	$9.00	CALL
OD6025	48	$12.00	CALL
OD6025-60LB	60	$12.50	N/A
OD6025 SS	12, 24	N/A	$4.65
OD6025 IP55	12	$12.00	N/A
OD7015	12	$9.00	N/A
OD7020	12	$9.00	N/A
OD7025	12, 24	$9.00	N/A
OD7025 XC	12	$10.00	N/A
OD8015	5, 12, 24	$9.00	CALL
OD8025	5, 12, 24	$9.00	CALL
OD8025	48	$12.00	CALL
OD8025 SS	12, 24	N/A	$4.65
OD8025 IP55	12	$12.00	N/A
OD8032	12, 24	$12.00	CALL
OD8032	48	$14.00	CALL
OD8038	12, 24, 48	$16.00	N/A
OD9220	12, 24	$10.00	CALL
OD9225	12, 24	$10.00	CALL
OD9225	48	$12.00	CALL
OD9225-60HB	60	$13.50	N/A
OD9225 SS	12, 24	N/A	$4.65
OD9225 IP55	12	$13.00	N/A
OD9238	12, 24	$15.00	CALL
OD1225	12, 24	$15.50	CALL
OD1225	48	$19.00	CALL
OD1225 SS	12, 24	N/A	$10.00
OD1232	12, 24	$15.00	CALL
OD1232	48	$20.00	CALL
OD1238	12, 24	$17.50	CALL
OD1238	48	$21.00	CALL
OD1238-60HB	60	$24.00	N/A

DC Fans **

Series No.	VDC	Ball	Sleeve
OD1238 SS	12, 24	N/A	$11.00
OD1238AP(Metal)	12, 24	$19.50	N/A
OD1238 XC	12, 24	$21.00	N/A
OD1238 XC	48	$23.00	N/A
OD1238 HTB	12, 24	$18.50	N/A
OD1238 HTB	48	$24.50	N/A
OD127	12, 24	$25.00	N/A
OD127	48	$27.00	N/A
OD127AP(Metal)	12, 24	$31.00	N/A
OD127AP(Metal)	48	$34.00	N/A
OD172SAPL	12, 24	$72.00	N/A
OD172SAPL	48	$74.00	N/A
OD172	12, 24	$78.50	N/A
OD172	48	$80.00	N/A
OD180	12, 24, 48	$110.00	N/A
OD254	12, 24	$120.00	N/A
OD254	48	$125.00	N/A
OD280	12, 24	$285.00	N/A
OD280	48	$295.00	N/A

High Static Pressure Fans

Series No.	VDC	Ball
OD6038 VXC	12, 24	$17.00
OD8038 VXC	12, 24, 48	$17.00
OD9238 VXC	12, 24, 48	$17.00
OD1238 VXC	12, 24, 48	$30.00
OD6038-12HBXC01A	12	$16.50
OD6038-12HBXC10A	12	$17.00
OD6038-12HHBXC01A	12	$16.50
OD6038-12HHBXC10A	12	$17.00
OD6038-12LBXC01A	12	$16.50
OD6038-24HHBXC10A	24	$17.00
OD8038-12HBXE10A	12	$20.00
OD8038-48HBXE10A	48	$20.00
OD9238-12HHBXC10A	12	$22.50
OD1238-12HBXJ01A	12	$26.50
OD1238-12HBXJ10A	12	$26.50
OD1238-12MBXJ01A	12	$26.50
OD1238-12MBXJ10A	12	$26.50
OD1238-24HBXJ01A	24	$26.50

DC Blowers

Series No.	VDC	Ball	Sleeve
ODB5009	12, 24	$22.00	N/A
ODB5115	12	$10.50	N/A
ODB6015	12	$10.00	N/A
ODB7530	12, 24	$18.50	N/A
ODB9733	12, 24	$18.50	N/A
ODB9733	48	$20.50	N/A
ODB600	12, 24	$23.50	$19.50
ODB600	48	$27.00	$23.00
ODB1232	12, 24, 48	$20.00	N/A

AC & DC FAN TRAYS and AC BLOWERS

AC Fan Trays

Model No.	Part No.	Vac	Price
OMB5200-120	FTA-520A211(HF)	120VAC	$405.00
OMB5200-230	FTA-520A222(HF)	230VAC	$405.00
OA300S (short)	FTA-03115-014(BK)	115VAC	$175.00
OA600S (short)	FTA-06115-014(BK)	115VAC	$275.00
OA300ST-120	FTA-018C311(HF)	120VAC	$125.00
OA300ST-12003	FTA-018C311HF(03)	120VAC	$150.00
OA300ST-12004	FTA-018C311HF(04)	120VAC	$175.00
OA600ST-120	FTA-018C611(HF)	120VAC	$240.00
OA300	FTA-03115-018(BK)	115VAC	$175.00
OA406		115VAC	$285.00
OA406-IEC		115VAC	$285.00
OA406-DUAL		115/230	$327.00
OA406-IEC-DUAL		115/230	$327.00
OA406-PS		Power Supply	$42.00
OA406-IEC-PS		Power Supply	$42.00
OA600	FTA-06115-018(BK)	115VAC	$275.00
OA900	FTA-09115-018(BK)	115VAC	$375.00
OA302S (short)	FTA-03220-014(BK)	230VAC	$175.00
OA602S (short)	FTA-06220-014(BK)	230VAC	$275.00
OA300ST-230	FTA-018C322(HF)	230VAC	$125.00
OA300ST-23003	FTA-018C322HF(03)	230VAC	$150.00
OA300ST-23004	FTA-018C322HF(04)	230VAC	$175.00
OA600ST-230	FTA-018C622(HF)	230VAC	$240.00
OA302	FTA-03220-018(BK)	230VAC	$175.00
OA602	FTA-06220-018(BK)	230VAC	$275.00
OA902	FTA-09220-018(BK)	230VAC	$375.00
OA300S-DV (short)	FTA-03DV-014(BK)	115/230	$215.00
OA600S-DV (short)	FTA-06DV-014(BK)	115/230	$345.00
OA300-DV	FTA-03DV-018(BK)	115/230	$215.00
OA600-DV	FTA-06DV-018(BK)	115/230	$345.00
OA900-DV	FTA-09DV-018(BK)	115/230	$465.00

AC Crossaxial Blowers

Series No.	VAC	Ball
OAB30098	115, 230	$34.00
OAB30160	115, 230	$37.50
OAB30198	115, 230	$39.50
OAB30300	115, 230	$40.50
OAB40098	115, 230	$36.00
OAB40160	115, 230	$40.00
OAB40198	115, 230	$41.50
OAB40300	115, 230	$42.50
OAB50098	115, 230	$38.50
OAB50198	115, 230	$44.50
OAB50298	115, 230	$48.00
OAB50358	115, 230	$51.00
OAB60184	115, 230	$53.00
OAB60245	115, 230	$55.00
OAB60306	115, 230	$57.00
OAB60368	115, 230	$58.50
OAB60429	115, 230	$60.00

AC Blowers / Motorized Impellers

Series No.	VAC	Ball	Sleeve
OAB190	115, 230	$87.50	N/A
OAB220	115, 230	$91.50	N/A
OAB22599	115, 230	$100.00	N/A
OAB250	115, 230	$97.00	N/A
OAB318	115, 230	$160.00	N/A
OAB360	115, 230	$225.00	N/A
OAB400	230	$280.00	N/A
OAB800	115, 230	$27.00	$24.50
OAB908	115, 230	$86.00	N/A
Duct Ring for DR190A	N/A	$7.00	N/A
Duct Ring for DR220A	N/A	$9.00	N/A
Duct Ring for DR22599	N/A	$11.00	N/A
Duct Ring for DR250A	N/A	$12.50	N/A
Duct Ring for DR318A	N/A	$14.00	N/A
Duct Ring for DR360A	N/A	$14.25	N/A
Duct Ring for DR400A	N/A	$15.25	N/A

** Add $3.00 to the OEM price each for special function DC fans: tachometer, thermal control, alarm and PWM

* Pricing indicated is for OEM's and is for 100 pcs. For larger quantity pricing please check with one of our franchised distributors or with our customer service. Check our website to locate a distributor in your area.

OEM Price List

DC Fan Trays

Model No.	Part No.	VDC	Price
OD300S-12 (short)	FTD-03012-014(BK)	12VDC	$200.00
OD600S-12 (short)	FTD-06012-014(BK)	12VDC	$300.00
OD300-12	FTD-03012-018(BK)	12VDC	$200.00
OD600-12	FTD-06012-018(BK)	12VDC	$300.00
OD900-12	FTD-09012-018(BK)	12VDC	$375.00
OD300S-24 (short)	FTD-03024-014(BK)	24VDC	$200.00
OD600S-24 (short)	FTD-06024-014(BK)	24VDC	$300.00
OD300-24	FTD-03024-018(BK)	24VDC	$375.00
OD600-24	FTD-06024-018(BK)	24VDC	$300.00
OD900-24	FTD-09024-018(BK)	24VDC	$375.00
OD300S-48 (short)	FTD-03048-014(BK)	48VDC	$220.00
OD600S-48 (short)	FTD-06048-014(BK)	48VDC	$330.00
OD300-48	FTD-03048-018(BK)	48VDC	$220.00
OD600-48	FTD-06048-018(BK)	48VDC	$330.00
OD900-48	FTD-09048-018(BK)	48VDC	$435.00

FAN ACCESSORIES

Wire Finger Guards

Part No.	Price	Part No.	Price
G25-2	$0.90	G119-8	$1.45
G40-2	$1.00	G119-18B	$1.75
G50-3	$1.10	G172-10HA	$2.20
G60-4	$1.10	G172-10H	$2.20
G80-18	$1.20	G172-10LN	$2.50
G80-18B	$1.50	G180-11	$3.50
G92-16	$1.20	G180-MG18	$3.50
G109-15A	$1.20	G254-10P	$3.50
G109-15AB	$1.50	G225	$4.80
G109-3	$1.30	G280	$5.70

Wire Mesh Guards

Part No.	Price	Part No.	Price
WMG60M	$3.25	WMG120M	$4.25
WMG60B	$4.25	WMG120B	$5.25
WMG80M	$3.50	WMG127M	$5.35
WMG80B	$4.50	WMG172M	$5.50
WMG92M	$3.75	WMG172B	$6.50
WMG92B	$4.75		

Plastic Guards

Part No.	Price	Part No.	Price
G40P	$0.60	G92P	$1.00
G60P	$0.75	G120P	$1.20
G80P	$0.90	G172P	$1.50

2-Conductor Fan Cords

Part No.	Price	Part No.	Price
C45-12	$1.50	C90-12	$1.50
C45-24	$1.75	C90-24	$1.75
C45-24P	$2.55	C90-36	$2.00
C45-36	$2.00	C90-48	$2.25
C45-48	$2.25	C90-72	$2.75
C45-48P	$3.05	C180T-12	$1.50
C45-72	$2.75	C180T-24	$1.75
C45-72P	$3.55	C180T-36	$2.00
C45-144	$4.15	C180T-48	$2.25
C45-144P	$4.95	C180T-72	$2.75
C180-12	$1.50	C45-2DC	$2.75
C180-24	$1.75	C45-3DC	$3.75
C180-36	$2.00	C45-4DC	$4.75
C180-48	$2.25	C45-6DC	$5.75
C180-72	$2.75	C45-9DC	$9.75

Filter Kits

Part No.	Price	Part No.	Price
GRM40-XX	$1.30	GRM92-XX	$2.00
GRM60-XX	$1.50	GRM120-XX	$2.35
GRM80-XX	$1.70	GRM172-45	$2.85

Louvered Fan Guards

Part No.	Price	Filter Media Replacements (5/pk)	Price
LFG80	$4.50	N/A	N/A
LFG92	$4.50	N/A	N/A
LFG120B	$5.75	LFG120BF/PK	$4.25
LFG172B	$7.00	LFG172BF/PK	$5.50
LFG225B	$32.17	LFG280BF/PK	$11.13
LFG254B	$15.75	LFG254BF/PK	$9.23
LFG280B	$38.25	LFG280BF/PK	$11.13

Smart Switched PDUs

Part No.	Price
OSP-V-20-11-16-N1	$650.00
OSP-V-16-23-16-N1	$582.50
OSP-H-16-23-08-N1	$432.50
OSP-H-15-11-08-N1	$330.00

Thermal Control Unit

Part No.	Price
TCAC001	$119.00

* Pricing indicated is for OEM's and is for 100 pcs. For larger quantity pricing please check with one of our franchised distributors or with our customerservice. Check our website to locate a distributor in your area. Price in U.S. Dollars and subject to change without notice.

AC Fan Speed Control Unit

Part No.	Price
OA11/22CB	$99.00

Cage Nuts

Part No.	Price
OCN-1032	$0.25
OCN-1032PK (packs of 25)	$5.42
OCN-1032RH	$0.27
OCN-1032RHPK	$5.42
OCN-1032RHHDWPK	$3.50
OCN-1032SCW	$0.10
OCN-1032SCWPK	$2.08
OCN-1224	$0.25
OCN-1224PK	$5.42
OCN-1224SCW	$0.10
OCN-1224SCWPK	$2.05
OCN-1224WSPK	$2.50
OCN-M6	$0.25
OCN-M6PK	$5.42
OCN M6RH	$0.25
OCN-M6SCW	$0.10
OCN-M6SCWPK	$2.05

Air Flow Monitor Modules

Part No.	Description	Price
AFM-01NC	Air Flow Monitor Switch, NC w/ clip and clamp	$37.50
AFM-01NO	Air Flow Monitor Switch, NO w/ clip and clamp	$37.50
AFM-80NC	Air Flow Monitor Switch, NC w/ 80mm guard	$38.75
AFM-80NO	Air Flow Monitor Switch, NO w/ 80mm guard	$38.75
AFM-92NC	Air Flow Monitor Switch, NC w/ 92mm guard	$38.75
AFM-92NO	Air Flow Monitor Switch, NO w/ 92mm guard	$38.75
AFM-120NC	Air Flow Monitor Switch, NC w/ 120mm guard	$38.75
AFM-120NO	Air Flow Monitor Switch, NO w/ 120mm guard	$38.75
AFM-KIT	Includes an AFM-01NC, clip, three plastic guards (80, 92, & 120mm), buzzer, LED and holder, switch and power supply.	$70.00

Fan power cords are available in any length or configuration by special order. Please call us for a quote on your custom power cord requirements.
Add $0.25 per foot for lengths in excess of 72 inches on standard fan cords and lengths in excess of 24 inches on daisy chains.
Add $0.80 for a NEMA 1-15P AC plug on any cord. (Use suffix “P”) Add $1.00 each for additional daisy chain cord head.
*Pricing indicated is for OEM’s and is for 100 pcs. For larger quantity pricing please check with one of our franchised distributors or with our customer service. Check our website to locate a distributor in your area. Price in U.S. Dollars and subject to change without notice.

KNIGHT
Electronics, Inc.

ORION FANS
10557 Metric Drive
Dallas, Texas 75243
800-323-2439 (Toll Free)
214-340-0265 (P)
214-340-5870 (F)
www.orionfans.com

Knight Electronics
Europe Stocking Location
Solid State Supplies

TÜV SÜD
ISO 9001
0916