Enabling the Electronics Revolution

PIHER sensing systems
an Amphenol® company

N-6

6 mm miniature carbon potentiometer

The N6 is a unique, fully RoHS & REACH ready Miniature Control Potentiometer with all the features of traditional full size potentiometers. The combination of wide electrical angle, reduced form factor, tape on reel packaging for automated high speed placement and overmoulding technology provides market leading performance in a compact & robust design. A ROHS reflow version (N6-R) with extra long mechanical life is also available.

The N6 has been conceived for the Industrial, Automotive and Appliance markets to provide a cost effective control solution. Further options include improved linearity and a selection of custom shafts and knobs.

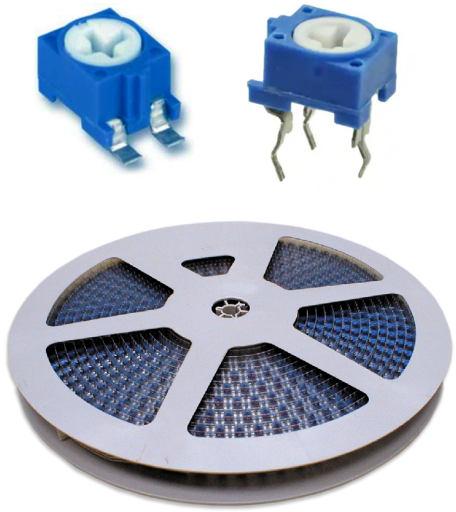

KEY FEATURES

- RoHS compliant materials
- Carbon resistive element
- Plastic substrate
- Over-molding manufacturing technique
- SMD or through hole mounting
- Embossed Tape (for SMD) packaging for automatic insertion and bulk for manual assembly
- Wiper positioned at 50%
- Both sides cross slot easy adjustment
- Accidental rotor movement protected
- Traceability ensured by date code marking
- Assembly method: stand up and lay down
- IP54 protection according to IEC 60529

ELECTRICAL SPECIFICATIONS

Taper	Linear
Range of values*	(Decad. 1.0 - 2.0 - 2.2 - 2.5 - 4.7 - 5.0) 100Ω ≤ Rn ≤ 1MΩ
Tolerance*	± 30%
Max. Voltage	100 VDC
Nominal power 50°C (122°F)	0.1 W
Residual resistance	≤ 2% Rn (10Ω min.)
Equivalent noise resistance	≤ 5% Rn
Operating temperature **	-25°C to +70°C (-13°F to + 158°F)

* Others available on request ** Up to 85°C depending on application.

APPLICATIONS

- Home and building automation
- Appliances
- Timer and control relays
- Power Supplies
- Alarms and Detectors
- Light dimmers

N-6

6 mm miniature carbon potentiometer

MECHANICAL SPECIFICATIONS

Mechanical rotation angle	280° ± 10°
Electrical rotation angle	245° ± 25°
Torque Rotational Stop	 0.2 to 3 Ncm (0.28 to 4.2 in-oz) › 7.5 Ncm (›10.5 in-oz)
Life	100 cycles

ENVIRONMENTAL TESTING

	Test conditions (CEI 393-1)	ΔR - Typical test results
Electrical life	1.000h at 50°C; 0.1 W	±5%
Mechanical life	100 cycles at 10 to15 cpm	±3 % (Rn ‹ 1M)
Temperature coefficient	–25° C; +70° C	±300 ppm/°C (Rn ≤ 100K)
Thermal cycling	16h at 85°C and 2h at -25°C	±2.5%
Damp heat	500h at 40°C and 95% relative humidity (RH)	±5%
Vibration	2h each plane at 10Hz - 55Hz	±2%
Storage	6 month at 23°C ±2°C and 50% RH	±2.5%

Out of range values may not comply with these results. Standard test conditions: temperature:23°C ±2°C and 45% to 70% RH

POWER RATING CURVE

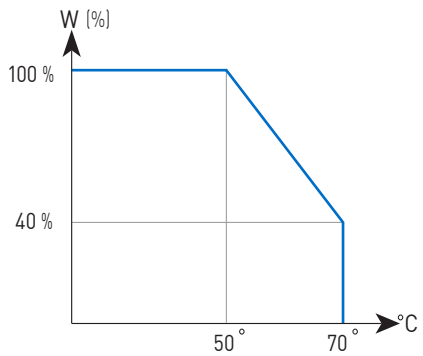

POSITIONING

Marking in the rotor indicates the wiper´s position.

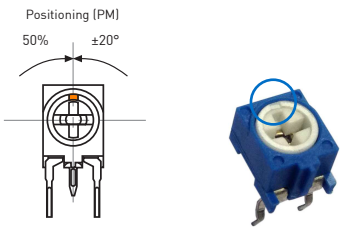

(shown at 50% of travel)

RECOMMENDED CONNECTIONS

Recommended connection circuit for a position sensor or control application (voltage divider circuit electronic design).

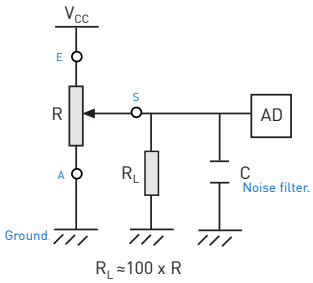

N-6

6 mm miniature carbon potentiometer

HOW TO ORDER

Stand-up Mounting / Through Hole - Example: N6S25T0N-102-3030

N6	S	25	T0	_	-	___	-	____
Series	Mounting method	Terminal size	Packaging[2]	Mounting type[3]		Ω-Value[4]		Tolerance[5]
	S - stand up	25 - 2.5mm	T0 = bulk	N = straight C = crimped		101 = 100Ω ... 105 = 1MΩ		1010 = ±10% 2020 = ±20% 3030 = ±30%

Lay-down Mounting / Through Hole- Example: N6L30T0N-102-3030

N6	L	__	T0	_	-	___	-	____
Series	Mounting method	Terminal size[1]	Packaging[2]	Mounting type[3]		Ω-Value[4]		Tolerance[5]
	L - lay down	25 - 2.5mm 30 - 3.0mm 50 - 5.0mm	T0 = bulk	N = straight C = crimped		101 = 100Ω ... 105 = 1MΩ		1010 = ±10% 2020 = ±20% 3030 = ±30%

Lay-down Mounting / SMD - Example: N6L50T8S-102-3030

N6	L	50	__	S	-	___	-	____	
Series	Mounting method	Terminal size	Packaging[2]	Mounting type[3]		Ω-Value[4]		Tolerance[5]	RoHS reflowable[6]
	L - lay down	50 - 5.0mm	T0 = bulk T7 = embossed tape T8 = embossed tape (sealed for vacuum pickup)	S = SMD		101 = 100Ω ... 105 = 1MΩ		1010 = ±10% 2020 = ±20% 3030 = ±30%	See N6R datasheet at www.piher.net

1. Terminal style:
2. Packaging: packaging possibilities depend on mounting, terminal style and crimping, see "available packaging option" below.
3. Crimping: - crimped terminal only available in bulk packaging "T0".
4. Ω- Value: XXX - First two digits of Ω-value
   XXX - Number of zeros
5. Tolerance: Default tolerance is ± 30%. For ±10%, ±20% and others: check availability
6. Option R: black housing & rotor color. Range of values: 250Ω ≤ Rn ≤ 500KΩ (see separate data sheet "N6R" at www.piher.net)

AVAILABLE PACKAGING OPTIONS

		Bulk	Embossed Tape
Mounting Type	Order Code	T0	T7 / T8
Non Crimped	N-6 S 25 __ N	x	
	N-6 L 25 __ N	x	
	N-6 L 30 __ N	x	
	N-6 L 50 __ N	x	
Crimped	N-6 S 25 __ C	x	
	N-6 L 25 __ C	x	
	N-6 L 30 __ C	x	
	N-6 L 50 __ C	x	
SMD	N-6 L 50 __ S	x	x

N-6

6 mm miniature carbon potentiometer

MOUNTING METHOD

Type S

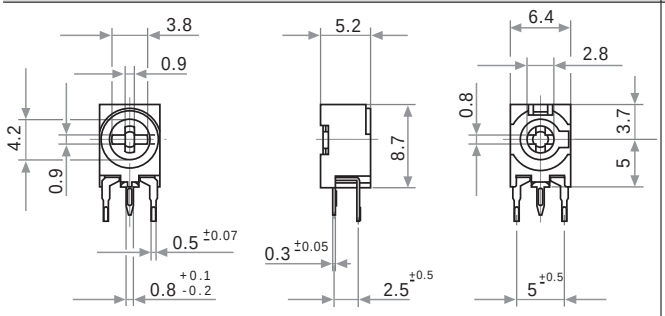

Terminals Side

Collector Side

Type L

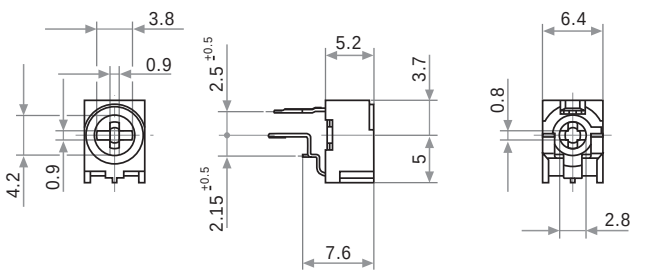

Top

Bottom

DIMENSIONS

Bulk packaging

N6S25 T0 C

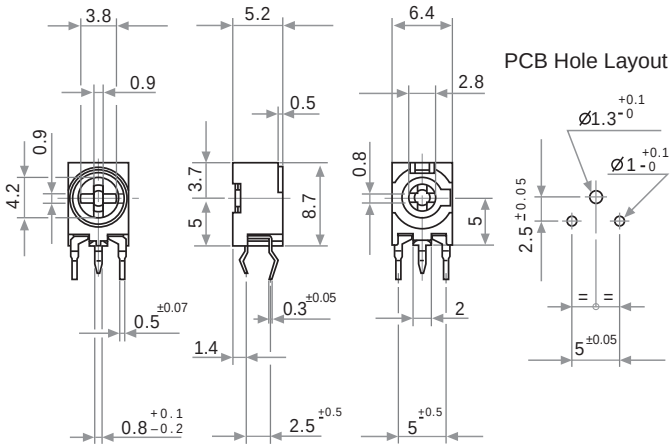

N6L30 T0 N

Download the STEP files at www.piher.net

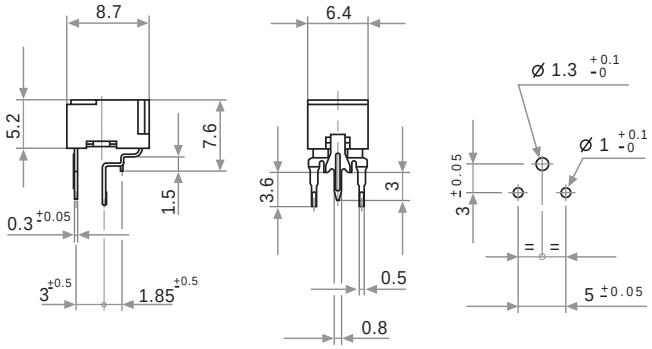

N6L25 T0 C

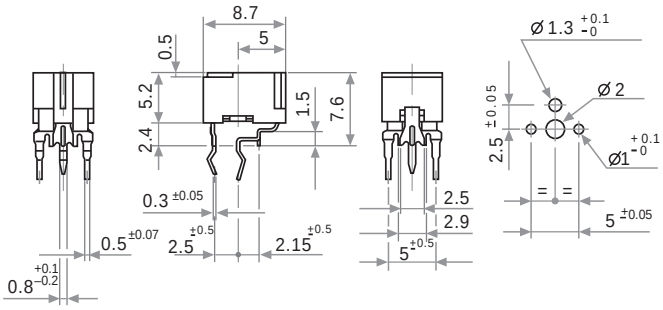

N6L50 T0 C

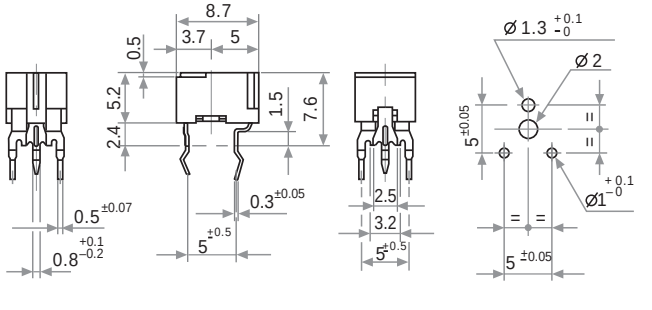

N-6

6 mm miniature carbon potentiometer

DIMENSIONS IN MM

SMD

N6L50 T0/T7/T8 S

T8 with sticker at bottom side

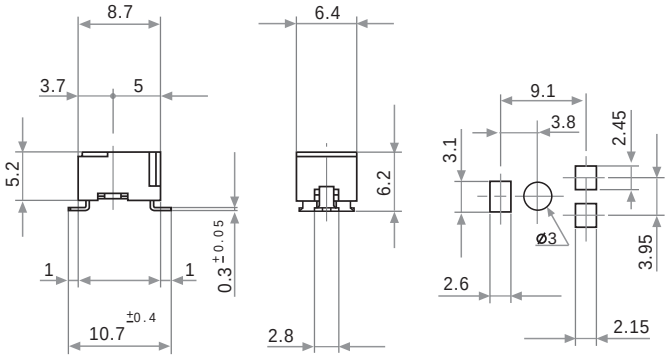

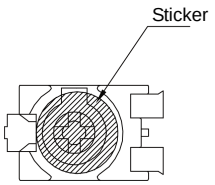

Crimping

Type S	Type L	Detail
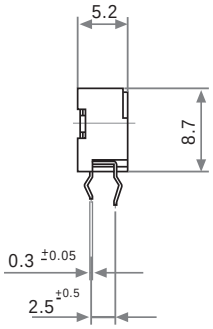	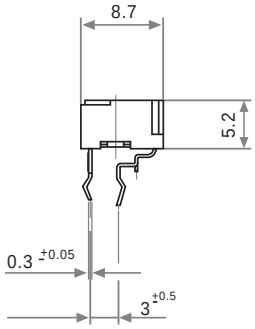	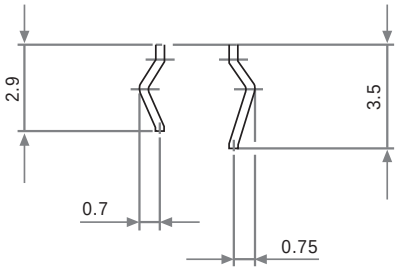

KNOBS / SHAFTS

Knob - Ref.: 5680 (colour: white)	Shaft - Ref.: 6133 (colour: black)
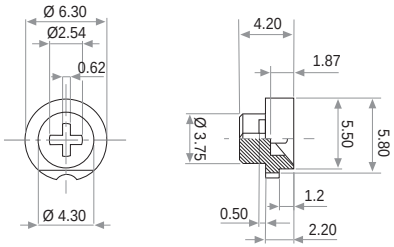	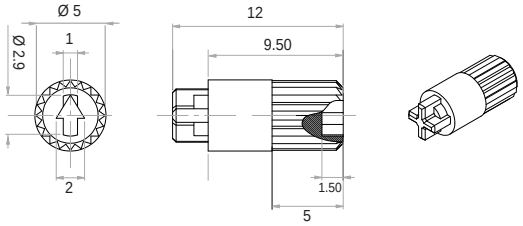

Please order both Knob and Shaft separately. If you wish to use your own custom plastic shaft/knob/actuator please contact Piher for advice about compatible materials.
For other rotor or knob/shaft colours please contact us at info@piher.net
Housing and rotor are black.

Download the STEP files here:
www.piher.net

PACKAGING

T0 - Bulk

500 units per box

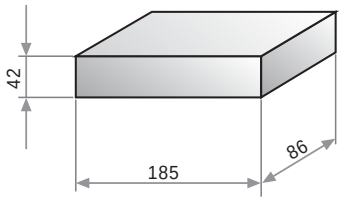

T7 / T8 - Embossed Tape

750 units/reel

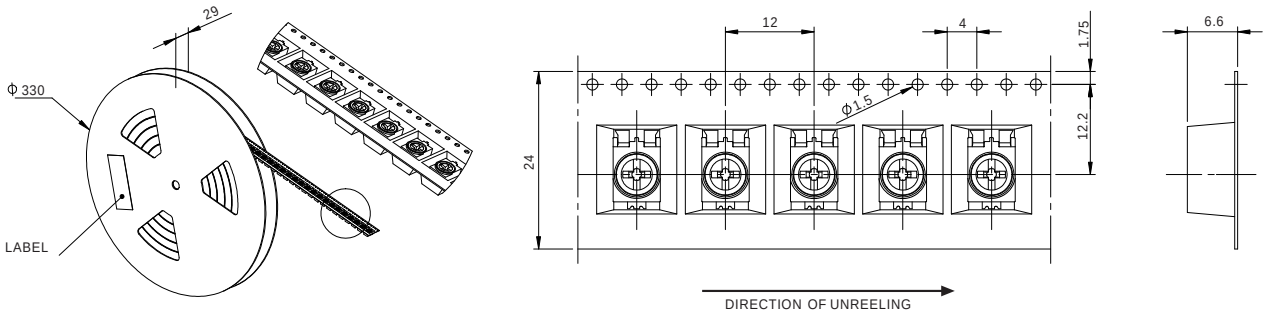

OUR ADVANTAGE

- Leading-edge innovative position sensing solutions
  - ▷Contactless (Hall-effect and Inductive Technology)
  - ▷Contacting (Potentiometers, Printed Electronics)
- Engineering design-in support
- All our products can be customized to fit target application and customer requirement
- Capability to move seamlessly from development to true high-volume production
- A global footprint with global engineering and commercial support
- One-stop shop not limited to position sensors (temperature, pressure, gas,...) through group collaboration
- Flexibility and entrepreneurship of a medium-sized company with the backing of Amphenol Corporation

Please always use the latest updated datasheets and 3D models published on our website.

Disclaimer:
The product information in this catalog is for reference purposes. Please consult for the most up to date and accurate design information.
Piher Sensors & Controls S.A., its affiliates, agents, and employees, and all persons acting on its or their behalf (collectively, "Piher"), disclaim any and all liability for any errors, inaccuracies or incompleteness contained herein or in any other disclosure relating to any product described herein.
Piher disclaims any and all liability arising out of the use or application of any product described herein or of any information provided herein to the maximum extent permitted by law. The product specifications do not expand or otherwise modify Piher's terms and conditions of sale, including but not limited to the warranty expressed therein, which apply to these products.
No license, express or implied, by estoppel or otherwise, to any intellectual property rights is granted by this document or by any conduct of Piher.
The products shown herein are not designed for use in medical, life-saving, or life-sustaining applications unless otherwise expressly indicated. Customers using or selling Piher products not expressly indicated for use in such applications do so entirely at their own risk and agree to fully indemnify Piher for any damages arising or resulting from such use or sale. Please contact authorized Piher personnel to obtain written terms and conditions regarding products designed for such applications.
Product names and markings noted herein may be trademarks of their respective owners. Information contained in and/or attached to this catalogue may be subject to export control regulations of the European Community, USA, or other countries. Each recipient of this document is responsible to ensure that usage and/or transfer of any information contained in this document complies with all relevant export control regulations. If you are in any doubt about the export control restrictions that apply to this information, please contact the sender immediately. For any Piher Exports, Note: All products / technologies are EAR99 Classified commodities. Exports from the United States are in accordance with the Export Administration Regulations. Diversion contrary to US law is prohibited.

CONTACT

Piher Sensing Systems
Polígono Industrial Municipal
Vial T2, Nº22
31500 Tudela
Spain

sales@piher.net

✆ +34 948 820 450

NEED QUICK HELP?
Our AI Virtual Assistant is available 24/7 to provide instant support—visit *chat.piher.info* to chat now!

Rev: 14/01/2025