HORIZONTAL & MODIFIED HEADERS

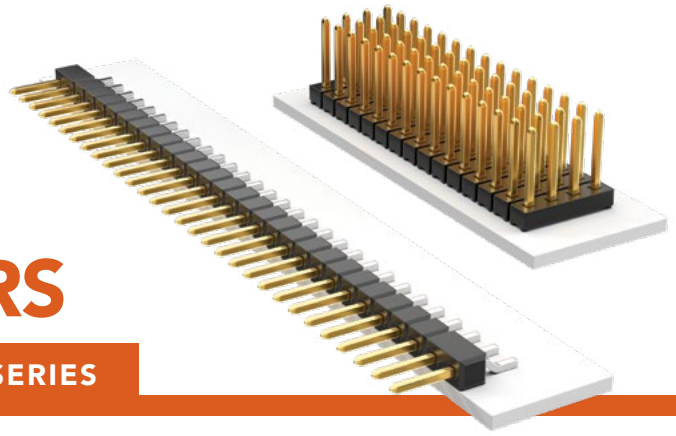

(2.00 mm) .0787" PITCH • MMT/MTMM SERIES

MMT/MTMM
Board Mates:
CLT, SQT*, SQW, ESQT, TLE, SMM, MMS

Cable Mates:
TCSD

***Important Note:**
SQT will not mate to the MMT –02 lead style .

SPECIFICATIONS

Insulator Material:
Black Liquid Crystal Polymer
Terminal Material:
Phosphor Bronze
Plating:
Au or Sn over
50 µ" (1.27 µm) Ni
Operating Temp Range:
-55 °C to +105 °C with Tin;
-55 °C to +125 °C with Gold

PROCESSING

Lead–Free Solderable:
Yes
SMT Lead Coplanarity (MMT):
(0.10 mm) .004" max (02-25)
(0.15 mm) .006" max (26-36)*
*(.004" stencil solution may be available; contact ipg@samtec.com)

MMT – 1 – NO. PINS PER ROW – LEAD STYLE – PLATING OPTION – ROW OPTION – OPTION

NO. PINS PER ROW: 02 thru 36

LEAD STYLE
–01
= (3.20 mm) .126" post
–02
= (4.45 mm) .175" post

PLATING OPTION
–F
= Gold flash on post, Matte Tin on tail
–L
= 10 µ" (0.25 µm) Gold post, Matte Tin on tail
–T
= Matte Tin

ROW OPTION
–SH
= Single Row
–DH
= Double Row
–MT
= Double Row Mixed Technology

OPTION
–K
= (4.00 mm) .157" DIA Polyimide Film Pick & Place Pad (3 positions min.)
–P
= Pick & Place Pad (2 positions min.)
–"XXX"
= Polarized Position Specify position of omitted pin
–TR
= Tape & Reel
–FR
= Full Reel Tape & Reel (must order max. quantity per reel; contact Samtec for quantity breaks)

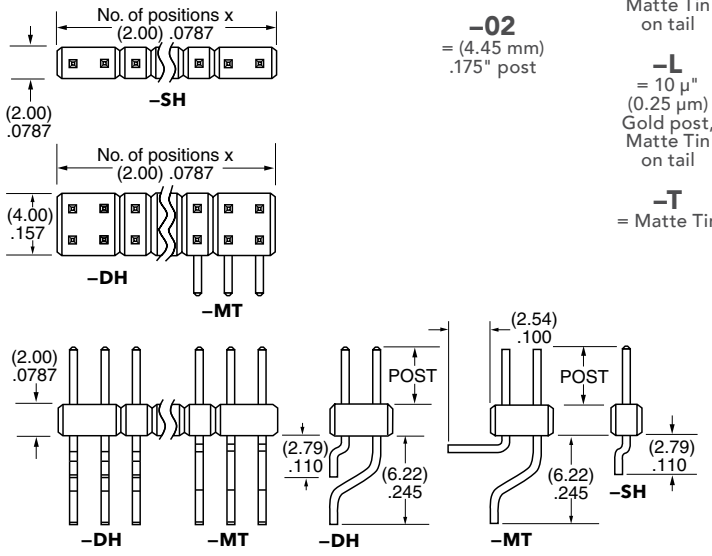

ALSO AVAILABLE
MOQ Required

Alignment pins
Locking clips
Molded pick & place pads

MTMM – 1 – NO. PINS PER ROW – LEAD STYLE – PLATING OPTION – ROW OPTION – POST HEIGHT – OPTION

NO. PINS PER ROW: 01 thru 50

LEAD STYLE: Specify LEAD STYLE from chart

LEAD STYLE	OAL
–02	(6.48) .255
–03	(7.67) .302
–04	(8.20) .323
–05	(9.58) .377
–06	(10.08) .397
–07	(11.58) .456
–08	(12.09) .476
–09	(13.59) .535
–10	(14.10) .555
–11	(15.09) .594
–12	(15.60) .614
–13	(17.09) .673
–14	(19.08) .751
–15	(21.08) .830

PLATING OPTION
–F
= Gold flash on post, Matte Tin on tail
–L
= 10 µ" (0.25 µm) Gold post, Matte Tin on tail
–T
= Matte Tin

ROW OPTION
–S
= Single Row
–D
= Double Row
–Q
= Quad Row

POST HEIGHT
–"XXX"
= Post Height in inches (0.13 mm) .005" increments
Example:
–070
= (1.78 mm) .070"

OPTION
–"XXX"
= Polarized Position Specify position of omitted pin

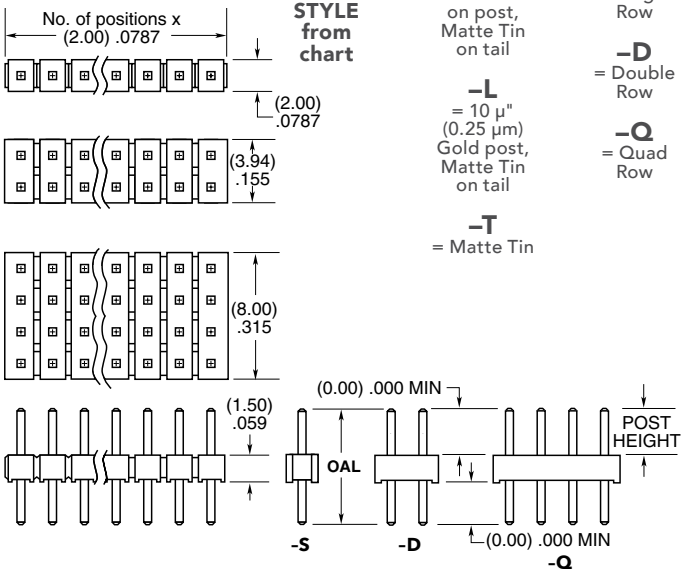

Note:
Some lengths, styles and options are non-standard, non-returnable.

Unless otherwise approved in writing by Samtec, all parts and components are designed and built according to Samtec's specifications which are subject to change without notice.