AMPHENOL PCD SHENZHEN

EXCEL | MATE MSD

Manual Service Disconnect

www.amphenolpcd.com.cn

INDUSTRIAL@AMPHENOL
TRUSTED GLOBALLY

CONTENTS

EXCEL|MATE MSD 2

EXCEL|MATE MSD - TECHNICAL CHARACTERISTICS 3

PRODUCT DIMENSIONS 4

HOW TO ORDER | EXCEL|MATE MSD 6

EXCEL|MATE MSD V - TECHNICAL CHARACTERISTICS 7

HOW TO ORDER | EXCEL|MATE MSD V 8

EXCEL|MATE MSD XL - TECHNICAL CHARACTERISTICS 9

PRODUCT DIMENSIONS 10

HOW TO ORDER | EXCEL|MATE MSD XL 13

EXCEL|MATE MINI MSD 14

EXCEL|MATE MINI MSD - TECHNICAL CHARACTERISTICS 15

PRODUCT DIMENSIONS 16

HOW TO ORDER | EXCEL|MATE MINI MSD 18

EXCEL|MATE MINI MSD V 19

HOW TO ORDER | EXCEL|MATE MINI MSD V 20

Amphenol PCD Manual Service Disconnect

Excel | Mate MSD is a safe and a reliable solution for HEV servicing.

Equipped with a two-stage lever to open the HVIL circuit prior to the separation of HV contacts, it is a tool-free solution for disconnecting the internal high voltage battery pack and protecting it from short circuit. All HV conductive contact surfaces on the receptacle assembly are finger-touch safe.

Available in a scalable design with a variety of fuse ratings.

KEY FEATURES

A two-stage lever provides an HVIL time delay

2 x integrated internal HVIL

Unique cooling structure

Dual-channel design lowers temperature rise

No tools required to unmate

Various fuse ratings

Receptacle can be front or rear mounted

APPLICATION	
It is a tool-free solution for disconnecting the internal high voltage battery pack and protecting it from short circuit.	
MECHANICAL	
Mating cycles	≥ 50 cycles
ELECTRICAL	
Fuse specification	up to 630A
With fuse:	
Rated current	Current is approximately 1/3 the fuse rating
Rated voltage	500V DC to 600V DC
With shunt:	
Rated current	260A Max @ Ambient 70°C
Rated voltage	1000V DC Max
ENVIRONMENTAL	
Protection degree	IP67, IP6K9K (mated)
Ambient temperature	-40°C to 70°C
Storage temperature	-40°C to 85°C
Operating temperature	-40°C to 125°C
Flammability	UL94V0
STANDARDS	
USCAR-2	
USCAR-37	
LV-215	
RoHS	

PRODUCT DIMENSIONS

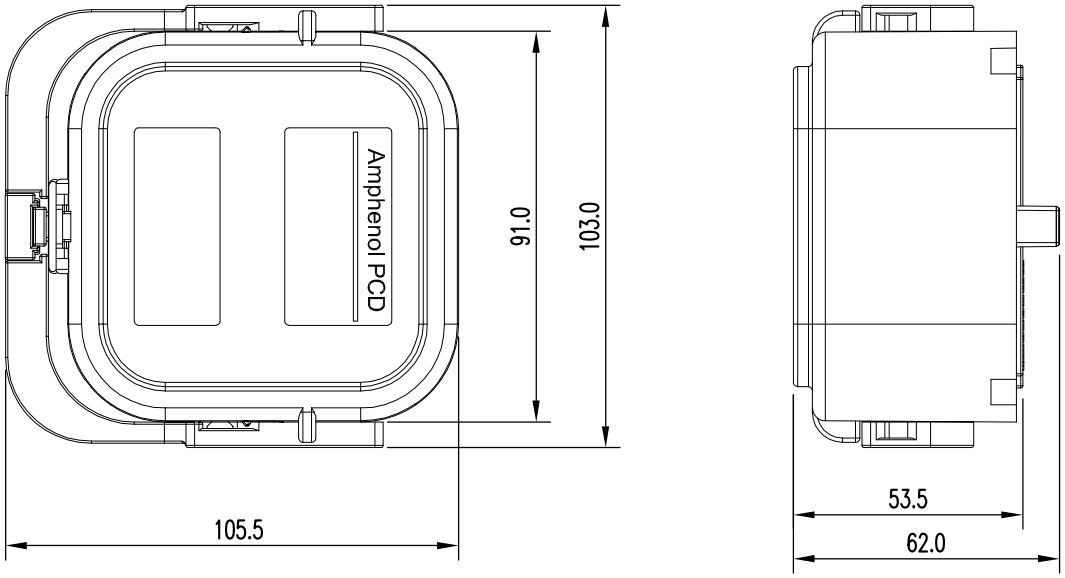

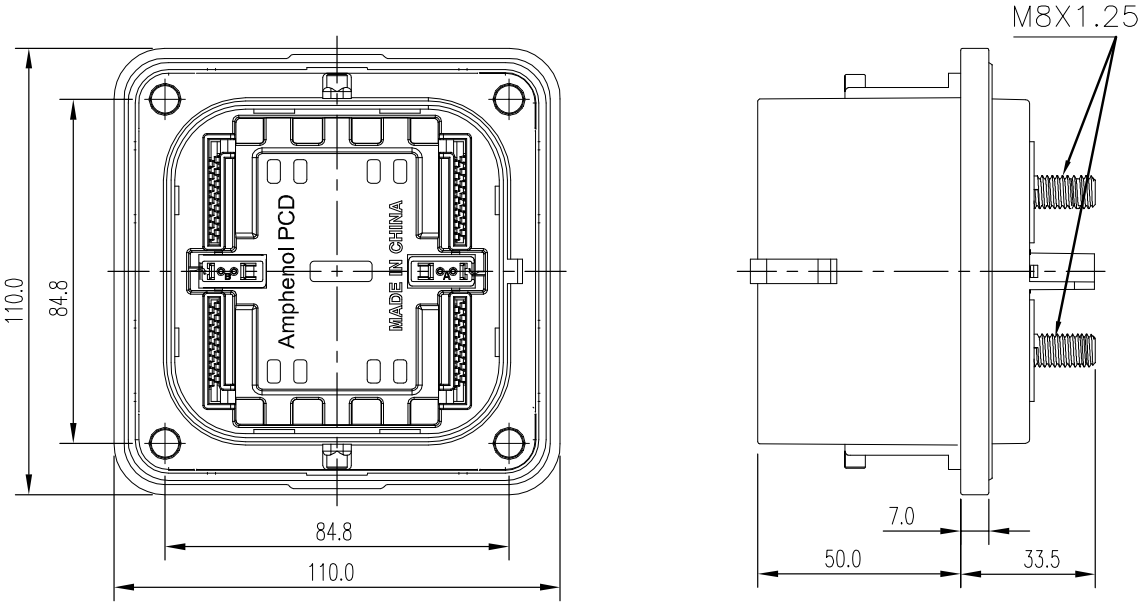

FRONT MOUNTED

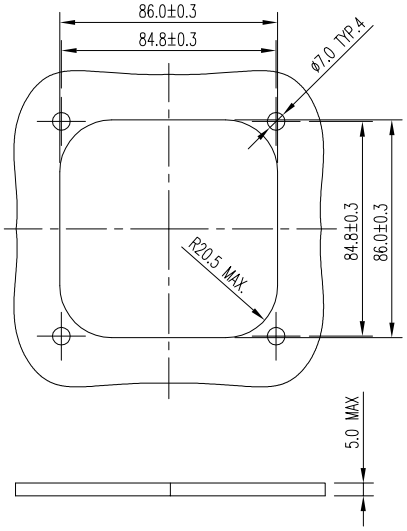

REAR MOUNTED

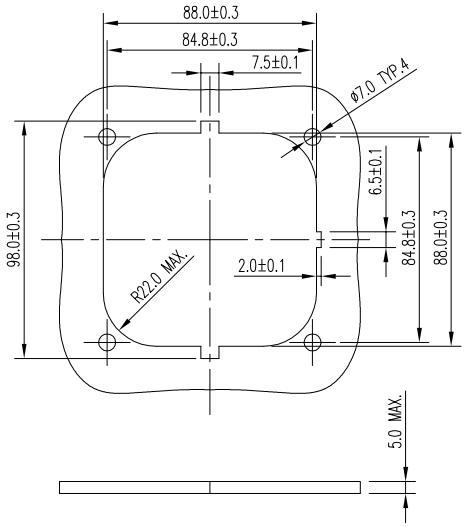

DUST CAP AVAILABLE
P/N: C270006810

Plug

MSD	M	200	1

Shell type:
- **M:** Plug

Fuse rating current:
- **200:** 200A
- **250:** 250A
- **315:** 315A
- **350:** 350A
- **400:** 400A
- **450:** 450A
- **500:** 500A
- **550:** 550A
- **630:** 630A
- **000:** No fuse needed, can directly use the terminal

Fuse brand:
- **1:** Ferraz
- **2:** Bussmann

Receptacle

MSD	F	000	F

Shell type:
- **F:** Receptacle

Fuse rating current:
- **000:** No fuse needed, can directly use the terminal

Flange mounted type:
- **F:** Front mounted
- **R:** Rear mounted

MSD V is an upgraded version of the standard MSD.

It provides a rated voltage of 800V and a plug with integrated fuse.The other parameters remain unchanged.

KEY FEATURES

A two-stage lever provides an HVIL time delay

2 x integrated internal HVIL

Unique cooling structure

Dual-channel design lowers temperature rise

No tools required to unmate

Various fuse ratings

Receptacle can be front or rear mounted

APPLICATION	
It is a tool-free solution for disconnecting the internal high voltage battery pack and protecting it from short circuit.	
MECHANICAL	
Mating cycles	≥ 50 cycles
ELECTRICAL	
Fuse specification	up to 630A
With fuse:	
Rated current	Current is approximately 1/3 the fuse rating
Rated voltage	800V DC
With shunt:	
Rated current	260A Max @ Ambient 70°C
Rated voltage	1000V DC Max
ENVIRONMENTAL	
Protection degree	IP67, IP6K9K (mated)
Ambient temperature	-40°C to 70°C
Storage temperature	-40°C to 85°C
Operating temperature	-40°C to 125°C
Flammability	UL94V0
STANDARDS	
USCAR-2	
USCAR-37	
LV-215	
RoHS	

Plug

MSD V	**M**	**200**

Shell type:
M: Plug

Fuse rating current:
200: 200A
250: 250A
315: 315A
350: 350A
400: 400A
450: 450A
500: 500A
550: 550A
630: 630A
000: No fuse needed, can directly use the terminal

Fuse brand:
Bussmann (by default)**,** other brands, please contact us.

Receptacle

MSD V	**1**	**F**	**000**	**F**

Contact:
1: Improved contact conductivity

Shell type:
F: Receptacle

Fuse rating current:
000: No fuse needed, can directly use the terminal

Flange mounted type:
F: Front mounted
R: Rear mounted

KEY FEATURES

1 x integrated internal HVIL

Unique cooling structure

High current contacts with Amphenol Radsok technology

No tools required to unmate

Various fuse ratings

Receptacle can be front or rear mounted

APPLICATION	
It is a tool-free solution for disconnecting the internal high voltage battery pack and protecting it from short circuit.	
MECHANICAL	
Mating cycles	≥ 500 cycles
ELECTRICAL	
Fuse specification	up to 630A
With fuse:	
Rated current	300A Max
Rated voltage	1000V DC
With shunt:	
Rated current	300A
Rated voltage	1500V DC Max
ENVIRONMENTAL	
Protection degree	IP67, IP6K9K (mated)
Ambient temperature	-40°C to 70°C
Storage temperature	-40°C to 85°C
Operating temperature	-40°C to 125°C
Flammability	UL94V0
STANDARDS	
USCAR-2	
USCAR-37	
LV-215	
RoHS	

PRODUCT DIMENSIONS

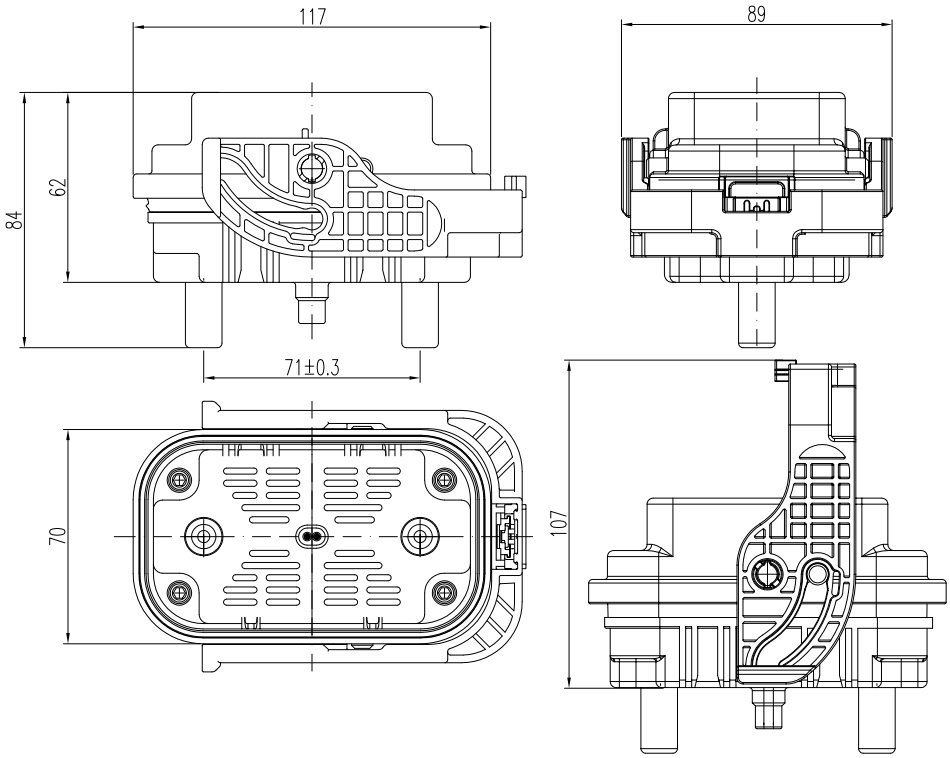

FRONT MOUNTED

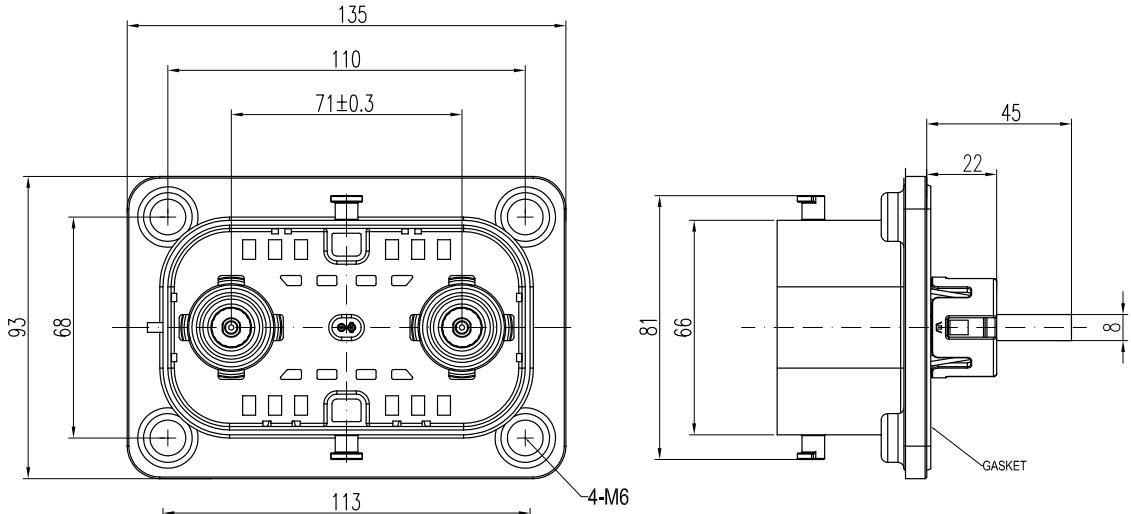

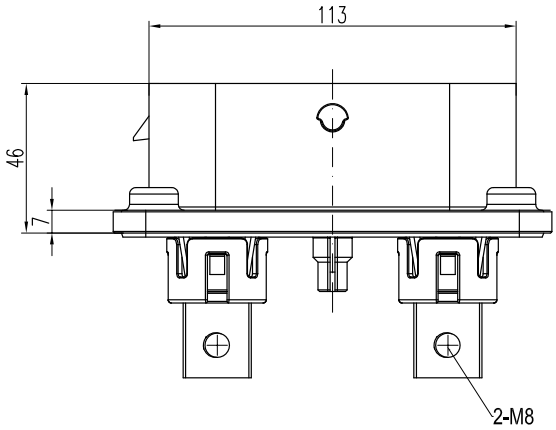

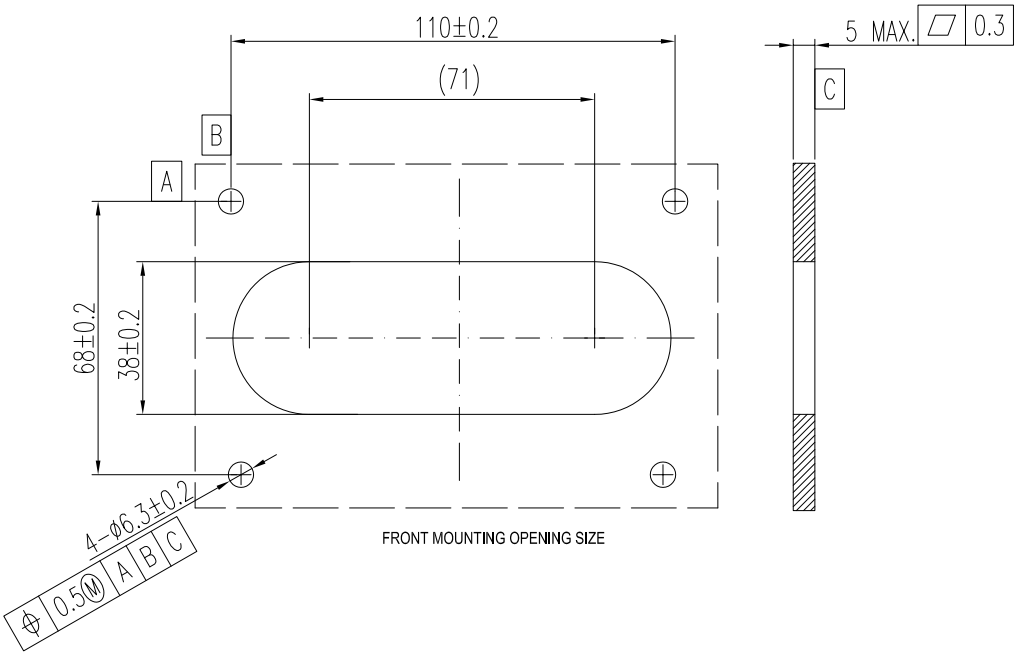

REAR MOUNTED

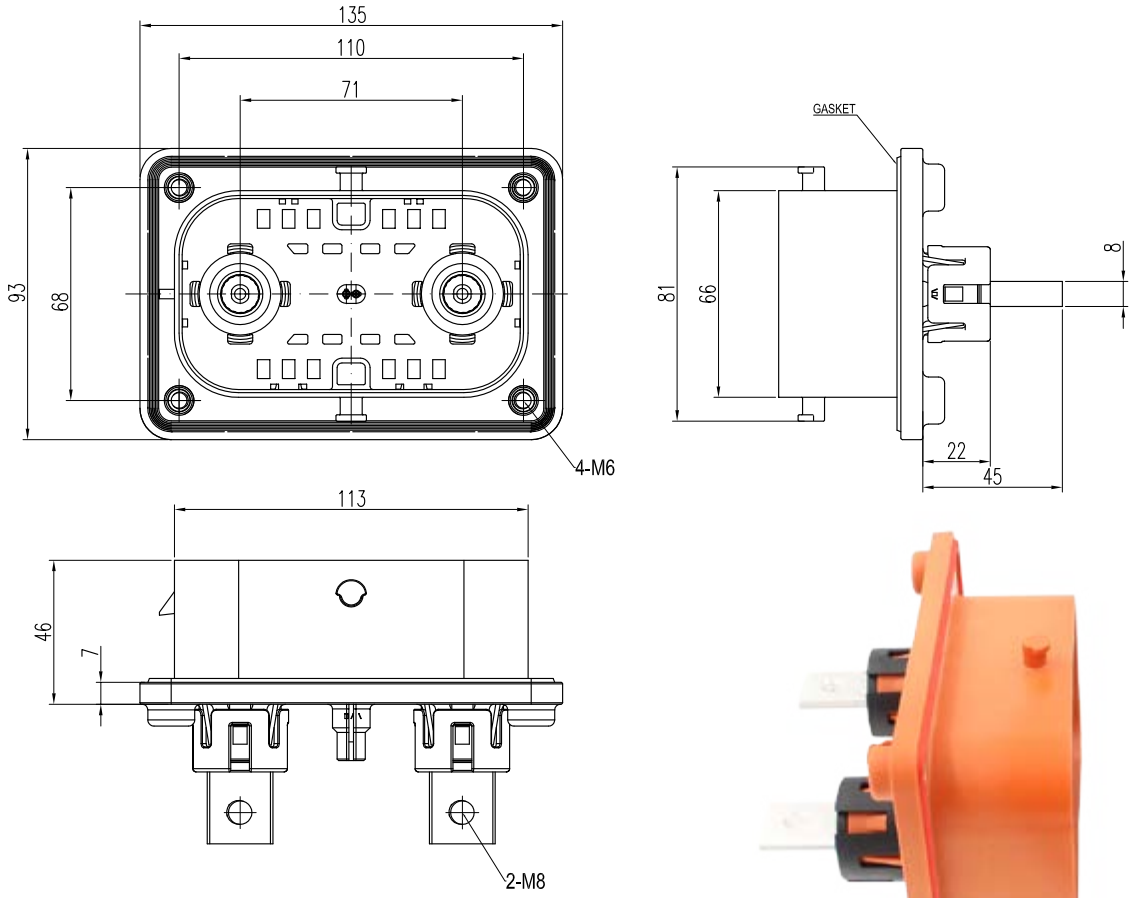

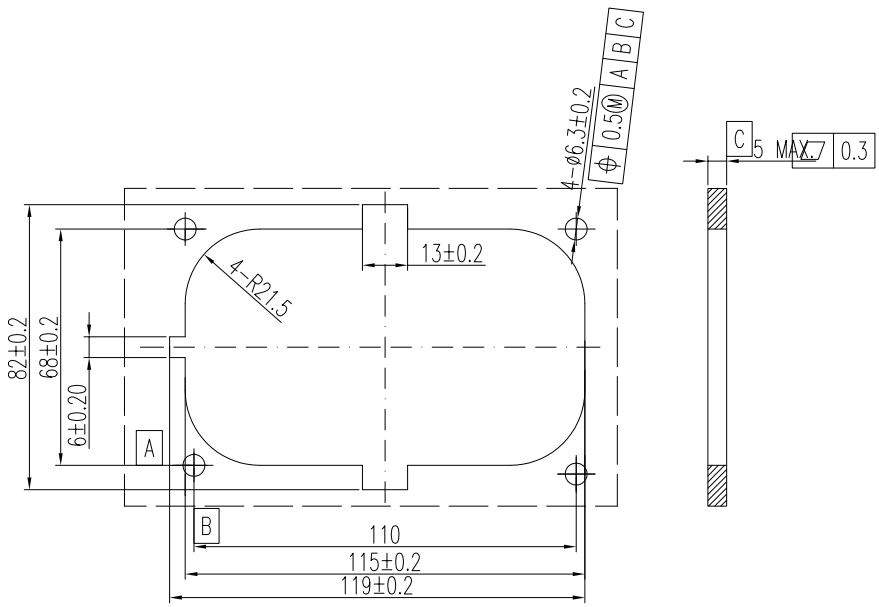

REAR MOUNTING OPENING SIZE

Plug

MSD XL	M	200
Shell type: **M:** Plug		
Fuse rating current: **200:** 200A **250:** 250A **315:** 315A **350:** 350A **400:** 400A **450:** 450A **500:** 500A **550:** 550A **630:** 630A **000:** No fuse needed, can directly use the terminal		
Fuse brand : **Bussmann** (by default)**,** other brands, please contact us.		

Receptacle

MSD XL	F	000	F
Shell type: **F:** Receptacle			
Fuse rating current: **000:** No fuse needed, can directly use the terminal			
Flange mounted type: **F:** Front mounted **R:** Rear mounted			

Amphenol PCD MINI Manual Service Disconnect

Mini MSD has been developped from the standard MSD.Smaller in size and lower in cost, it offers a more compact solution.

Available in a scalable design with a variety of fuse ratings.

KEY FEATURES

A two-stage lever provides an HVIL time delay

1 x integrated internal HVIL

Unique cooling structure

Dual-channel design lowers temperature rise

No tools required to unmate

Various fuse ratings

Receptacle can be front or rear mounted

APPLICATION	
It is a tool-free solution for disconnecting the internal high voltage battery pack and protecting it from short circuit.	
MECHANICAL	
Mating cycles	≥ 50 cycles
ELECTRICAL	
Fuse specification	up to 400A
With fuse:	
Rated current	Current is approximately 1/3 the fuse rating (170A Max)
Rated voltage	750V DC
With shunt:	
Rated current	170A Max
Rated voltage	1500V DC Max
ENVIRONMENTAL	
Protection degree	IP67, IP6K9K (mated)
Ambient temperature	-40°C to 70°C
Storage temperature	-40°C to 85°C
Operating temperature	-40°C to 125°C
Flammability	UL94V0
STANDARDS	
USCAR-2	
USCAR-37	
LV-215	
RoHS	

PRODUCT DIMENSIONS

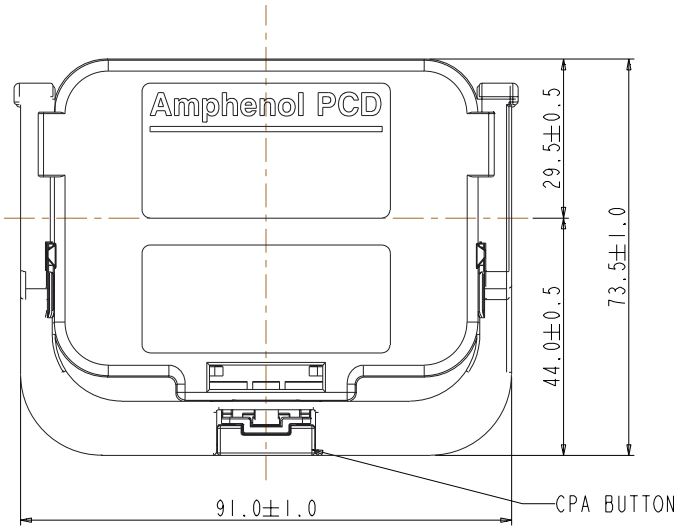

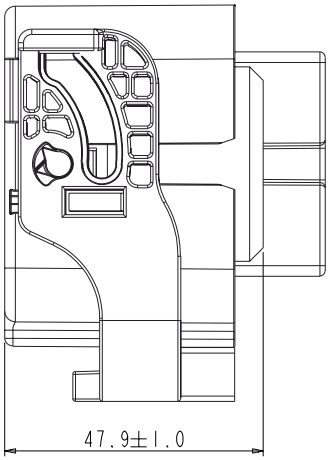

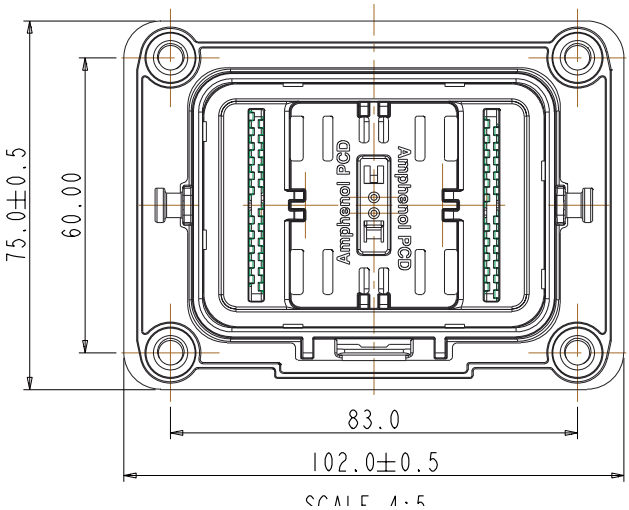

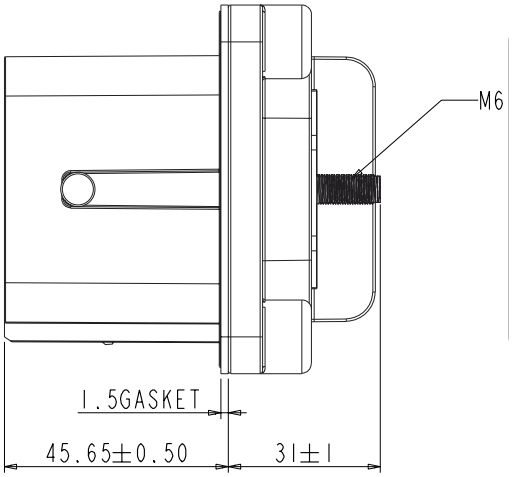

FRONT MOUNTED

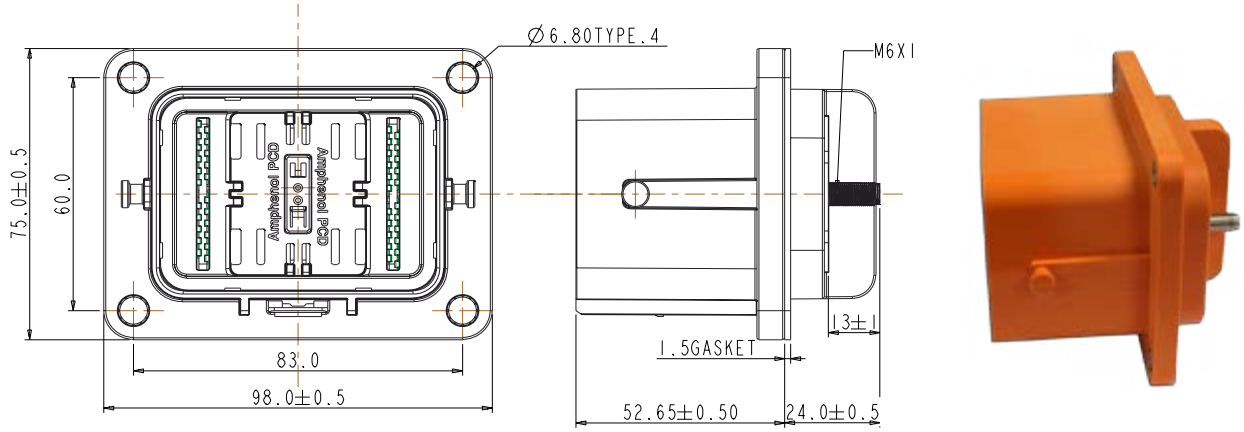

REAR MOUNTED

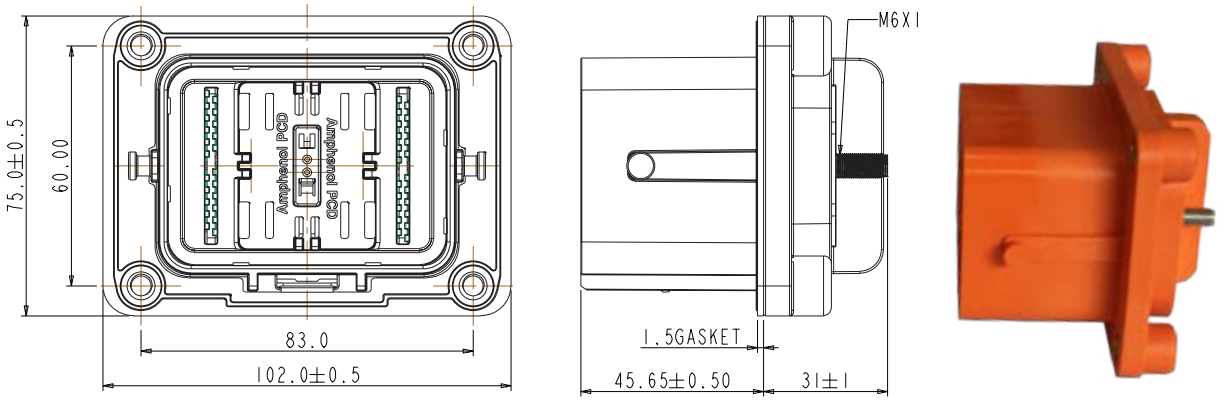

DUST CAP AVAILABLE:
P/N: C270006809

Plug

MINI MSD	M	200

Shell type:
M: Plug

Fuse rating current:
080: 80A
100: 100A
125: 125A
160: 160A
200: 200A
250: 250A
315: 315A
400: 400A
000: No fuse needed, can directly use the terminal

Fuse brand :
Bussmann (by default)**,** other brands, please contact us.

Receptacle

MINI MSD	F	000	F

Shell type:
F: Receptacle

Fuse rating current:
000: No fuse needed, can directly use the terminal

Flange mounted type :
F: Front mounted
R: Rear mounted

KEY FEATURES

A two-stage lever provides an HVIL time delay

1 x integrated internal HVIL

Unique cooling structure

Dual-channel design lowers temperature rise

No tools required to unmate

Various fuse ratings

Receptacle can be front or rear mounted

APPLICATION	
It is a tool-free solution for disconnecting the internal high voltage battery pack and protecting it from short circuit.	
MECHANICAL	
Mating cycles	≥ 50 cycles
ELECTRICAL	
Fuse specification	up to 400A
With fuse:	
Rated current	Current is approximately 1/3 the fuse rating (220A Max)
Rated voltage	750V DC
With shunt:	
Rated current	220A Max
Rated voltage	1500V DC Max
ENVIRONMENTAL	
Protection degree	IP67, IP6K9K (mated)
Ambient temperature	-40°C to 70°C
Storage temperature	-40°C to 85°C
Operating temperature	-40°C to 125°C
Flammability	UL94V0
STANDARDS	
USCAR-2	
USCAR-37	
LV-215	
RoHS	

HOW TO ORDER - EXCEL|MATE MINI MSD V

Plug: With fuse

MINI MSD	M	2002

Shell type:
M: Plug

Fuse rating current:
0802: 80A
1002: 100A
1252: 125A
1602: 160A
2002: 200A
2502: 250A
3152: 315A
4002: 400A

Fuse brand:
Bussmann (by default), other brands, please contact us.

Plug: With shunt

MINI MSD	VM	000

Shell type:
VM: Plug, shunt

000: No fuse needed, can directly use the terminal

Receptacle

MINI MSD	V	F	000	F

V: Built-in gasket seal, row connection
V1: Built-in gasket seal, stud connection
V2: Flat gasket seal, stud connection

Shell type:
F: Receptacle

Fuse rating current:
000: No fuse needed, can directly use the terminal

Flange mounted type:
F: Front mounted
R: Rear mounted (only available for V2)

V

V1

V2

Amphenol PCD Shenzhen

Building 21
1st Liao Keng Industrial Zone
Shi Yan Street, Bao An District Shenzhen 518108
China

Tel.: +86 755-8173-8000
Fax: +86 755-8173-8180
Email: inquiry@amphenolpcd.com.cn

www.amphenolpcd.com.cn

Notes:

Amphenol PCD Shenzhen has made every effort to ensure that the information contained in this catalog is accurate at the time of publication. Specifications or information stated in this publication are subject to change without notice.

Amphenol PCD Shenzhen reserves the right to clarify this catalog.