M85049/93-16 ✔ ACTIVE

Split Banding Ring

TE Internal #: EM6348-000

Split Ring Ferrule, Composite, Split Banding Ring

View on TE.com >

Connectors > Connector Accessories > Connector Strain Relief



Strain Relief Accessory Type: **Split Ring Ferrule**

Primary Product Material: **Composite**

Operating Temperature Range: **-65 – 175 °C [-85 – 347 °F]**

Features

Product Type Features

Strain Relief Accessory Type	Split Ring Ferrule

Body Features

Primary Product Material	Composite

Dimensions

Product Length	22.35 mm[.88 in]

Usage Conditions

Operating Temperature Range	-65 – 175 °C[-85 – 347 °F]

Industry Standards

Compatible With Approved Standards Products	85049/93

Other

Entry Size Code	16

Product Compliance

For compliance documentation, visit the product page on TE.com>

EU RoHS Directive 2011/65/EU	Compliant
EU ELV Directive 2000/53/EC	Compliant
China RoHS 2 Directive MIIT Order No 32, 2016	有害物质含量符合标准要求 No Restricted Substance(s) Above Threshold
EU REACH Regulation (EC) No. 1907/2006	Current ECHA Candidate List: JUNE 2025 (250)

	Candidate List Declared Against: JUNE 2025 (250) Does not contain REACH SVHC
Halogen Content	BFR/CFR/PVC Free, but Br/Cl >900 ppm in other sources.
Solder Process Capability	Not applicable for solder process capability

Product Compliance Disclaimer

This information is provided based on reasonable inquiry of our suppliers and represents our current actual knowledge based on the information they provided. This information is subject to change. The part numbers that TE has identified as EU RoHS compliant have a maximum concentration of 0.1% by weight in homogenous materials for lead, hexavalent chromium, mercury, PBB, PBDE, DBP, BBP, DEHP, DIBP, and 0.01% for cadmium, or qualify for an exemption to these limits as defined in the Annexes of Directive 2011/65/EU (RoHS2). Finished electrical and electronic equipment products will be CE marked as required by Directive 2011/65/EU. Components may not be CE marked. Additionally, the part numbers that TE has identified as EU ELV compliant have a maximum concentration of 0.1% by weight in homogenous materials for lead, hexavalent chromium, and mercury, and 0.01% for cadmium, or qualify for an exemption to these limits as defined in the Annexes of Directive 2000/53/EC (ELV). Regarding the REACH Regulation, the information TE provides on SVHC in articles for this part number is based on the latest European Chemicals Agency (ECHA) 'Guidance on requirements for substances in articles' posted at this URL: https://echa.europa.eu/guidance-documents/guidance-on-reach

Also in the Series | Split Banding Ring



Connector Strain Relief(16)

Customers Also Bought



TE Part #CW2823-000
R85049/128-3



TE Part #EM6343-000
R85049/93-08

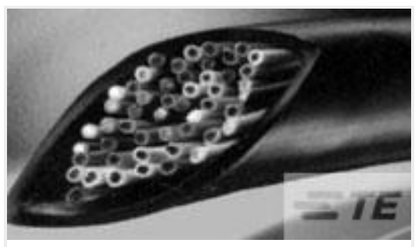

TE Part #3419254003
NTFR-1/4-0-SP



TE Part #EM6342-000
R85049/93-06



TE Part #EM6349-000
R85049/93-18



TE Part #817997-SF
FN3288-40-33-C35-R65



TE Part #EM6341-000
R85049/93-04

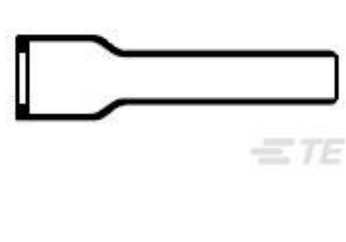

TE Part #807258-000
202D211-3/42-0

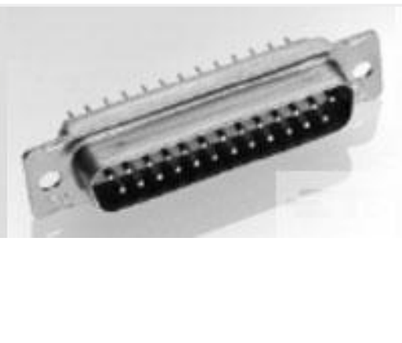

TE Part #204522-2
RECEPT ASSY,104 POSN,AMPLIMITE

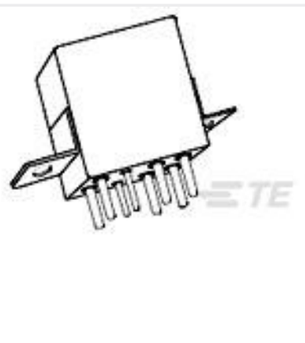

TE Part #1617749
FCA-210-0924M=M83536/9-024M

Documents

Product Drawings

R85049/93-16

English

Datasheets & Catalog Pages

Circular Backshells

English