INCH-POUND
MIL-PRF-24236/19L
18 April 2014
SUPERSEDING
MIL-PRF-24236/19K
2 February 2007

PERFORMANCE SPECIFICATION SHEET

SWITCHES, THERMOSTATIC, (BIMETALLIC), (SUBMINIATURE), TYPE I, HERMETICALLY SEALED, SINGLE POLE, SINGLE THROW (SPST), 1 AMPERE AND LOW LEVEL

This specification is approved for use by all Departments and Agencies of the Department of Defense.

The requirements for acquiring the product described herein shall consist of this specification sheet and MIL-PRF-24236.

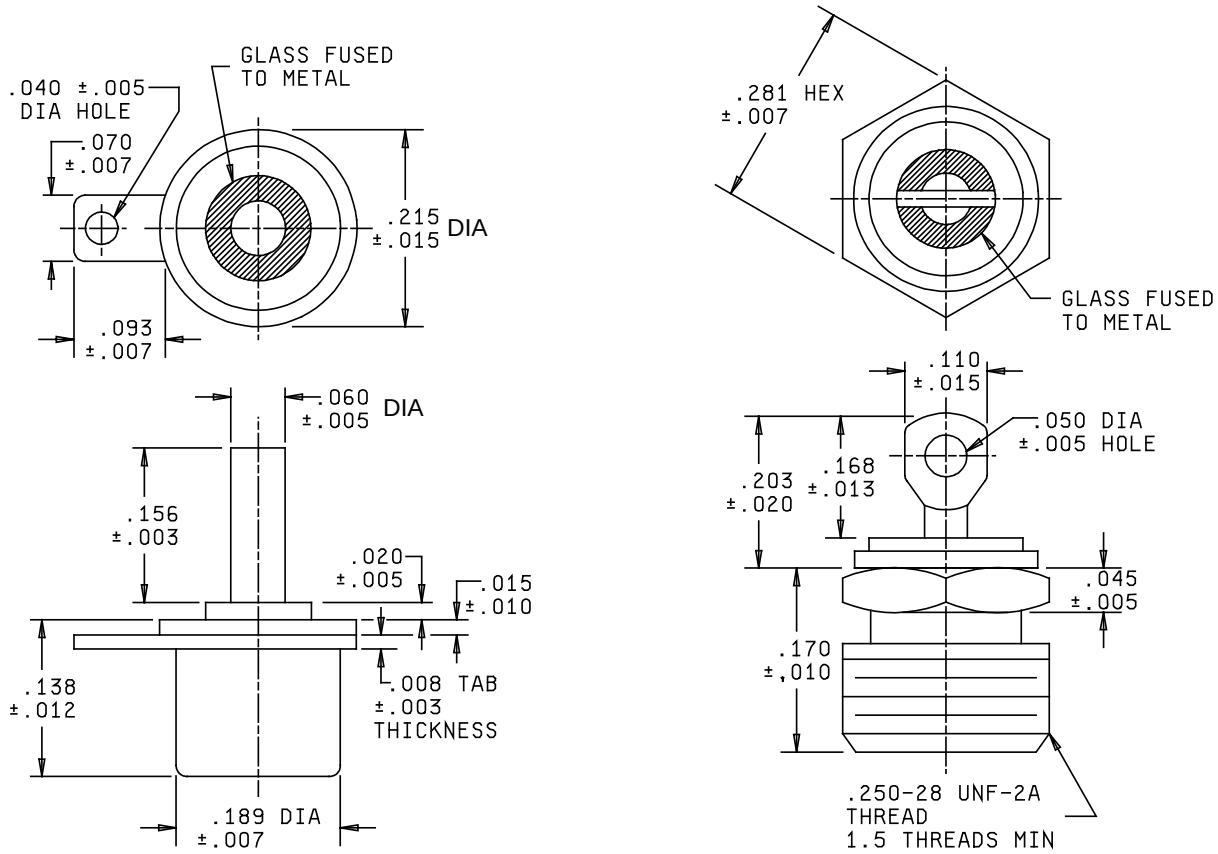

Configuration 1 Configuration 2

FIGURE 1. Switches.

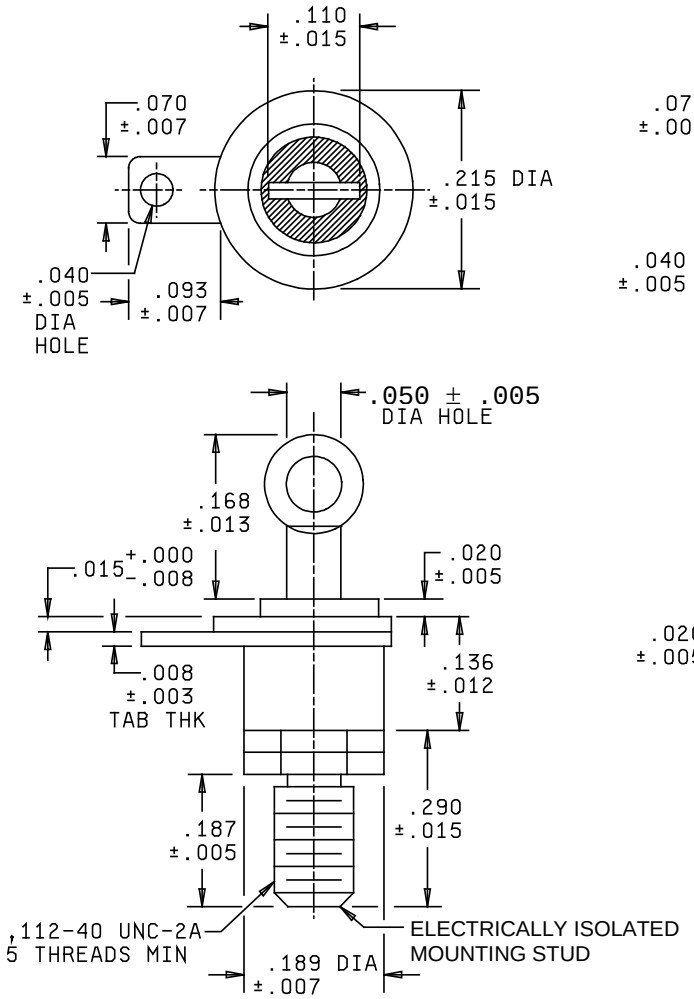

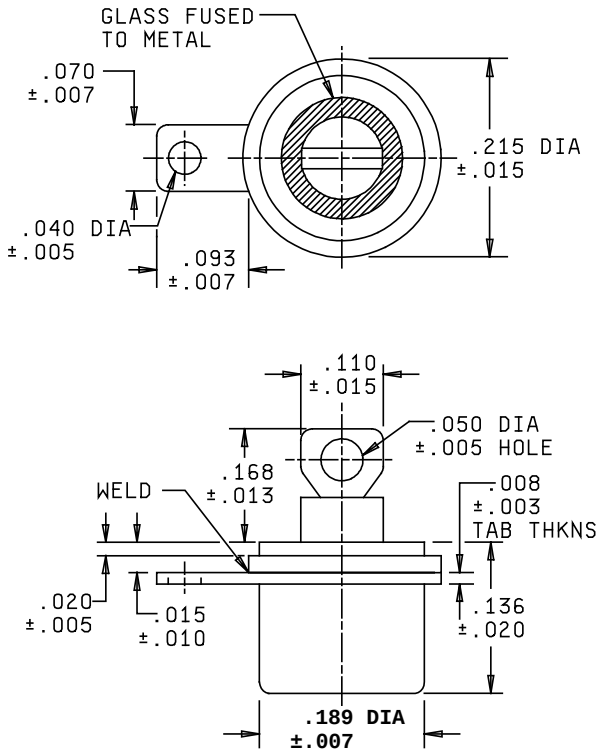

NOTE:
1. Orientation of pin, relative to tab, not controlled.

Configuration 3

Configuration 4

FIGURE 1. Switches - Continued.

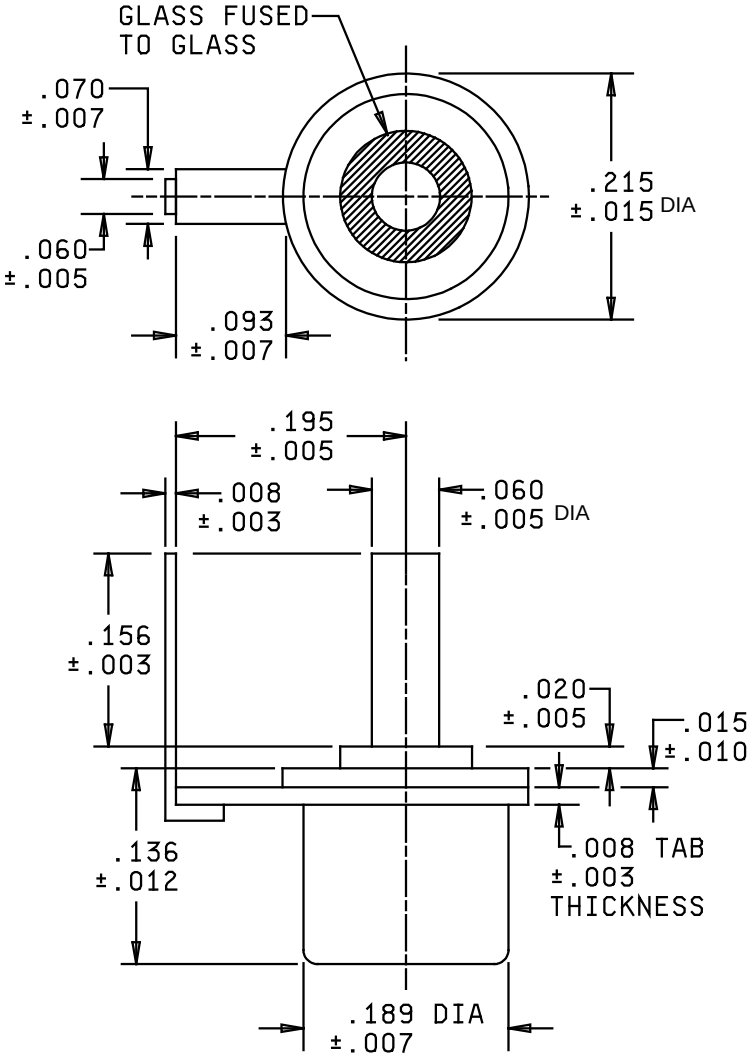

Configuration 5

Inches	mm	Inches	mm	Inches	mm	Inches	mm
.003	0.08	.015	0.38	.093	2.36	.187	4.75
.005	0.13	.020	0.51	.110	2.79	.189	4.80
.007	0.18	.040	1.02	.112	2.84	.203	5.16
.008	0.20	.045	1.14	.136	3.45	.215	5.46
.010	0.25	.050	1.27	.156	3.96	.250	6.35
.012	0.30	.060	1.52	.168	4.27	.281	7.14
.013	0.33	.070	1.78	.170	4.32	.290	7.37

NOTES:
1. Dimensions are in inches.
2. Metric equivalents are given for general information only.

FIGURE 1. Switches - Continued.

REQUIREMENTS:

Dimensions and configuration: See figure 1.

Operating temperature range: -30°F to 400°F.

Class: 6, vibration 10 to 2,000 Hz, 30 G.
Notes:
1. Devices with open on temperature rise should not be subjected to vibration while at temperatures of 75°F or more below the opening temperature.
2. Devices with close on temperature rise should not be subjected to vibration while at temperatures of 75°F or more above the opening temperature.

Mounting: See figure 1. 1/

Weight:

Configuration 1: Approximately 0.4 gram.
Configuration 2: Approximately 0.9 gram.
Configuration 3: Approximately 1.2 grams.
Configurations 4 and 5: Approximately 0.9 gram.

Creepage: Applicable.

Dielectric withstanding voltage: 2/

500 V ac for 5 seconds at atmospheric pressure.
250 V ac at 70,000 feet.

Configuration and contact action: See table I.

High temperature setting: 0°F to 400°F (see table II and table III).

High temperature setting tolerance: ±8°F.

Low temperature setting (differential): 30°F ±8°F below the applicable high temperature setting.

Electrical ratings:

1.0 ampere resistive at 115 V ac, 60 Hz.
1.0 ampere resistive at 28 V dc.

Low level: 10 milliamperes resistive at 30 millivolts dc or 30 millivolts peak ac.

Endurance: 10,000 cycles.

Low level: When specified, see PIN information.

Contact resistance: In accordance with MIL-PRF-24236, except close on temperature rise devices with set points greater than 175°F shall not exceed 100 milliohms.

Initial contact resistance shall not exceed 50 milliohms; following endurance test, contact resistance shall not exceed 100 milliohms.

1/ All configurations are of grounded construction. Configuration 3 has an isolated mounting stud.
2/ Ratings also apply between mounting stud and case of configuration 3.

Salt spray (corrosion): In accordance with MIL-PRF-24236, except switches shall be subjected to and pass the seal test after undergoing salt spray.

NOTE: Destructive corrosion shall be construed as any type of corrosion which in any way interferes with the mechanical or electrical performance of the switch, or corrosion which causes seal failure.

Marking: Identification marking shall be placed on the unit package label or tag.

Extent of qualification: See table IV.

Part or Identifying Number(PIN): PINs shall be assigned as illustrated below:

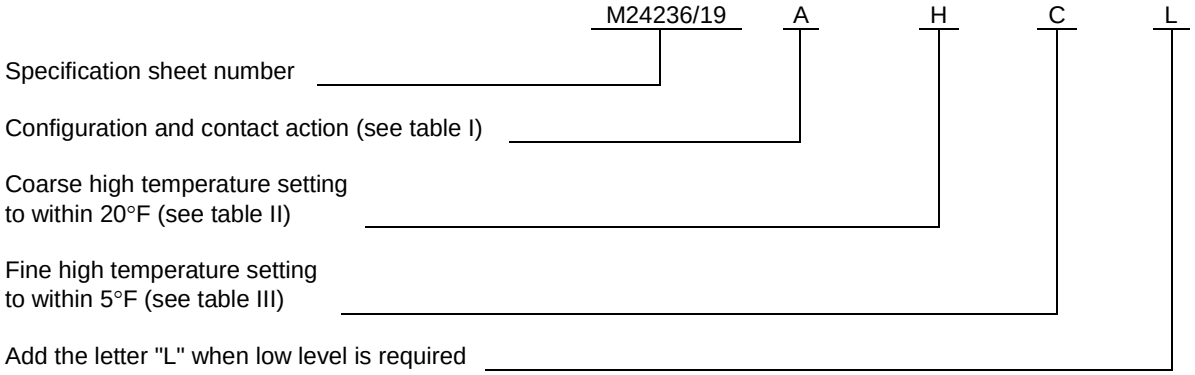

NOTE: PIN M24236/19-AHCL identifies a switch that closes on increasing temperature at 120°F ±8°F with a temperature differential of 30°F ±8°F with low level capabilities.

TABLE I. Configuration and contact action. 1/

	Configuration					Contact action
	1	2	3	4	5	
Code - - -	A	C	E	G	J	Close on increasing temperature
Code - - -	B	D	F	H	K	Close on decreasing temperature
Code - - -	A	C	E	G	J	Open on decreasing temperature 2/
Code - - -	B	D	F	H	K	Open on increasing temperature 2/

1/ For switches that operate as follows:
- a. Close on increasing temperature; contacts close at high temperature setting and open at high temperature setting less 30°F differential temperature.
- b. Close on decreasing temperature; contacts close at high temperature setting less 30°F differential temperature and open at high temperature setting.
- c. Open on increasing temperature; contacts open at high temperature setting and close at high temperature setting less 30°F differential temperature setting.
- d. Open on decreasing temperature; contacts open at high temperature setting less 30°F differential temperature and close at high temperature setting.

2/ Information only.

TABLE II. Coarse high temperature setting to within 20°F.

Code	Temperature	Code	Temperature	Code	Temperature
	(°F)		(°F)		(°F)
A - - - - -	-30	H - - - - -	110	Q - - - - -	250
B - - - - -	-10	J - - - - -	130	R - - - - -	270
C - - - - -	10	K - - - - -	150	S - - - - -	290
D - - - - -	30	L - - - - -	170	T - - - - -	310
E - - - - -	50	M - - - - -	190	U - - - - -	330
F - - - - -	70	N - - - - -	210	V - - - - -	350
G - - - - -	90	P - - - - -	230	W - - - - -	385

TABLE III. Fine high temperature setting to within 5°F.

Code	Unit
A - - - - - - -	0
B - - - - - - -	+5
C - - - - - - -	+10
D - - - - - - -	+15

TABLE IV. Extent of qualification.

Configuration	Number of samples required	Tests	Qualifies
1	All in accordance with table of MIL-PRF-24236	Complete in accordance with qualification inspection of MIL-PRF-24236	All
2 3 4 5	Two each Two each Two each Two each	Visual and mechanical examination	

Supersession data: See table V.

TABLE V. Supersession data.

Superseded military PIN M24236/19-	Superseding military PIN M24236/19-	Superseded military PIN M24236/19-	Superseding military PIN M24236/19-
001	ABC	046	AND
002	ABD	047	APA
003	ACA	048	APB
004	ACB	049	APC
005	ACC	050	APD
006	ACD	051	AQA
007	ADA	052	AQB
008	ADB	053	AQC
009	ADC	054	AQD
010	ADD	055	ARA
011	AEA	056	ARB
012	AEB	057	ARC
013	AEC	058	ARD
014	AED	059	ASA
015	AFA	060	ASB
016	AFB	061	ASC
017	AFC	062	ASD
018	AFD	063	ATA
019	AGA	064	ATB
020	AGB	065	ATC
021	AGC	066	ATD
022	AGD	067	AUA
023	AHA	068	AUB
024	AHB	069	AUC
025	AHC	070	AUD
026	AHD	071	AVA
027	AJA	072	BBC
028	AJB	073	BBD
029	AJC	074	BCA
030	AJD	075	BCB
031	AKA	076	BCC
032	AKB	077	BCD
033	AKC	078	BDA
034	AKD	079	BDB
035	ALA	080	BDC
036	ALB	081	BDD
037	ALC	082	BEA
038	ALD	083	BEB
039	AMA	084	BEC
040	AMB	085	BED
041	AMC	086	BFA
042	AMD	087	BFB
043	ANA	088	BFC
044	ANB	089	BFD
045	ANC	090	BGA

TABLE V. Supersession data - Continued.

Superseded military PIN M24236/19-	Superseding military PIN M24236/19-	Superseded military PIN M24236/19-	Superseding military PIN M24236/19-
091	BGB	141	BUD
092	BGC	142	BVA
093	BGD	143	CBC
094	BHA	144	CBD
095	BHB	145	CCA
096	BHC	146	CCB
097	BHD	147	CCC
098	BJA	148	CCD
099	BJB	149	CDA
100	BJC	150	CDB
101	BJD	151	CDC
102	BKA	152	CDD
103	BKB	153	CEA
104	BKC	154	CEB
105	BKD	155	CEC
106	BLA	156	CED
107	BLB	157	CFA
108	BLC	158	CFB
109	BLD	159	CFC
110	BMA	160	CFD
111	BMB	161	CGA
112	BMC	162	CGB
113	BMD	163	CGC
114	BNA	164	CGD
115	BNB	165	CHA
116	BNC	166	CHB
117	BND	167	CHC
118	BPA	168	CHD
119	BPB	169	CJA
120	BPC	170	CJB
121	BPD	171	CJC
122	BQA	172	CJD
123	BQB	173	CKA
124	BQC	174	CKB
125	BQD	175	CKC
126	BRA	176	CKD
127	BRB	177	CLA
128	BRC	178	CLB
129	BRD	179	CLC
130	BSA	180	CLD
131	BSB	181	CMA
132	BSC	182	CMB
133	BSD	183	CMC
134	BTA	184	CMD
135	BTB	185	CNA
136	BTC	186	CNB
137	BTD	187	CNC
138	BUA	188	CND
139	BUB	189	CPA
140	BUC	190	CPB

TABLE V. Supersession data - Continued.

Superseded military PIN M24236/19-	Superseding military PIN M24236/19-	Superseded military PIN M24236/19-	Superseding military PIN M24236/19-
191	CPC	241	DJB
192	CPD	242	DJC
193	CQA	243	DJD
194	CQB	244	DKA
195	CQC	245	DKB
196	CQD	246	DKC
197	CRA	247	DKD
198	CRB	248	DLA
199	CRC	249	DLB
200	CRD	250	DLC
201	CSA	251	DLD
202	CSB	252	DMA
203	CSC	253	DMB
204	CSD	254	DMC
205	CTA	255	DMD
206	CTB	256	DNA
207	CTC	257	DNB
208	CTD	258	DNC
209	CUA	259	DND
210	CUB	260	DPA
211	CUC	261	DPB
212	CUD	262	DPC
213	CVA	263	DPD
214	DBC	264	DQA
215	DBD	265	DQB
216	DCA	266	DQC
217	DCB	267	DQD
218	DCC	268	DRA
219	DCD	269	DRB
220	DDA	270	DRC
221	DDB	271	DRD
222	DDC	272	DSA
223	DDD	273	DSB
224	DEA	274	DSC
225	DEB	275	DSD
226	DEC	276	DTA
227	DED	277	DTB
228	DFA	278	DTC
229	DFB	279	DTD
230	DFC	280	DUA
231	DFD	281	DUB
232	DGA	282	DUC
233	DGB	283	DUD
234	DGC	284	DVA
235	DGD	285	EBC
236	DHA	286	EBD
237	DHB	287	ECA
238	DHC	288	ECB
239	DHD	289	ECC
240	DJA	290	ECD

TABLE V. Supersession data - Continued.

Superseded military PIN M24236/19-	Superseding military PIN M24236/19-	Superseded military PIN M24236/19-	Superseding military PIN M24236/19-
291	EDA	341	ERC
292	EDB	342	ERD
293	EDC	343	ESA
294	EDD	344	ESB
295	EEA	345	ESC
296	EEB	346	ESD
297	EEC	347	ETA
298	EED	348	ETB
299	EFA	349	ETC
300	EFB	350	ETD
301	EFC	351	EUA
302	EFD	352	EUB
303	EGA	353	EUC
304	EGB	354	EUD
305	EGC	355	EVA
306	EGD	356	FBC
307	EHA	357	FBD
308	EHB	358	FCA
309	EHC	359	FCB
310	EHD	360	FCC
311	EJA	361	FCD
312	EJB	362	FDA
313	EJC	363	FDB
314	EJD	364	FDC
315	EKA	365	FDD
316	EKB	366	FEA
317	EKC	367	FEB
318	EKD	368	FEC
319	ELA	369	FED
320	ELB	370	FFA
321	ELC	371	FFB
322	ELD	372	FFC
323	EMA	373	FFD
324	EMB	374	FGA
325	EMC	375	FGB
326	EMD	376	FGC
327	ENA	377	FGD
328	ENB	378	FHA
329	ENC	379	FHB
330	END	380	FHC
331	EPA	381	FHD
332	EPB	382	FJA
333	EPC	383	FJB
334	EPD	384	FJC
335	EQA	385	FJD
336	EQB	386	FKA
337	EQC	387	FKB
338	EQD	388	FKC
339	ERA	389	FKD
340	ERB	390	FLA

TABLE V. Supersession data - Continued.

Superseded military PIN M24236/19-	Superseding military PIN M24236/19-	Superseded military PIN M24236/19-	Superseding military PIN M24236/19-
391	FLB	441	GFA
392	FLC	442	GFB
393	FLD	443	GFC
394	FMA	444	GFD
395	FMB	445	GGA
396	FMC	446	GGB
397	FMD	447	GGC
398	FNA	448	GGD
399	FNB	449	GHA
400	FNC	450	GHB
401	FND	451	GHC
402	FPA	452	GHD
403	FPB	453	GJA
404	FPC	454	GJB
405	FPD	455	GJC
406	FQA	456	GJD
407	FQB	457	GKA
408	FQC	458	GKB
409	FQD	459	GKC
410	FRA	460	GKD
411	FRB	461	GLA
412	FRC	462	GLB
413	FRD	463	GLC
414	FSA	464	GLD
415	FSB	465	GMA
416	FSC	466	GMB
417	FSD	467	GMC
418	FTA	468	GMD
419	FTB	469	GNA
420	FTC	470	GNB
421	FTD	471	GNC
422	FUA	472	GND
423	FUB	473	GPA
424	FUC	474	GPB
425	FUD	475	GPC
426	FVA	476	GPD
427	GBC	477	GQA
428	GBD	478	GQB
429	GCA	479	GQC
430	GCB	480	GQD
431	GCC	481	GRA
432	GCD	482	GRB
433	GDA	483	GRC
434	GDB	484	GRD
435	GDC	485	GSA
436	GDD	486	GSB
437	GEA	487	GSC
438	GEB	488	GSD
439	GEC	489	GTA
440	GED	490	GTB

TABLE V. Supersession data - Continued.

Superseded military PIN M24236/19-	Superseding military PIN M24236/19-	Superseded military PIN M24236/19-	Superseding military PIN M24236/19-
491	GTC	530	HKC
492	GTD	531	HKD
493	GUA	532	HLA
494	GUB	533	HLB
495	GUC	534	HLC
496	GUD	535	HLD
497	GVA	536	HMA
498	HBC	537	HMB
499	HBD	538	HMC
500	HCA	539	HMD
501	HCB	540	HNA
502	HCC	541	HNB
503	HCD	542	HNC
504	HDA	543	HND
505	HDB	544	HPA
506	HDC	545	HPB
507	HDD	546	HPC
508	HEA	547	HPD
509	HEB	548	HQA
510	HEC	549	HQB
511	HED	550	HQC
512	HFA	551	HQD
513	HFB	552	HRA
514	HFC	553	HRB
515	HFD	554	HRC
516	HGA	555	HRD
517	HGB	556	HSA
518	HGC	557	HSB
519	HGD	558	HSC
520	HHA	559	HSD
521	HHB	560	HTA
522	HHC	561	HTB
523	HHD	562	HTC
524	HJA	563	HTD
525	HJB	564	HUA
526	HJC	565	HUB
527	HJD	566	HUC
528	HKA	567	HUD
529	HKB	568	HVA

The margins of this specification are marked with vertical lines to indicate where modifications made. This was done as a convenience only and the Government assumes no liability whatsoever for any inaccuracies in these notations. Bidders and contractors are cautioned to evaluate the requirements of this document based on the entire content irrespective of the marginal notations.

Referenced documents:
MIL-PRF-24236

Custodians:
Army - CR
Navy - EC
Air Force - 85
DLA - CC

Review activities:
Army - AR, AT, AV, MI
Navy - AS, MC, OS, SH
Air Force – 99

Preparing activity:
DLA - CC

(Project 5930-2014-011)

NOTE: The activities listed above were interested in this document as of the date of this document. Since organizations and responsibilities can change, you should verify the currency of the information above using the ASSIST Online database at https://assist.dla.mil.