REV.	ECN NO.	DATE	SIGN	DESCRIPTION
B	C201784	2020/11/12	Ruru	B X3
C	C210235	2021/03/25	Ruru	C X2
D	C222002	2022/12/29	Ruru	D X1

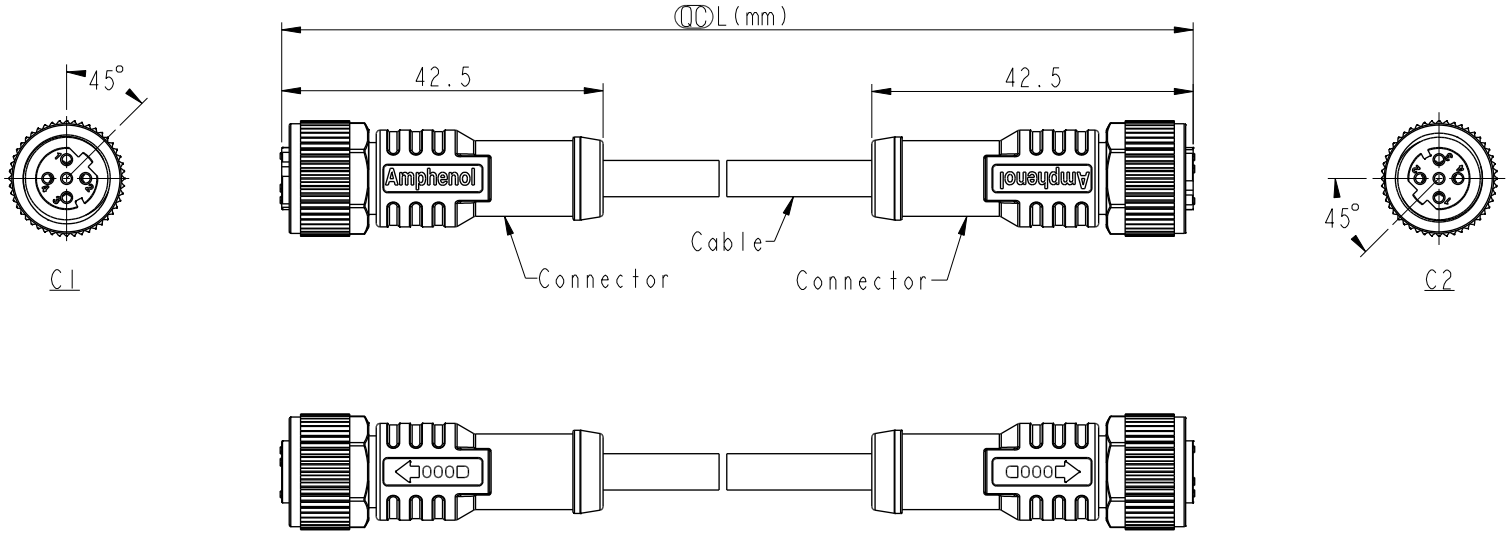

Pin Out	Pin #	Wire	
	5	--	
	4	Black	黑
	3	Blue	藍
	2	White	白
	1	Brown	棕

C1 & C2

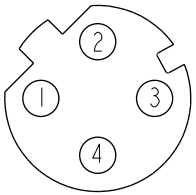

4P

Pin Assignments Front View

B
M12DXXFL-12DFL-SBXXX

XX: No. Of Pin

XXX: 0.5~99Meters
A05: 0.5 Meter
1: 01 Meter
2: 02 Meters
:
99: 99 Meters

Note: B C
* RoHS Compliant
* QC Important dimension
D * Waterproof rate: IP68, mated 1m/24h
IP69K, mated
* Connector:
Housing: Thermoplastic, Black
Pin: Copper alloy, Gold plated
O-Ring: Rubber, Green
Nut: Metal
Outer mold: Thermoplastic, Black
* Cable: UL20549, 22#*4C, OD=4.0mm, PUR Jacket, Black
* Cable length tolerance: 0.5M < L ≦ 1M: +60/-0 mm
1M < L ≦ 3M: +120/-0 mm
3M < L ≦ 5M: +160/-0 mm
5M < L ≦ 10M: ±100 mm
10M < L ≦ 20M: ±200 mm
20M < L ≦ 30M: ±300 mm
30M < L ≦ 99M: ±500 mm

UNIT: mm

TOLERANCE ± 0.5 mm

TITLE: ACC, SEN, D Code, DB-ENDED FF C			
SCALE 1:2	SIZE A4	SHEET 1 OF 1	
REV. D	WC-REV. A.5	QC: Inspection item	

Amphenol LTW
安費諾亮泰企業股份有限公司

ITEM NO	DRAWN BY Ruru	DATE 2018-12-11
DWG NO B M12DXXFL-12DFL-SBXXX	CHECKED BY Rita	DATE 2018-12-11
CUSTOMER ALTW	APPROVED BY Max	DATE 2018-12-11

THIS DOCUMENT IS SUBJECT TO CHANGE WITHOUT NOTICE. IT IS CONFIDENTIAL AND A PROPERTY OF Amphenol LTW. DISCLOSURE TO THIRD PARTY HAS TO BE AUTHORIZED BY Amphenol LTW.