# LCB G6SP

## Advanced Power TOPLED®

Advanced Power TOPLED features a compact package with a wide brightness range and high luminous efficiency.

## Applications

- Custom Tuning
- Interior Illumination (e.g. Ambient Map)

## Features:

- Package: white SMT package, colored diffused silicone resin
- Chip technology: ThinGaN
- Typ. Radiation: 120° (Lambertian emitter)
- Color: Cx = 0.2, Cy = 0.3 acc. to CIE 1931 (• color on demand blue)
- Optical efficacy: 46 lm/W
- Corrosion Robustness Class: 3B
- Qualifications: AEC-Q102 Qualified with RV-level 1
- ESD: 2 kV acc. to ANSI/ESDA/JEDEC JS-001 (HBM, Class 2)

## Ordering Information

| Type | Luminous Intensity [1)]<br>$I_F$ = 140 mA<br>$I_v$ | Ordering Code |
|---|---|---|
| LCB G6SP-DBFA-4J5L | 5.6 ... 14.0 cd | Q65111A0342 |

## Maximum Ratings

| Parameter | Symbol | | Values |
|---|---|---|---|
| Operating Temperature | $T_{op}$ | min.<br>max. | -40 °C<br>110 °C |
| Storage Temperature | $T_{stg}$ | min.<br>max. | -40 °C<br>110 °C |
| Junction Temperature | $T_j$ | max. | 125 °C |
| Junction Temperature for short time applications* | $T_j$ | max. | 150 °C |
| Forward Current<br>$T_S$ = 25 °C | $I_F$ | min.<br>max. | 30 mA<br>250 mA |
| Surge Current<br>t ≤ 10 µs; D = 0.005 ; $T_S$ = 25 °C | $I_{FS}$ | max. | 500 mA |
| ESD withstand voltage<br>acc. to ANSI/ESDA/JEDEC JS-001 (HBM, Class 2) | $V_{ESD}$ | | 2 kV |
| Reverse current [2)] | $I_R$ | max. | 200 mA |

* The median lifetime (L70/B50) for Tj = 150°C is 100h.

## Characteristics

$I_F$ = 140 mA; $T_S$ = 25 °C

| Parameter | Symbol | | Values |
|---|---|---|---|
| Chromaticity Coordinate [3] | Cx<br>Cy | typ.<br>typ. | 0.2<br>0.3 |
| Viewing angle at 50% $I_V$ | 2φ | typ. | 120 ° |
| Forward Voltage [4]<br>$I_F$ = 140 mA | $V_F$ | min.<br>typ.<br>max. | 2.90 V<br>3.30 V<br>4.10 V |
| Reverse voltage (ESD device) | $V_{R\ ESD}$ | min. | 45 V |
| Reverse voltage [2]<br>$I_R$ = 20 mA | $V_R$ | max. | 1.2 V |
| Real thermal resistance junction/solderpoint [5] | $R_{thJS\ real}$ | typ.<br>max. | 35 K / W<br>40 K / W |
| Electrical thermal resistance junction/solderpoint [5]<br>with efficiency $\eta_e$ = 28 % | $R_{thJS\ elec.}$ | typ.<br>max. | 25 K / W<br>29 K / W |

## Brightness Groups

| Group | Luminous Intensity [1] $I_F$ = 140 mA min. $I_v$ | Luminous Intensity [1] $I_F$ = 140 mA max. $I_v$ | Luminous Flux [6] $I_F$ = 140 mA typ. $\Phi_V$ |
|---|---|---|---|
| DB | 5.6 cd | 7.1 cd | 19.0 lm |
| EA | 7.1 cd | 9.0 cd | 24.2 lm |
| EB | 9.0 cd | 11.2 cd | 30.3 lm |
| FA | 11.2 cd | 14.0 cd | 37.8 lm |

## Chromaticity Coordinate Groups [3)]

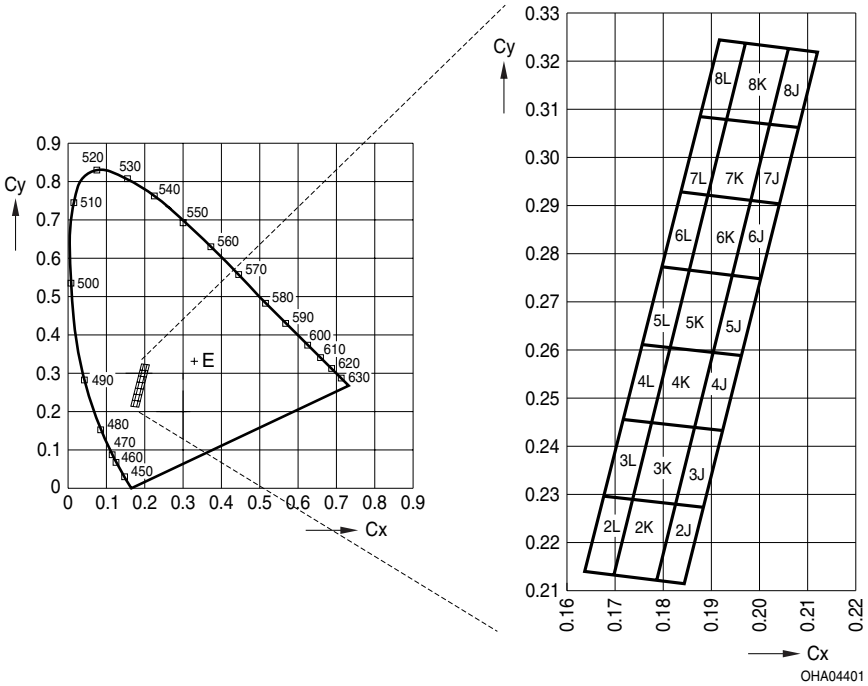


## Chromaticity Coordinate Groups [3)]

| Group | Cx | Cy |
|---|---|---|
| 4J | 0.1902 | 0.2595 |
| | 0.1960 | 0.2588 |
| | 0.1921 | 0.2431 |
| | 0.1862 | 0.2437 |
| 4K | 0.1814 | 0.2605 |
| | 0.1902 | 0.2595 |
| | 0.1862 | 0.2437 |
| | 0.1775 | 0.2447 |

| Group | Cx | Cy |
|---|---|---|
| 4L | 0.1756 | 0.2611 |
| | 0.1814 | 0.2605 |
| | 0.1775 | 0.2447 |
| | 0.1716 | 0.2454 |
| 5J | 0.1941 | 0.2753 |
| | 0.2000 | 0.2746 |
| | 0.1960 | 0.2588 |
| | 0.1902 | 0.2595 |

| Group | Cx | Cy |
|---|---|---|
| 5K | 0.1853 | 0.2762 |
| | 0.1941 | 0.2753 |
| | 0.1902 | 0.2595 |
| | 0.1814 | 0.2605 |
| 5L | 0.1795 | 0.2769 |
| | 0.1853 | 0.2762 |
| | 0.1814 | 0.2605 |
| | 0.1756 | 0.2611 |



OSRAM
Opto Semiconductors

## Group Name on Label

**Example: DB-4J**

| Brightness | Color Chromaticity |
|---|---|
| DB | 4J |

## Relative Spectral Emission [6)]

$I_{rel} = f(\lambda)$; $I_F = 140$ mA; $T_S = 25$ °C

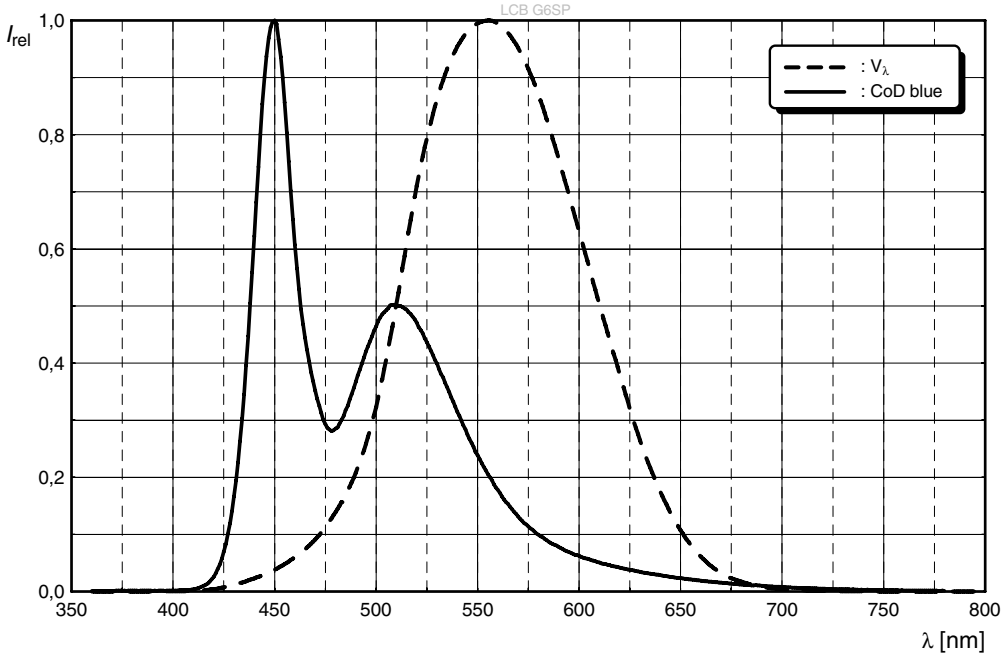


## Radiation Characteristics [6)]

$I_{rel} = f(\phi)$; $T_S = 25$ °C

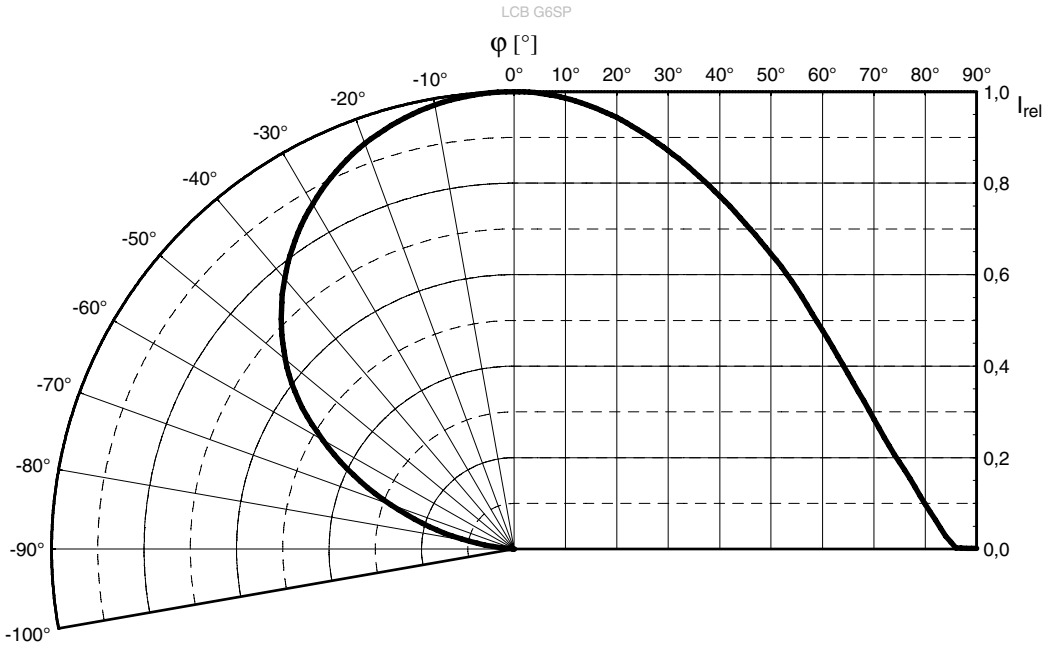




OSRAM
Opto Semiconductors

## Forward current [6), 7)]

$I_F = f(V_F)$; $T_S$ = 25 °C

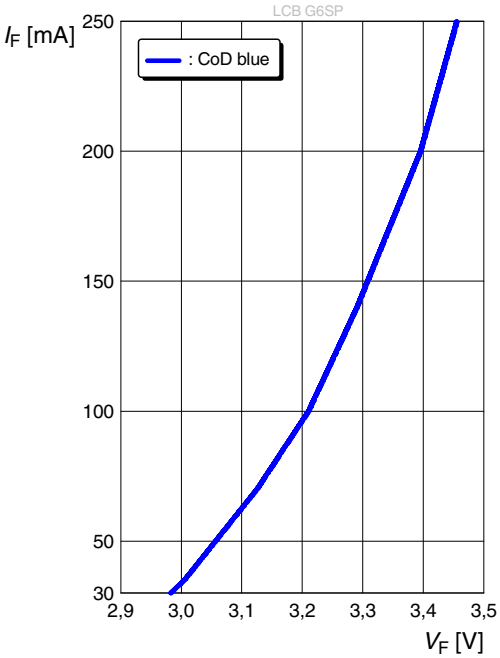


## Relative Luminous Intensity [6), 7)]

$I_v/I_v(140\ mA) = f(I_F)$; $T_S$ = 25 °C

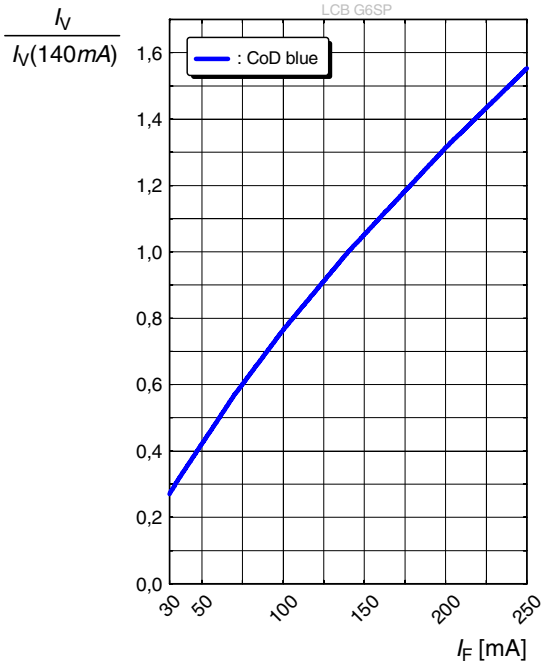


## Chromaticity Coordinate Shift [6)]

$\Delta Cx, \Delta Cy = f(I_F)$; $T_S$ = 25 °C

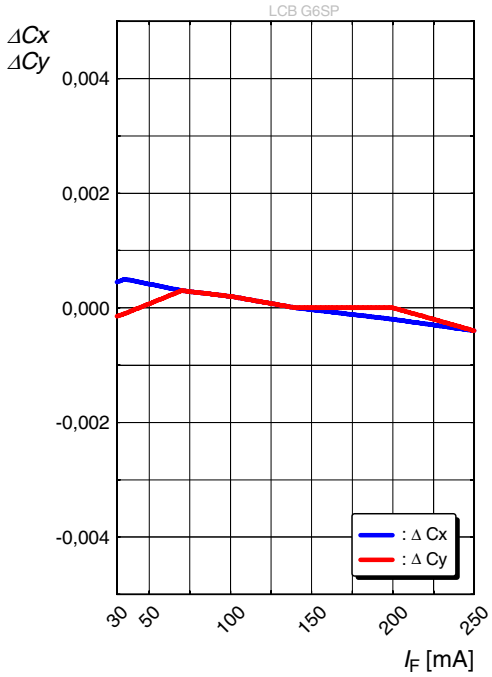




OSRAM
Opto Semiconductors

## Forward Voltage [6)]

$\Delta V_F = V_F - V_F(25\ °C) = f(T_j)$; $I_F = 140$ mA

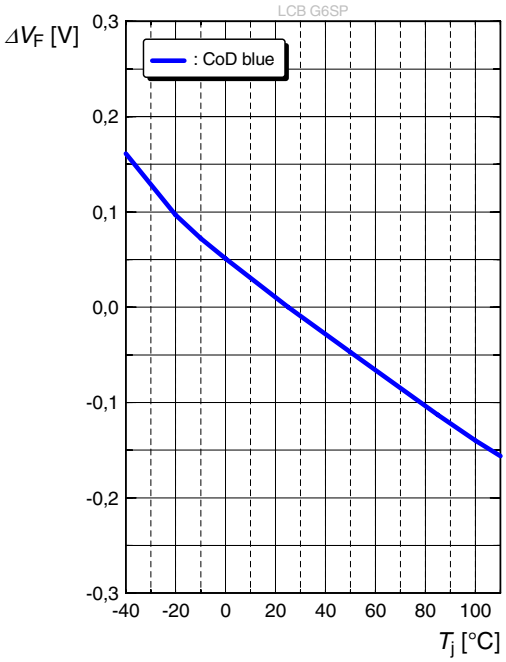


## Relative Luminous Intensity [6)]

$I_v/I_v(25\ °C) = f(T_j)$; $I_F = 140$ mA

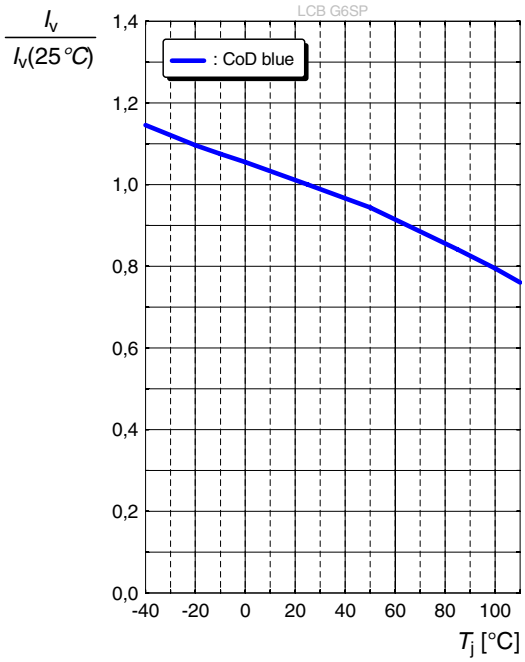


## Chromaticity Coordinate Shift [6)]

$\Delta Cx$, $\Delta Cy = f(T_j)$; $I_F = 140$ mA

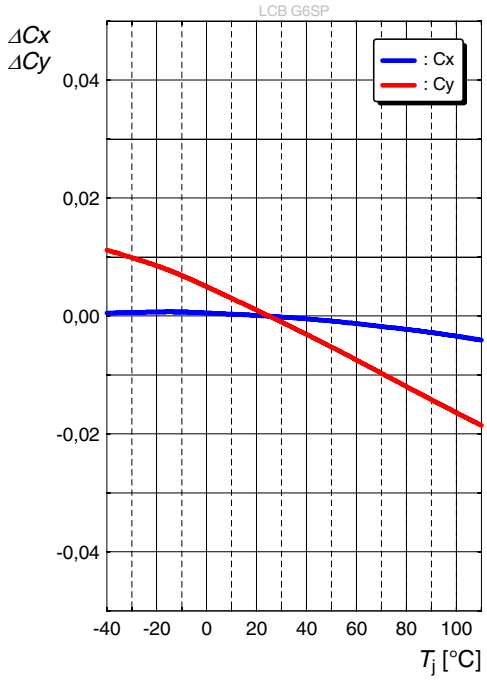




OSRAM
Opto Semiconductors

## Max. Permissible Forward Current

$I_F = f(T)$

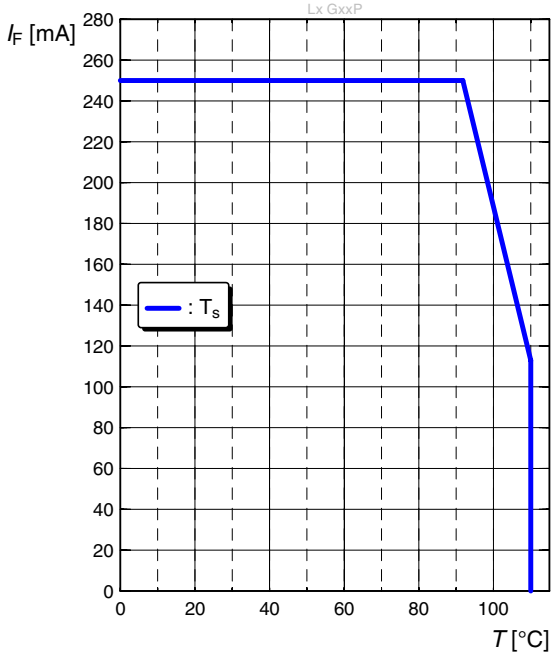


## Permissible Pulse Handling Capability

$I_F = f(t_p)$; D: Duty cycle

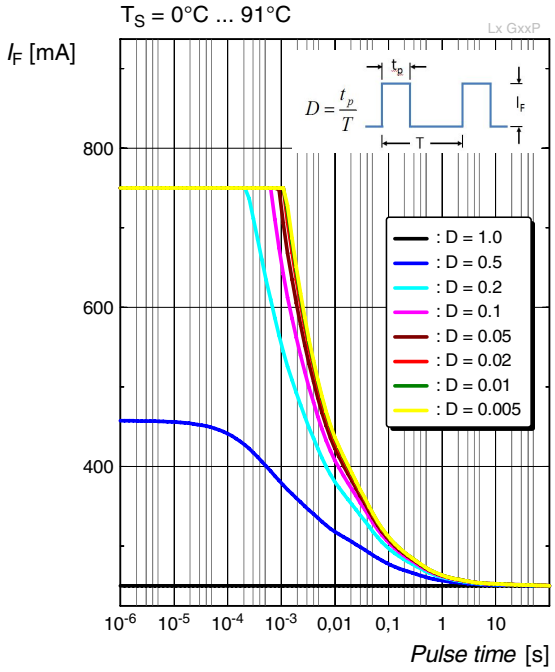


## Permissible Pulse Handling Capability

$I_F = f(t_p)$; D: Duty cycle

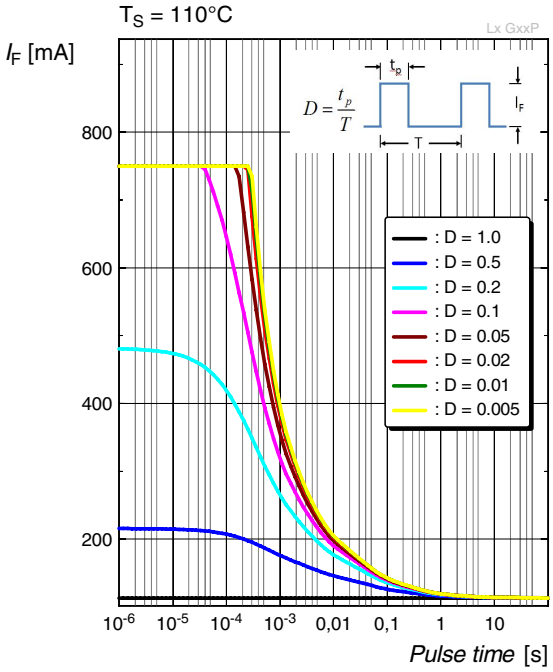




OSRAM
Opto Semiconductors

## Dimensional Drawing [8)]

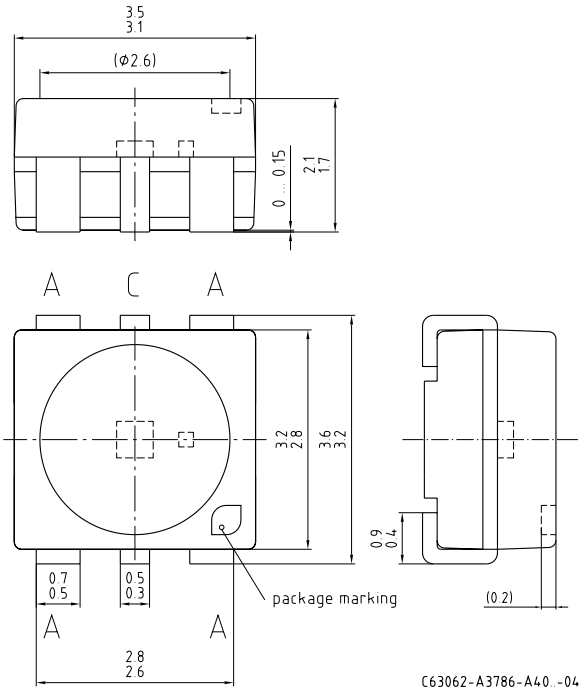


## Further Information:

| | |
|---|---|
| **Approximate Weight:** | 40.0 mg |
| **Package marking:** | Anode |
| **Corrosion test:** | Class: 3B<br>Test condition: 40°C / 90 % RH / 15 ppm $H_2S$ / 14 days (stricter than IEC 60068-2-43) |
| **ESD advice:** | The device is protected by ESD device which is connected in parallel to the Chip. |



OSRAM
Opto Semiconductors

## Recommended Solder Pad [8)]

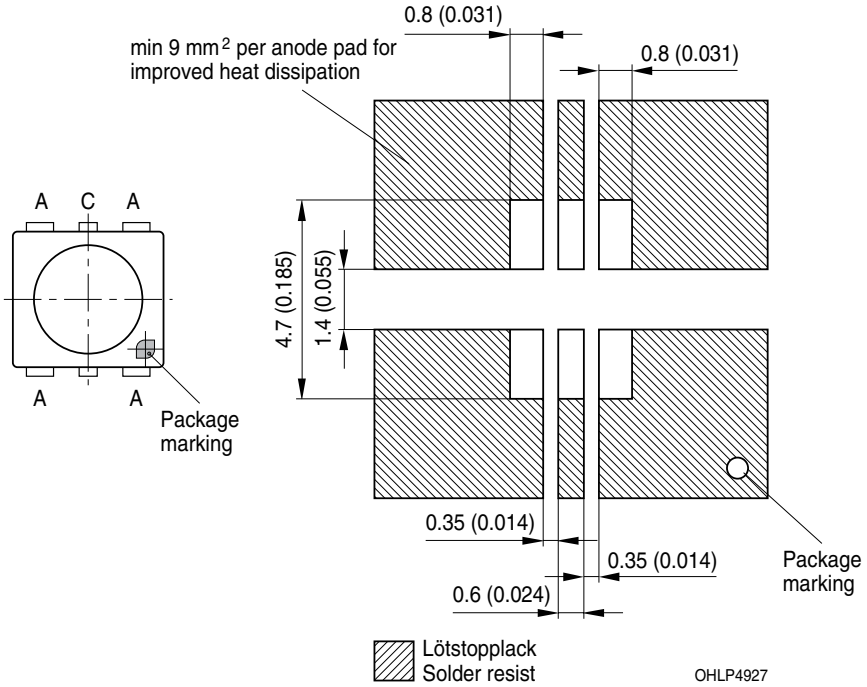


For superior solder joint connectivity results we recommend soldering under standard nitrogen atmosphere.

## Reflow Soldering Profile

Product complies to MSL Level 2 acc. to JEDEC J-STD-020E

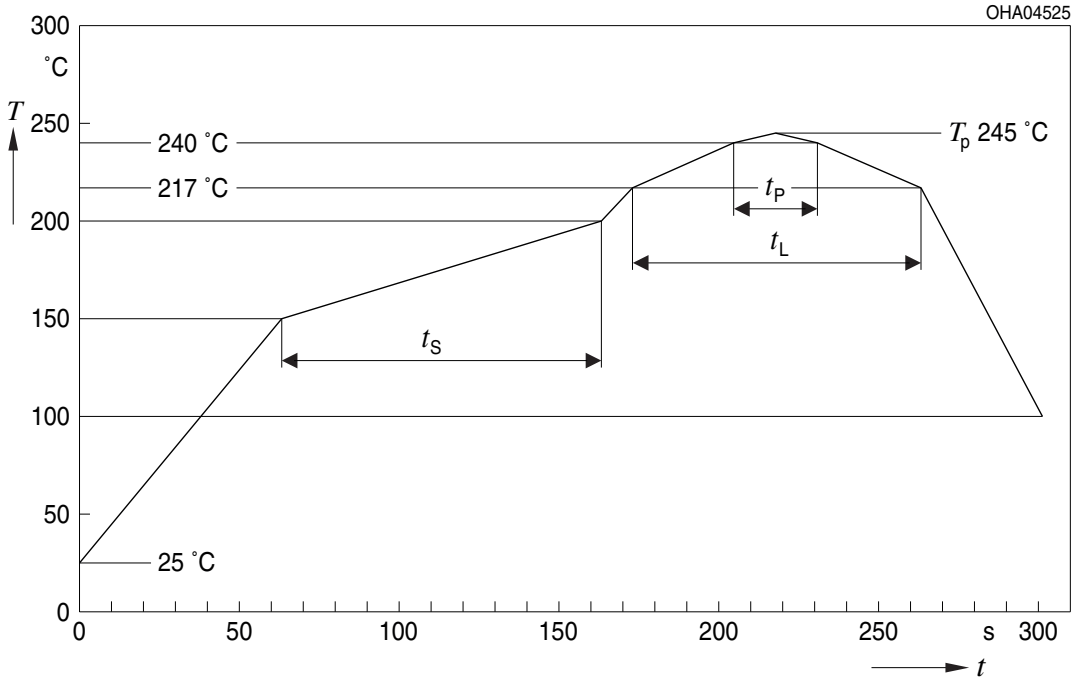


| Profile Feature | Symbol | Pb-Free (SnAgCu) Assembly | | | Unit |
|---|---|---|---|---|---|
| | | Minimum | Recommendation | Maximum | |
| Ramp-up rate to preheat*) 25 °C to 150 °C | | | 2 | 3 | K/s |
| Time $t_S$ $T_{Smin}$ to $T_{Smax}$ | $t_S$ | 60 | 100 | 120 | s |
| Ramp-up rate to peak*) $T_{Smax}$ to $T_P$ | | | 2 | 3 | K/s |
| Liquidus temperature | $T_L$ | | 217 | | °C |
| Time above liquidus temperature | $t_L$ | | 80 | 100 | s |
| Peak temperature | $T_P$ | | 245 | 260 | °C |
| Time within 5 °C of the specified peak temperature $T_P$ - 5 K | $t_P$ | 10 | 20 | 30 | s |
| Ramp-down rate* $T_P$ to 100 °C | | | 3 | 6 | K/s |
| Time 25 °C to $T_P$ | | | | 480 | s |

All temperatures refer to the center of the package, measured on the top of the component
* slope calculation DT/Dt: Dt max. 5 s; fulfillment for the whole T-range



OSRAM
Opto Semiconductors

## Taping [8)]

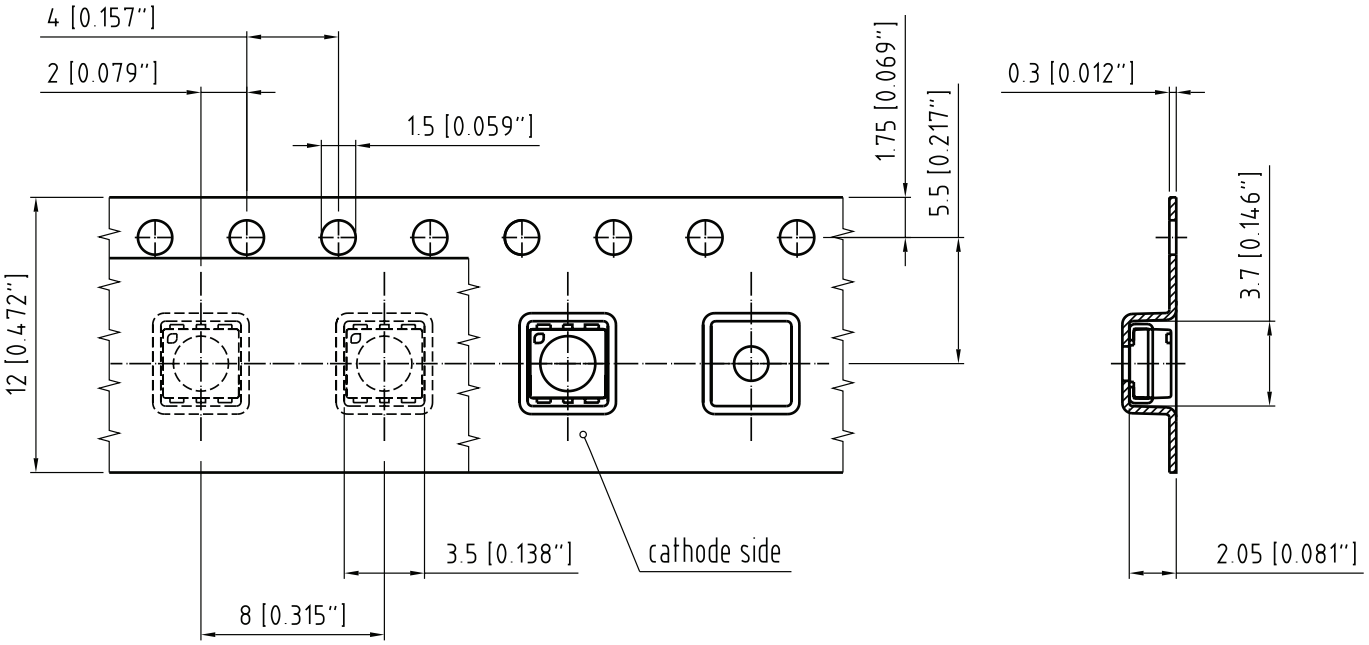


C63062-A3786-B9 -03

## Tape and Reel [9)]

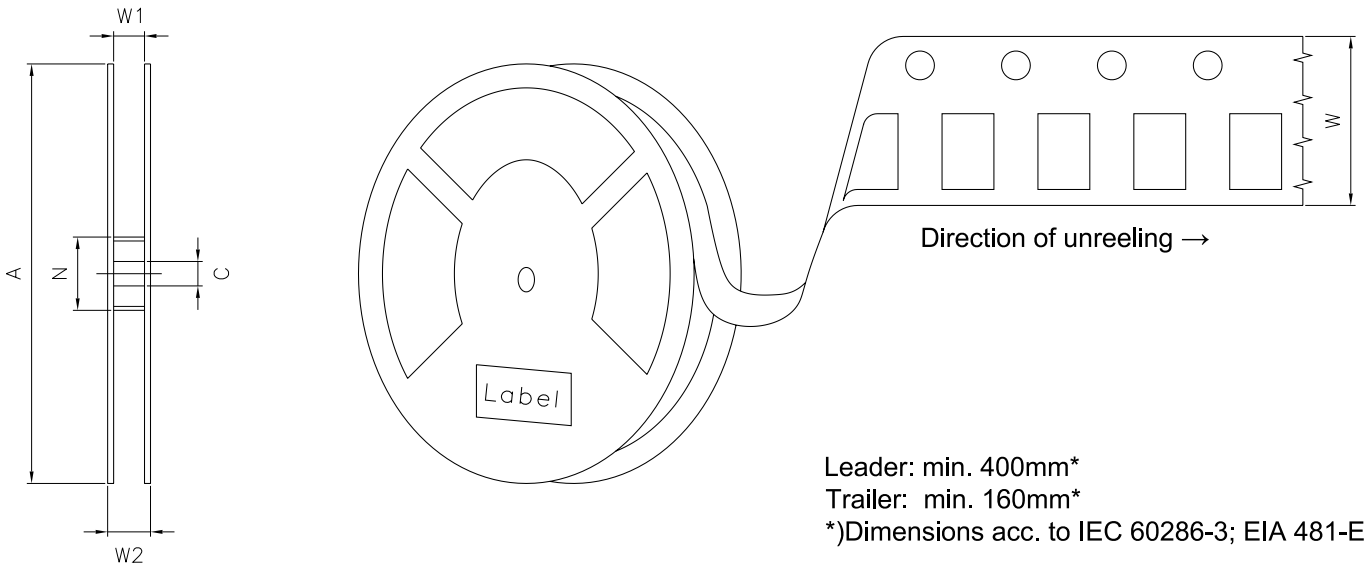


Leader: min. 400mm*
Trailer: min. 160mm*
*)Dimensions acc. to IEC 60286-3; EIA 481-E

## Reel Dimensions

| A | W | $N_{min}$ | $W_1$ | $W_{2\,max}$ | Pieces per PU |
|---|---|---|---|---|---|
| 180 mm | 12 + 0.3 / - 0.1 mm | 60 mm | 12.4 + 2 mm | 18.4 mm | 1000 |



OSRAM
Opto Semiconductors

## Barcode-Product-Label (BPL)

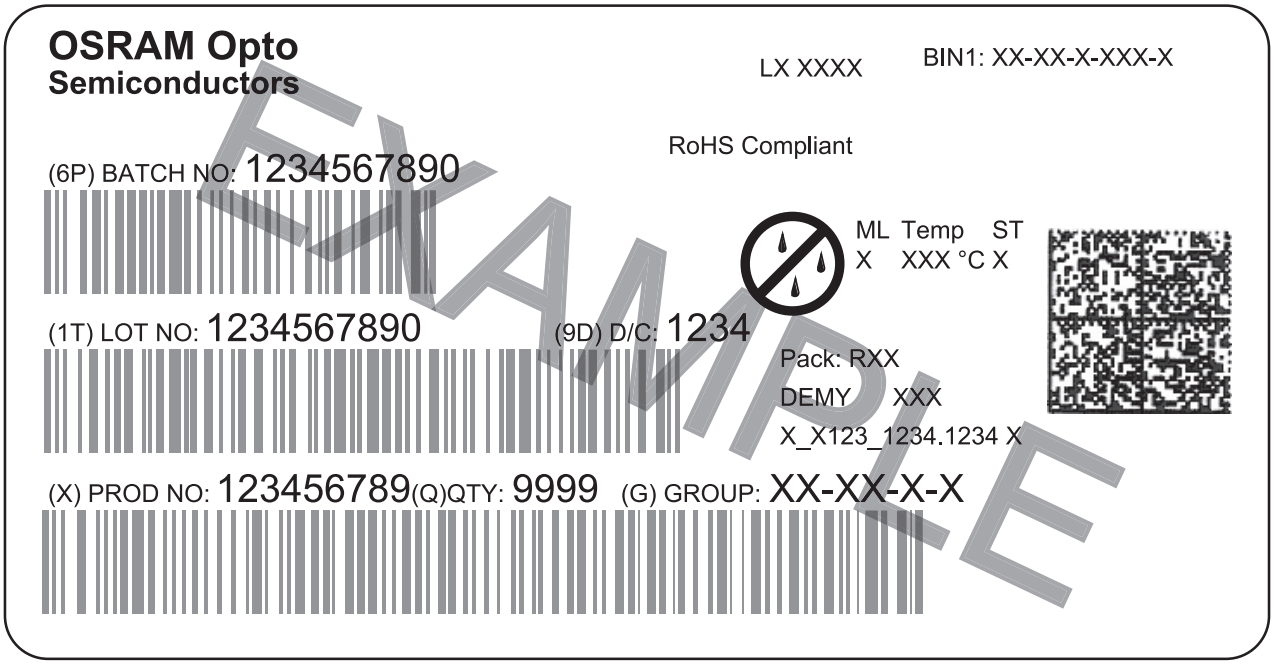


OHA04563

## Dry Packing Process and Materials [8)]

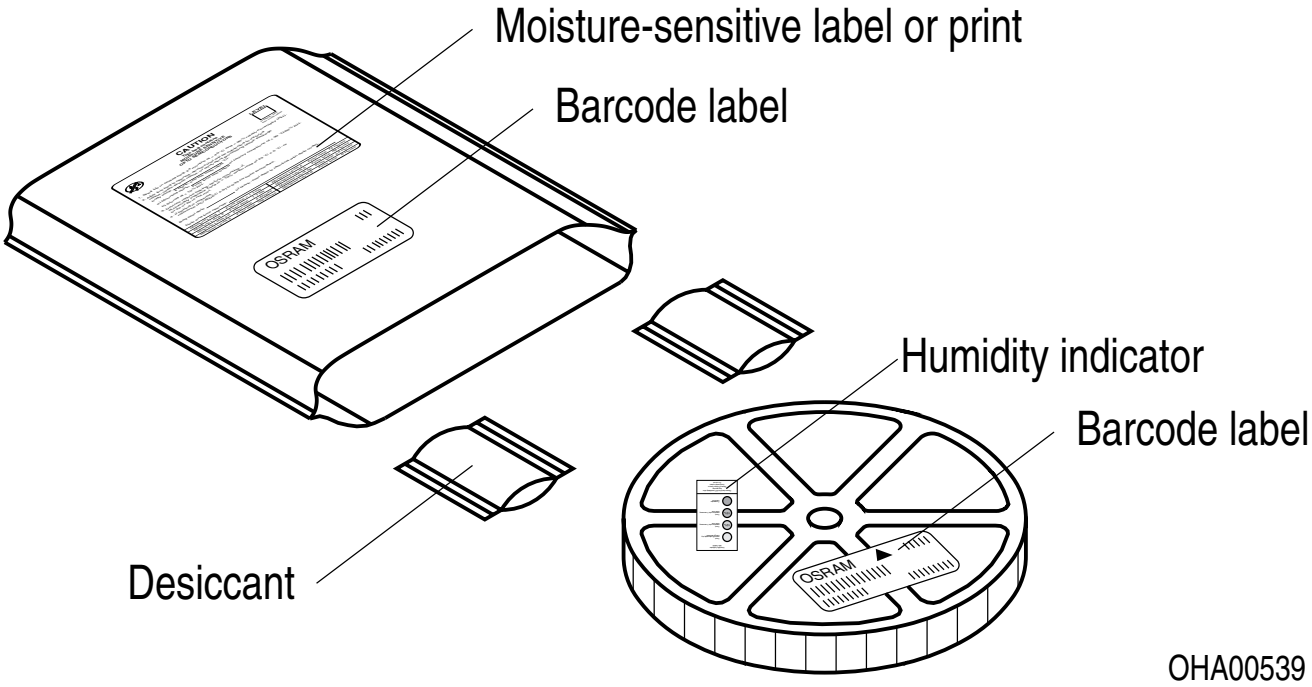


OHA00539

Moisture-sensitive product is packed in a dry bag containing desiccant and a humidity card according JEDEC-STD-033.

## Notes

The evaluation of eye safety occurs according to the standard IEC 62471:2006 (photo biological safety of lamps and lamp systems). Within the risk grouping system of this IEC standard, the device specified in this data sheet falls into the class **low risk (exposure time 100 s)**. Under real circumstances (for exposure time, conditions of the eye pupils, observation distance), it is assumed that no endangerment to the eye exists from these devices. As a matter of principle, however, it should be mentioned that intense light sources have a high secondary exposure potential due to their blinding effect. When looking at bright light sources (e.g. headlights), temporary reduction in visual acuity and afterimages can occur, leading to irritation, annoyance, visual impairment, and even accidents, depending on the situation.

Subcomponents of this device contain, in addition to other substances, metal filled materials including silver. Metal filled materials can be affected by environments that contain traces of aggressive substances. Therefore, we recommend that customers minimize device exposure to aggressive substances during storage, production, and use. Devices that showed visible discoloration when tested using the described tests above did show no performance deviations within failure limits during the stated test duration. Respective failure limits are described in the IEC60810.

For further application related information please visit www.osram-os.com/appnotes

## Disclaimer

**Attention please!**
The information describes the type of component and shall not be considered as assured characteristics. Terms of delivery and rights to change design reserved. Due to technical requirements components may contain dangerous substances.
For information on the types in question please contact our Sales Organization.
If printed or downloaded, please find the latest version on the OSRAM OS website.

**Packing**
Please use the recycling operators known to you. We can also help you – get in touch with your nearest sales office. By agreement we will take packing material back, if it is sorted. You must bear the costs of transport. For packing material that is returned to us unsorted or which we are not obliged to accept, we shall have to invoice you for any costs incurred.

**Product and functional safety devices/applications or medical devices/applications**
OSRAM OS components are not developed, constructed or tested for the application as safety relevant component or for the application in medical devices.
OSRAM OS products are not qualified at module and system level for such application.

In case buyer – or customer supplied by buyer – considers using OSRAM OS components in product safety devices/applications or medical devices/applications, buyer and/or customer has to inform the local sales partner of OSRAM OS immediately and OSRAM OS and buyer and /or customer will analyze and coordinate the customer-specific request between OSRAM OS and buyer and/or customer.

## Glossary

1) **Brightness:** Brightness values are measured during a current pulse of typically 25 ms, with an internal reproducibility of ±8 % and an expanded uncertainty of ±11 % (acc. to GUM with a coverage factor of k = 3).

2) **Reverse Operation:** This product is intended to be operated applying a forward current within the specified range. Applying any continuous reverse bias or forward bias below the voltage range of light emission shall be avoided because it may cause migration which can change the electro-optical characteristics or damage the LED.

3) **Chromaticity coordinate groups:** Chromaticity coordinates are measured during a current pulse of typically 25 ms, with an internal reproducibility of ±0.005 and an expanded uncertainty of ±0.01 (acc. to GUM with a coverage factor of k = 3).

4) **Forward Voltage:** The forward voltage is measured during a current pulse of typically 8 ms, with an internal reproducibility of ±0.05 V and an expanded uncertainty of ±0.1 V (acc. to GUM with a coverage factor of k = 3).

5) **Thermal Resistance:** Rth max is based on statistic values (6σ).

6) **Typical Values:** Due to the special conditions of the manufacturing processes of semiconductor devices, the typical data or calculated correlations of technical parameters can only reflect statistical figures. These do not necessarily correspond to the actual parameters of each single product, which could differ from the typical data and calculated correlations or the typical characteristic line. If requested, e.g. because of technical improvements, these typ. data will be changed without any further notice.

7) **Characteristic curve:** In the range where the line of the graph is broken, you must expect higher differences between single devices within one packing unit.

8) **Tolerance of Measure:** Unless otherwise noted in drawing, tolerances are specified with ±0.1 and dimensions are specified in mm.

9) **Tape and Reel:** All dimensions and tolerances are specified acc. IEC 60286-3 and specified in mm.

## Revision History

| Version | Date | Change |
|---|---|---|
| 1.2 | 2020-06-29 | Features<br>Schematic Transportation Box<br>Dimensions of Transportation Box<br>Notes<br>Disclaimer |

**Published by OSRAM Opto Semiconductors GmbH**
**Leibnizstraße 4, D-93055 Regensburg**
**www.osram-os.com** **© All Rights Reserved.**

EU RoHS and China RoHS compliant product

此产品符合欧盟 RoHS 指令的要求；
按照中国的相关法规和标准，不含有毒有害物质或元素。



OSRAM
Opto Semiconductors