L000423-07 ✔ ACTIVE

TE Internal #: L000423-07

Shark Fin Antenna, Multi Band, Vehicular, External Mount, Stud Mount, RP-SMA / SMA / TNC, Omnidirectional, Multiple Ports, 3 < 6 dBi Peak Gain

View on TE.com >

Antennas

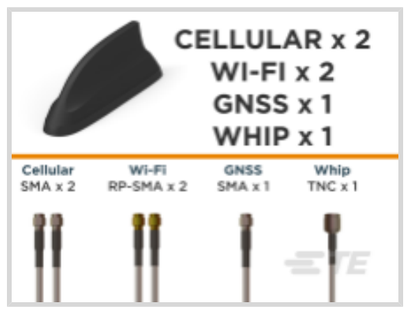



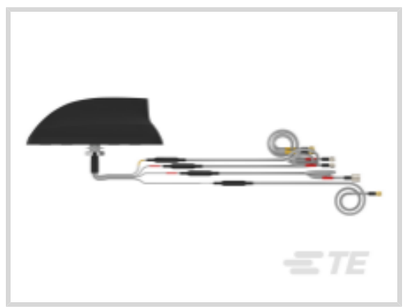


Communication Protocol: **Vehicular**

Mounting Location: **External**

Mounting Type: **Stud Mount**

Frequency Category: **617 – 7125**

Antenna Type: **Shark Fin**

Features

Product Type Features

Antenna Termination	RP-SMA, SMA, TNC
Antenna Product Type	Antenna

Configuration Features

Antenna Style	Shark Fin
Mounting Location	External
Antenna Type	Shark Fin
Band Type	Multi Band
Port Configuration	Multiple Ports

Electrical Characteristics

Impedance	50 Ω
Antenna Operation	Passive
VSWR (Max)	<3:1

Signal Characteristics

Frequency Band	617 – 960 MHz, 1427 – 1511 MHz, 1690 – 4000 MHz, 2400 – 2500 MHz, 4000 – 7200

	MHz, 4900 – 6000 MHz
Gain (Max)	2 dB, 3 dB, 3.3 dB, 3.7 dB, 4.6 dB, 4.8 dB
Frequency Category	617 – 7125
Peak Gain	3 < 6 dBi

Body Features

Antenna Weight	2300 g[59.9 oz]

Mechanical Attachment

Polarization	Linear
Mounting Type	Stud Mount

Dimensions

Product Width	63 mm[2.48 in]
Product Length	245 mm[9.64 in]
Product Height	84 mm[3.3 in]
Cable Length	5.3 m[17.4 ft]

Operation/Application

Antenna Environment	Outdoor
Wireless Standard	Cellular
Directionality	Omnidirectional

Industry Standards

IP Rating	IP67, IP69K
Communication Protocol	Vehicular
Primary Application	Vehicular

Product Availability

Applicable Region	Global

Packaging Features

Packaging Method	Carton

Other

Precision Level	Standard

Product Compliance

For compliance documentation, visit the product page on TE.com>

EU RoHS Directive 2011/65/EU	Compliant with Exemptions

EU ELV Directive 2000/53/EC	Not Yet Reviewed
China RoHS 2 Directive MIIT Order No 32, 2016	未针对中国 RoHS 符合性进行审核 Not reviewed for China RoHS compliance
EU REACH Regulation (EC) No. 1907/2006	Current ECHA Candidate List: JUNE 2025 (250) Candidate List Declared Against: JUNE 2025 (250) SVHC > Threshold: Pb (3.33% in Component) UV-329 (.4% in Component) **Article Safe Usage Statements:** Do not eat, drink or smoke when using this product. Wash thoroughly after handling. Do not handle until all safety precautions have been read and understood. Recycle if possible and dispose of the article by following all applicable governmental regulations relevant to your geographic location.
Halogen Content	Not Low Halogen - contains Br or Cl > 900 ppm.
Solder Process Capability	Not reviewed for solder process capability

Product Compliance Disclaimer

This information is provided based on reasonable inquiry of our suppliers and represents our current actual knowledge based on the information they provided. This information is subject to change. The part numbers that TE has identified as EU RoHS compliant have a maximum concentration of 0.1% by weight in homogenous materials for lead, hexavalent chromium, mercury, PBB, PBDE, DBP, BBP, DEHP, DIBP, and 0.01% for cadmium, or qualify for an exemption to these limits as defined in the Annexes of Directive 2011/65/EU (RoHS2). Finished electrical and electronic equipment products will be CE marked as required by Directive 2011/65/EU. Components may not be CE marked.Additionally, the part numbers that TE has identified as EU ELV compliant have a maximum concentration of 0.1% by weight in homogenous materials for lead, hexavalent chromium, and mercury, and 0.01% for cadmium, or qualify for an exemption to these limits as defined in the Annexes of Directive 2000/53/EC (ELV). Regarding the REACH Regulations, TE's information on SVHC in articles for this part number is still based on the European Chemical Agency (ECHA) 'Guidance on requirements for substances in articles'(Version: 2, April 2011), applying the 0.1% weight on weight concentration threshold at the finished product level. TE is aware of the European Court of Justice ruling of September 10th, 2015 also known as O5A (Once An Article Always An Article) stating that, in case of 'complex object', the threshold for a SVHC must be applied to both the product as a whole and simultaneously to each of the articles forming part of its composition. TE has evaluated this ruling based on the new ECHA "Guidance on requirements for substances in articles" (June 2017, version 4.0) and will be updating its statements accordingly.

Compatible Parts



TE Part # L000410-03
Monopole Whip,UHF,470-512MHz



TE Part # L000340-01
Vehicle Whip 150-175/450-512/735-960MHz



TE Part # L000410-04
Monopole Whip,UHF,740-960MHz



TE Part # L000410-01
Monopole Whip,TETRA UHF, 380-430MHz



TE Part # L000410-02
Monopole Whip,UHF,450-470MHz



TE Part # L000434-09
7-Port,4x 5G/LTE,2x WIFI,GNSS,WHT

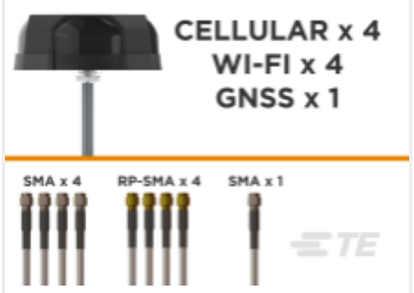

TE Part # L000434-01
9-Port,4x 5G/LTE,4x WIFI,GNSS,BLK

Customers Also Bought



TE Part #DT04-2P
REC, 2P, GRY, N



TE Part #DT06-2S
PLG, 2P, GRY, N



TE Part #CAT-D48-ST273
DEUTSCH Connector Solid Contacts



TE Part #CAT-D487-W416
Wedgelocks: DEUTSCH DT



TE Part #114017-ZZ
SEALING PLUG, SIZE 12/16, WHT

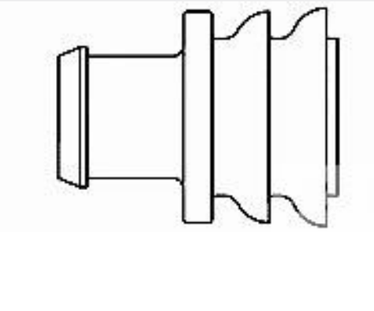

TE Part #281934-2
SINGLE WIRE SEAL



TE Part #CAT-AM71-CH8172
AMP SUPERSEAL 1.5MM, CONNECTOR HOUSING

Documents

Product Drawings

6-Port,2x 5G/LTE,2x WiFi,GNSS,Whip,BLK

English

CAD Files

Customer View Model

ENG_CVM_CVM_L000423-07_1.2d_dxf.zip

English

Customer View Model

ENG_CVM_CVM_L000423-07_1.3d_stp.zip

English

Customer View Model

ENG_CVM_CVM_L000423-07_1.3d_igs.zip

English

3D PDF

3D

By downloading the CAD file I accept and agree to the Terms and Conditions of use.

Datasheets & Catalog Pages

FP20 auto Datasheet and Kitting Guide

English

Product Specifications

Test Specification

English