cannon

KPT / KPSE / KPTC Connectors

In Accordance with VG95328



ITT

We Connect

When it matters most

For more than a century, ITT Cannon has developed innovative interconnect solutions for the world's harshest environments. With facilities in the United States, Germany, Italy, Mexico, China and Japan, each with its unique strengths, we offer our customers interconnect solutions that are truly Engineered for Life.

In addition to this truly global footprint, we offer highly specialized, segmented industry expertise. We have a proven track record as an industry leader in harsh-environment applications. This has equipped us with the knowledge needed to continue to produce the most resilient, reliable connectors for our customers' most challenging conditions.

Interconnect solutions for the harshest environments.

cannon

The ITT Cannon difference

- Global capabilities & local support
- Proven application expertise
- A century of interconnect leadership
- A committed innovator & business partner

About ITT

ITT is a diversified leading manufacturer of highly engineered critical components and customized technology solutions for the energy, transportation and industrial markets. Building on its heritage of innovation, ITT partners with its customers to deliver enduring solutions to the key industries that underpin our modern way of life. Founded in 1920, ITT is headquartered in White Plains, N.Y., with employees in more than 35 countries and sales in a total of approximately 125 countries. For more information, visit www.itt.com.

















Our connector portfolio remains the most extensive

in the industry, offering a reliable and cost effective range of interconnect solutions

Introduction to KPSE/KPT/KPTC

ITT Cannon's KPSE / KPT and KPTC series of miniature positive bayonet locking connectors offer a range of high-density signal solutions. They are designed according to MIL-DTL-26482 Series I or VG95328 – details below. Next to the original use in military vehicles these connector series have become a standard for Industrial uses as eg. off-road vehicles, sensors, factory equipment and other heavy industry applications.

All three product lines have specific characteristics and provide a set of unique variants, however, all lines are fully intermateable with each other as well as any other connector series designed to MIL-DTL 26482 Series I or VG95238 standards.

Product Series	Origin	VG 95328 Approved	MIL-DTL 26482 Series I Approved
KPSE	German make/origin	Yes	No
KPSE	US make/origin	No	No
KPT	German make/origin	No	No
KPT	US make/origin	No	No
KPTC	German make/origin	No	No

KPSE is the high-performance crimp contact solution featuring a clip-in retention system for fast and simple assembly. ITT Cannon is approved to offer this line with VG marking according to VG95328.

KPT is the first of two general duty series, and equipped with solder pot contacts and glued in contacts. This makes this product ideal for any prototype solution as well as for military vehicle applications based on the MIL-DTL-268482 Series I standard.

KPTC is the second ITT Cannon general duty series with either crimp or solder pot contact versions. In comparison this series comes with a simpler design and avoids the high-performance clip-in solution of KPSE as well as the glued contact assembly of KPT which makes this line a good choice for many Industrial applications.

Both KPTC as well as KPT add typical Industrial back shells to their portfolio.

Common features of KPSE / KPT / KPTC:

- Intermateability with all product lines designed to MIL-DTL-26482 Series I
- Environmental sealing to IP67 and IP68
- ½ turn positive bayonet coupling for quick mating & unmating
- Shielded backshell accessories
- A range of RoHS compliant plating alternatives to Cadmium including VG approved Tin Zinc, Nickel, Zinc Nickel and Zinc Cobalt versions
- Customizing options

This document solely applies to European manufactured KPT / KPSE / KPTC products.

Contact Principle

CONTACT & SEALING PRINCIPLE

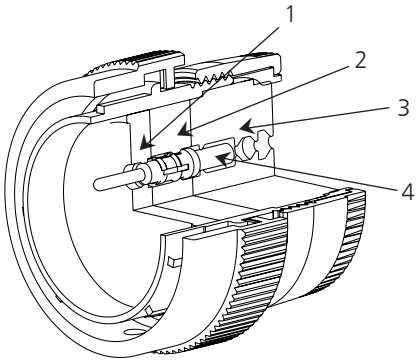

KPSE uses a three piece insulator stack up consisting of

1 - rubber insulator
2 - plastic wafer / retaining clips
3 - ubber grommet to seal individual wires
4 - two piece machined contact with retaining clip

Rubber insulator (1) and grommet (3) together with the front sealing ring provide the sealing in mated condition as well as the sealing of individual wires protruding through the grommet.

Contact retention is provided using a two piece contact with retaining clip. The stiff plastic wafer or individual metal clips provide the specified contact retention. A good tactile response is given when contacts are pushed in the final assembly position.

Contacts are installed from the rear by hand or with an insertion tool to ease assembly. Contact removal is done with an extraction tool from the front.

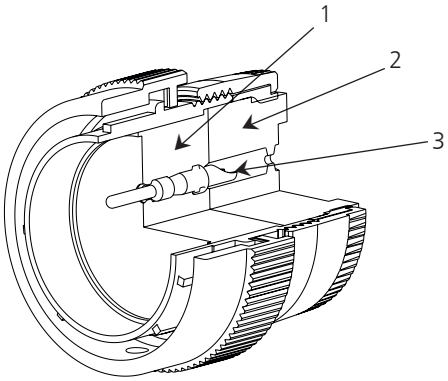

KPT uses a rubber insulator and sealing grommet

1 - rubber insulator
2 - rubber grommet to seal individual wires
3 - one piece machined contact
Rubber insulator (1) and grommet (2) together with the front sealing ring provide the sealing in mated condition as well as the sealing of individual wires protruding through the grommet.

Contact retention is provided by form fit of the machined contact in the rubber insulator. Additionally, glue is applied to secure contacts in the exact mounting position. KPT is equipped with solder pot contacts only and pre installed by the factory.

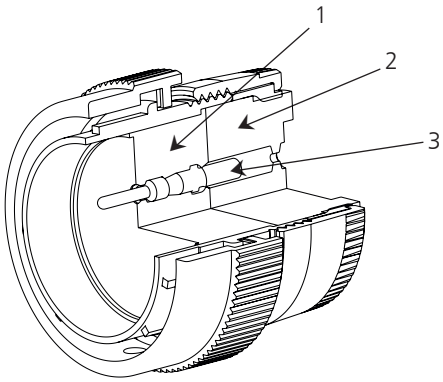

KPTC uses a rubber insulator and sealing grommet

1 - rubber insulator
2 - rubber grommet to seal individual wires
3 - one piece machined contact

Rubber insulator (1) and grommet (2) together with the front sealing ring provide the sealing in mated condition as well as the sealing of individual wires protruding through the grommet.

Contact retention is provided by form fit of the machined contact in the rubber insulator. Solder pot contacts are pre-installed by the factory, crimp contacts are delivered separately. Glue is not applied to KPTC connectors.

Contacts are installed from the rear with an insertion tool.
Contact removal is done with an extraction tool from the front.

Table of contents

Contact and sealing principle 5
How to use this catalogue 7
Product overview 8
Panel cutouts 10
Ordering reference 11
Contact arrangements 14
Alternate insert positions 17
Wall mounting receptacles 18
Cable connecting plugs 21
Box mounting receptacles 24
Thru-bulkhead receptacles 24
Straight plugs 25
Jam nut receptacles 29
Right angle plugs 31
Receptacles with PCB solder pins 33

Accessories and tooling

Protective caps 34
Dummy receptacle 36
Cross reference lists 36
Tools and accessories 38
Product safety information 41

How to use

This catalog is split in several sections that help you to

- get a general overview of all product lines (product overview)
- create a product part number step by step (ordering reference)
- get all required detail information (dimensions, product details)
- get all required support products (accessories, tooling)

The fastest way to find your product of choice is to follow these steps

1 **Select your product** using the "ordering reference" option

2 **Use the detail pages** to better understand the available options and choose the best solution for your needs

3 **Add accessories and tooling** as required on the related pages

4 **Use the contact information** on the back cover to contact us for further questions or to get advice on where you can purchase our products

Product overview KPSE (VG95328), KPT, KPTC

Electrical Data

Contact rating at 60°C:

Size	Rated current A	Test current A	Millivolt drop mV
20	7,5	7,5	Less than 50
16	13,0	13,0	Less than 50

Current rating vs. ambient temperature:

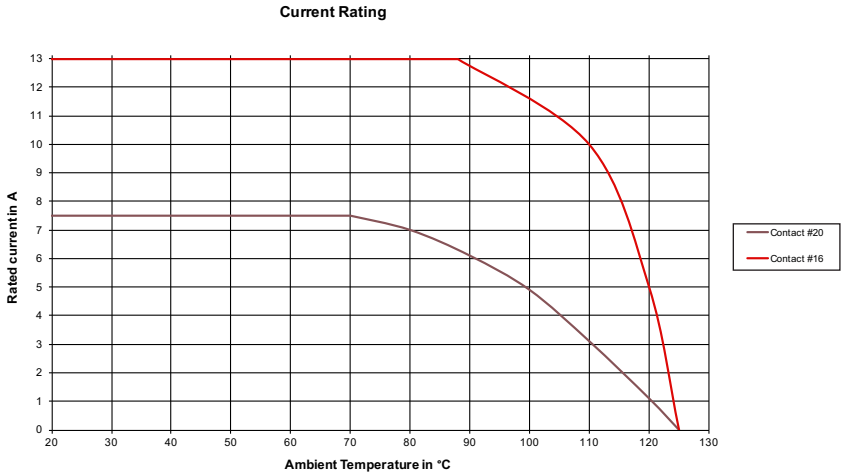

Comment for contact rating and current rating:

Rated current values shown are the max. current flowing continuously (not intermittently) through one contact pair with the same cross section with regard to ambient temperature. If multiple contact pairs are loaded into a connector the current rating curve has to be reduced.

Minimum air & creepage paths:

	Contact to contact crimp	Contact to contact solder	Contact to shell
Service Class 1	1,9 mm	0,75 mm	1,0 mm
Service Class 2	2,8 mm	1,53 mm	2,8 mm

Insulation resistance: ~ 5000 MOhm

Operating voltage:

Service class	VG95328	MIL-C-26482
1	140 VDC/100 VAC	850 VDC/600 VAC
2	165 VDC/115 VAC	1400 VDC/1000 VAC

Comment: When connectors in this catalog are used at voltages exceeding > 50VAC / 75VDC safety provisions as defined in the European low voltage directive 2014/35/EU have to be adhered to. For use in other regions see appropriate local regulations.

Test voltage:

Test voltage	Service class	Vrms	VDC
Service Class 1	1	1500	2100
	2	2300	3200
21336 M/70,000ft.	1	375	535
	2	550	770

Mechanical data

Ambient temperature: -55°C … 125°C

Environmental sealing:

In mated condition for KPSE, KPT and KPTC product lines:	IP67 acc. ISO 20653
VG95328 connectors:	IP68 (0,2bar / 48h) – see below
According to VG95319 Part 2, Test No. 5.9.2 | For styles A to E and Z1, Z2 and Z3 and gaskets style A only, test pressure 0,2 bar overpressure, test duartion 48h, test temperature 25±3°C, connector shall be free of moisture	

Vibration test acc. VG95328:

Vibration stress 150 m/s^2, 10 Hz to 2000 Hz
and Random vibration stress, 5 Hz to 500 Hz acc. test 5.52 VG95328-1

Mating cycles: 500

Material:

Shell	Aluminium alloy
Shell finishes	- Cadmium, VG approved - Tin Zinc, VG approved - ZnCobalt Black - Zinc Cobalt Green - Zinc Nickel Blue Generation, for non-shielded versions - Nickel
Insulator	Polychloroprene
Grommet and seals	
Contacts	Copper alloy, gold and silver plating

Product line design principles:

KPSE: Clip in crimp contact system, VG approved versions
KPT: Solder contacts, pre-installed and fixed with glue, VG approved versions
KPTC: Crimp contacts for tool insertion OR pre-installed solder contacts (not fixed with glue)

All further details, product line options etc. see following catalog pages

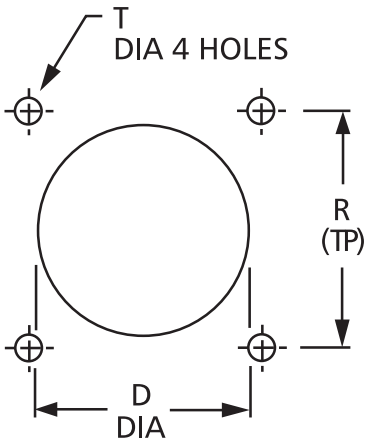

BOX MOUNTING RECEPTACLE

Shell size	For rear mounting	For front mounting		
	Ø D +0,25/0	Ø D +0,25/0	R ±0,15	Ø T +0,3
8	14,0	12,7	15,1	3,1
10	17,0	16,0	18,3	3,1
12	22,0	19,0	20,6	3,1
14	25,0	22,2	23,0	3,1
16	28,0	25,5	24,6	3,1
18	31,0	28,5	27,0	3,1
20	34,5	31,7	29,4	3,1
22	37,5	35,0	31,8	3,1
24	41,0	38,0	34,9	3,6

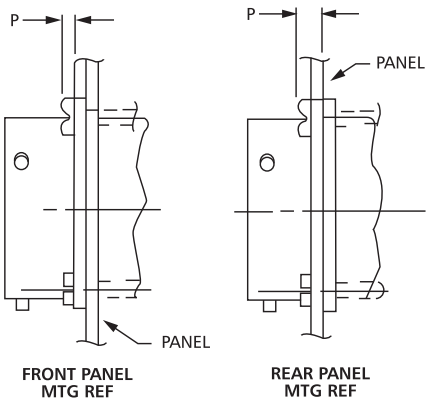

PANEL THICKNESS

Shell size	P – Panel thickness Height of screw head included
8	2,2
10	2,2
12	2,2
14	2,2
16	2,2
18	2,2
20	5,4
22	5,4
24	5,4

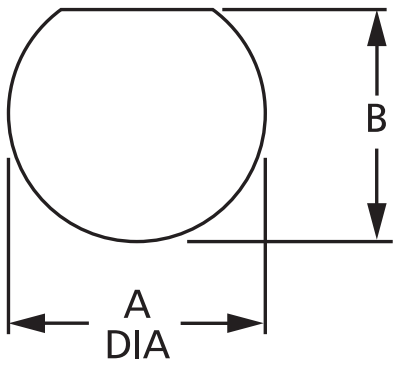

JAM NUT RECEPTACLE

Shell size	KPT/KPSE Ø A +0,25/–0	KPT/KPSE B +0/–0,12
8	14,5	13,6
10	17,7	16,8
12	22,7	20,9
14	25,7	24,1
16	28,8	27,2
18	32,0	30,4
20	35,1	33,6
22	38,4	36,8
24	41,5	40,0

How to order

Cannon Order reference

KPT / KPSE / KPTC

KP.. 02 E 22 – 36 P W *

Series
KPSE – Cannon prefix crimp, contacts supplied
KPT – Cannon prefix solder, contacts installed
KPTC – Cannon prefix commercial version, contacts to be ordered separately. See modification codes for contact options

Shell type (See note below)	
Cannon designation omit 0 in case of a mod code and KPTC	
00 – wall mounting receptacle	see page 18-20
01 – cable connecting plug	see page 21-23
02 – box mounting receptacle (class E only).	see page 24
06 – straight plug	see page 25-28
07 – jam nut receptacle	see page 29-31
08 – 90° angle plug	see page 31
KPTB - thru-bulkhead receptacle	see page 24

Class
A – Endbell with thread, no grommet seal; for jam nut: without endbell
E – Pressure nut and grommet seal - for 90° versions: endbell with thread, and grommet seal – with modification DN: Endbell for heat shrink boot and grommet seal – with modifiction DT: Banding adapter for heat shrink boot and grommet seal, shielded – with modification DZ: Endbell for heat shrink boot and grommet seal, shielded
F – Endbell with cable clamp and grommet seal
PG – endbell for PG glands
ME – endbell for metric glands

Shell size
8 – 24

Contact arrangement	see page 14-16

Contact type
P – pin
S – socket

Alternate insert position	
W, X, Y and Z (omit for normal position)	see page 17

Modification	see page 12

Note:
* If a modification is used the initial ‚0' in the shell style description is omitted e.g. KPT01E10-6P is changed to KPT1E10-6P-DN.
KPTC series does not use the initial ‚0' e.g. KPTC6E10-6P-C.

Dimensions shown in mm | Specifications and dimensions subject to change
This document solely applies to European manufactured KPT / KPSE / KPTC products

Modification Codes

KPT:

Multiple codes can be used in order of listing below:

Contact	
PCB solder pin 0,76 x 7mm (style 02 and 07 only)	EX
PCB solder pin 0,6 x 7mm (style 02 and 07 only)	EW

Endbell	
heat shrink boot adapter, grommet seal	DN
Banding adapter for heat shrink boot and grommet seal, shielded	DT
shielded, heat shrink boot adapter, grommet seal	DZ
without endbell, grommet and ferrule	F42*

Endbell for PG cable gland, class PG only	
PG09 thread for connectors with shell size 10	P9
PG11 thread for connectors with shell size 12	P11
PG13,5 thread for connectors with shell size 14	P13,5
PG16 thread for connectors with shell size 16	P16
PG21 thread for connectors with shell size 18, 20, 22	P21
PG29 thread for connectors with shell size 24	P29

Endbell for Metric cable gland, class ME only	
M12 thread for connectors with shell size 10	M12
M16 thread for connectors with shell size 12	M16
M20 thread for connectors with shell size 16	M20
M25 thread for connectors with shell size 18, 20	M25
M32 thread for connectors with shell size 22, 24	M32

Plating (Cadmium with olive drab chromate plating is standard - without code; Alternative platings below)	
Tin Zinc Matt Grey plating (VG approved / RoHS compliant)	A241
Zinc Cobalt, black plating (RoHS compliant)	A232
Zinc Nickel plating (RoHS compliant)	A240
Zinc Cobalt, green plating (RoHS compliant)	A233
Nickel plating (RoHS compliant)	A34

An example using these modifications:
KPT2E10-6P-EW-A232

* Note: Modification -F42 can only be used with Styles 0, 1, 6, 7 and 8. See details on pg 13

KPSE:

Multiple codes can be used in order of listing below:

Endbell	
heat shrink boot adapter, grommet seal	DN
Banding adapter for heat shrink boot and grommet seal, shielded	DT
shielded, heat shrink boot adapter, grommet seal	DZ
without endbell, grommet and ferrule	F42*

Endbell for PG cable gland, class PG only	
PG09 thread for connectors with shell size 10	P9
PG11 thread for connectors with shell size 12	P11
PG13,5 thread for connectors with shell size 14	P13,5
PG16 thread for connectors with shell size 16	P16
PG21 thread for connectors with shell size 18, 20, 22	P21
PG29 thread for connectors with shell size 24	P29

Endbell for Metric cable gland, class ME only	
M12 thread for connectors with shell size 10	M12
M16 thread for connectors with shell size 12	M16
M20 thread for connectors with shell size 16	M20
M25 thread for connectors with shell size 18, 20	M25
M32 thread for connectors with shell size 22, 24	M32

Plating (Cadmium with olive drab chromate plating is standard - without code; Alternative platings below)	
Tin Zinc Matt Grey plating (VG approved / RoHS compliant)	A241
Zinc Cobalt, black plating (RoHS compliant)	A232
Zinc Nickel plating (RoHS compliant)	A240
Zinc Cobalt, green plating (RoHS compliant)	A233
Nickel plating (RoHS compliant)	A34

Contact	
Connector without contacts	F0

An example using these modifications:
KPSE7F16-8S-A240-F0

* Note: Modification -F42 can only be used with Styles 0, 1, 6, 7 and 8. See details on pg 13

KPTC:

Multiple codes can be used in order of listing below:

Plating	
Nickel plating (RoHS compliant)	C
Tin Zinc Matt Grey plating (VG approved / RoHS compliant)	G
Zinc Cobalt black plating (RoHS compliant)	R
Zinc Cobalt green plating (RoHS compliant)	F
Zinc Nickel plating (RoHS compliant)	H
Cadmium with olive drab chromate	D

Endbell	
heat shrink boot adapter, grommet seal	DN
Banding adapter for heat shrink boot and grommet seal, shielded	DT
shielded, heat shrink boot adapter, grommet seal	DZ
without endbell, grommet and ferrule	F42*

Endbell for PG cable gland, class PG only	
PG09 thread for connectors with shell size 10	P9
PG11 thread for connectors with shell size 12	P11
PG13,5 thread for connectors with shell size 14	P13,5
PG16 thread for connectors with shell size 16	P16
PG21 thread for connectors with shell size 18, 20, 22	P21
PG29 thread for connectors with shell size 24	P29

Endbell for Metric cable gland, class ME only	
M12 thread for connectors with shell size 10	M12
M16 thread for connectors with shell size 12	M16
M20 thread for connectors with shell size 16	M20
M25 thread for connectors with shell size 18, 20	M25
M32 thread for connectors with shell size 22, 24	M32

Contact	
Connector supplied with solder pot contacts installed	MA
Connector supplied with crimp contacts	MB
PCB solder pin 0,76 x 7mm (style 02 and 07 only)	EX
PCB solder pin 0,6 x 7mm (style 02 and 07 only)	EW

An example using these modifications:
KPTC6F14-18P-H-MB

* Note: Modification -F42 can only be used with Styles 0, 1, 6, 7 and 8. See details on pg 13

Endbell Modification -F42

Below table shows the different threads that come with the respective shell sizes when choosing the modification -F42 (no endbell/grommet seal). This modification is only applicable to styles 0 (wall mounting receptacle), 1 (cable connecting plug), 6 (straight plug), 7 (jam nut receptacle) and 8 (90° angle plug). The only exception being KP*7A, as this combination already has no endbell/grommet.

Shell size	Thread
8	7/16-28UNEF
10	9/16-24UNEF
12	11/16-24UNEF
14	13/16-20UNEF
16	15/16-20UNEF
18	1-1/16-18UNEF
20	1-3/16-18UNEF
22	1-5/16-18UNEF
24	1-7/16-18UNEF

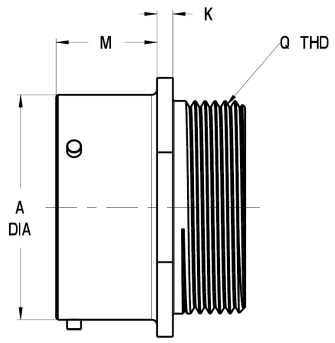

Drawing shows KP*1 Style

How to order

VG Order reference

VG95328 A 18-1 S N 1 J

Specification

Shell type see page 36
A – wall mounting receptacle with straight endbell
B – wall mounting receptacle with cable clamp
C – box mounting receptacle
D – jam nut receptacle
E – jam nut receptacle with cable clamp
J – straight plug with adapter DN
K – straight plug with cable clamp
M – straight plug, version DZ
R – wall mounting receptacle, version DZ
S – jam nut receptacle with adapter DN

Shell size 8, 10, 12, 14, 16, 18, 20, 22 and 24

Contact arrangements see page 14-16

Contact type P – pin S – socket

Alternate insert position see page 17

With / without contacts
Without identification = with contacts
With -1 identification = without contacts

Plating
Without identification = Cadmium, VG approved
Identification 'J' = RoHS, Matt Grey SnZn plating, VG approved

Dimensions shown in mm | Specifications and dimensions subject to change
This document solely applies to European manufactured KPT / KPSE / KPTC products

ITT

CONTACT ARRANGEMENTS

View on mating face of pin insulator	No. of contacts	Contact arrangements Contact size AWG	Service rating	Insulator position			
				W	X	Y	Z
	2	**8-2** ▲△ 20	1	58	122	–	–
	3	**8-3** ▲△ 20	1	60	210	–	–
	3	**8-3A** △•◊ 20	1	60	–	–	–
	3	**8-33** ▲◊△ 20	1	90	–	–	–
	4	**8-4** ▲△ 20	1	45	–	–	–
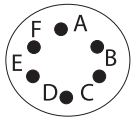	6	**10-6** ▲•△◊ 20	1	90	–	–	–
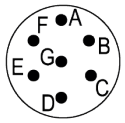	7	**10-7** ▲△ 20	1	90	–	–	–
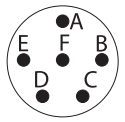	6	**10-98** ▲△ 20	1	90	180	240	270
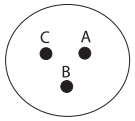	3	**12-3** ▲•△◊ 16	2	–	–	180	–
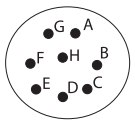	8	**12-8** ▲△ 20	1	90	112	203	292
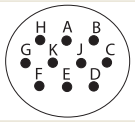	10	**12-10** ▲•△◊ 20	1	60	155	270	295
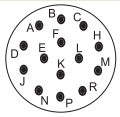	14	**12-14** ▲△ 20	1	60	155	270	295
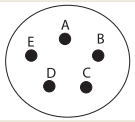	5	**14-5** ▲•△◊ 16	2	40	92	184	273
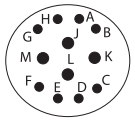	12	**14-12** ▲•△◊ 20 (8) 16 (4)	1	43	90	–	–

Legend ▲KPT ◊KPSE △KPTC •authorized per VG95328

CONTACT ARRANGEMENTS

View on mating face of pin insulator	No. of contacts	Contact arrangements Contact size AWG	Service rating	Insulator position			
				W	X	Y	Z
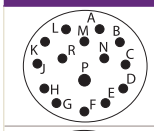	15	**14-15** ▲•△◊ 20 (14) 16 (1)	1	17	110	155	234
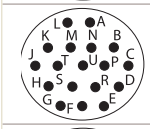	18	**14-18** ▲△ 20	1	15	90	180	270
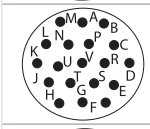	19	**14-19** ▲•△◊ 20	1	30	165	315	–
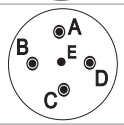	5	**14-22** ◊ 12 (4) 20 (1)	1	–	–	–	–
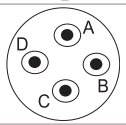	4	**14A4** ▲ Coax RG 188 U (not for receptacle shell style 02)	1	–	–	–	–
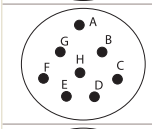	8	**16-8** ▲•△◊ 16	2	54	152	180	331
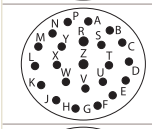	23	**16-23** ▲•△◊ 20 (22) 16 (1)	1	158	–	–	–
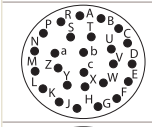	26	**16-26** ▲•△◊ 20	1	60	–	275	338
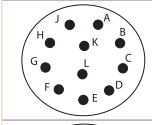	11	**18-11** ▲•△◊ 16	2	62	119	241	340
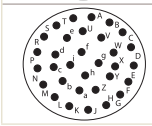	32	**18-32** ▲•△◊ 20	2	85	138	222	265

Legend ▲KPT ◊KPSE △KPTC •authorized per VG95328

CONTACT ARRANGEMENTS

View on mating face of pin insulator	No. of contacts	Contact arrangements Contact size AWG	Service rating	Insulator position			
				W	X	Y	Z
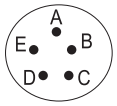	5	**20A6** ◊ 12 Note: contacts are 1 grounding pin and 4 standard size 12 pins	2	90	180	270	–
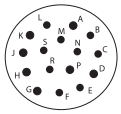	16	**20-16** ▲•△◊ 16	2	238	318	333	347
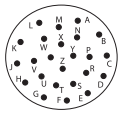	24	**20-24** ▲△ 20	1	70	145	215	290
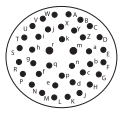	39	**20-39** ▲•△◊ 20(37) 16(2)	1	63	144	252	333
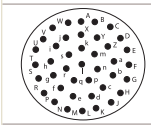	41	**20-41** ▲•△◊ 20	1	45	126	225	w–
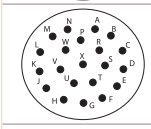	21	**22-21** ▲•△◊ 16	2	16	135	175	349
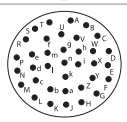	36	**22-36** ▲△ 20	1	72	144	216	288
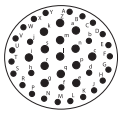	41	**22-41** ▲△ 20(27) 16(14)	1 2	39	135	264	–
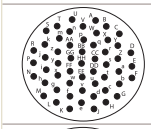	55	**22-55** ▲•△◊ 20	1	30	142	226	314
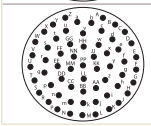	61	**24-61** ▲•△◊ 20	1	90	180	270	324

Legend ▲KPT ◊KPSE △KPTC •authorized per VG95328

ALTERNATE INSERT POSITION

The diagram indicates alternate insert positions.
The six positions N, V, W, Y, Z differ in degree of rotation for various sizes and arrangements. For the exact degree of rotation, for the list of contact arrangements and for alternate positions available, refer to the table at the right.

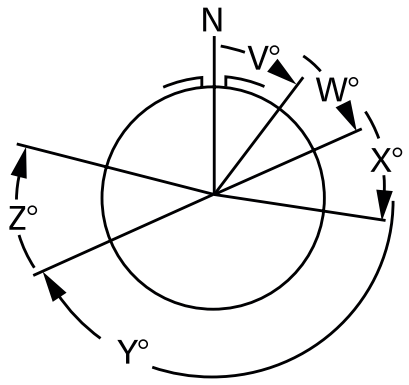

Shell size	No. of contacts	Contact arrangements	Degree of Rotation				
			V	W	X	Y	Z
8	2	8-2	–	58	122	–	–
	3	8-3	–	60	210	–	–
	3	8-3A	–	60	–	–	–
	3	8-33	–	90	–	–	–
	4	8-4	–	45	–	–	–
10	6	10-6	–	90	–	–	–
	7	10-7	–	90	–	–	–
	6	10-98	–	90	180	240	270
12	3	12-3	–	–	–	180	–
	8	12-8	–	90	112	203	292
	10	12-10	–	60	155	270	295
	14	12-14	–	60	155	270	295
14	4	14A4	–	–	–	–	–
	5	14-5	–	40	92	184	273
	12	14-12	–	43	90	–	–
	15	14-15	–	17	110	155	234
	18	14-18	–	15	90	180	270
	19	14-19	–	30	165	315	–
	5	14-22	–	–	–	–	–
16	8	16-8	–	54	52	180	331
	23	16-23	–	158	–	–	–
	26	16-26	–	60	–	275	338
18	11	18-11	–	62	119	241	340
	32	18-32	–	85	138	222	265
20	5	20A6*	–	90	180	270	–
	16	20-16	–	238	318	333	347
	24	20-24	–	70	145	215	290
	39	20-39	–	63	144	252	333
	41	20-41	–	45	126	225	–
22	21	22-21	–	16	135	175	349
	36	22-36	–	72	144	216	288
	41	22-41	–	39	135	264	–
	55	22-55	–	30	142	226	314
24	61	24-61	–	90	180	270	324

*** This contact arrangement features five contacts size 12. Four standard contacts and one is a first-to-mate contact.**

WALL MOUNTING RECEPTACLES KPT00A / KPSE00A / KPTC0A

Description: Wall Mounting Receptacle with an endbell with thread, no grommet seal.

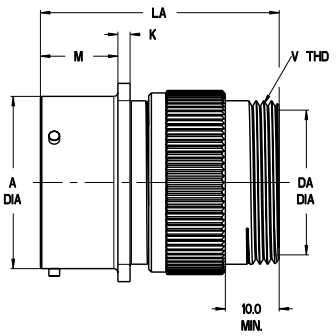

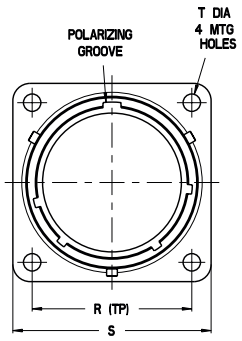

Shell size	Ø A +0,03 – 0,13	K ±0,1	M ±0,15	R ±0,15	S max.	Ø T ±0,15	Ø DA min.	LA max.	VTHD Thread Type 2A
8	12,00	1,9	11,6	15,1	21,0	3,05	8,5	38,0	1/2-28UNEF
10	15,00	1,9	11,6	18,3	24,2	3,05	11,8	38,0	5/8-24UNEF
12	19,05	1,9	11,6	20,6	26,6	3,05	15,0	38,0	3/4-20UNEF
14	22,23	1,9	11,6	23,0	29,0	3,05	17,9	38,0	7/8-20UNEF
16	25,40	1,9	11,6	24,6	31,3	3,05	21,1	38,0	1-20UNEF
18	28,58	1,9	11,6	27,0	33,7	3,05	24,1	38,0	1-3/16-18UNEF
20	31,75	2,2	14,25	29,4	36,9	3,05	26,5	43,1	1-3/16-18UNEF
22	34,93	2,2	14,25	31,8	40,1	3,05	30,4	43,1	1-7/16-18UNEF
24	38,10	2,2	15,1	34,9	43,3	3,75	32,8	43,1	1-7/16-18UNEF

WALL MOUNTING RECEPTACLES KPT00E / KPSE00E (VG95328A) / KPTC0E

Description: Wall Mounting Receptacle with pressure nut and grommet seal.

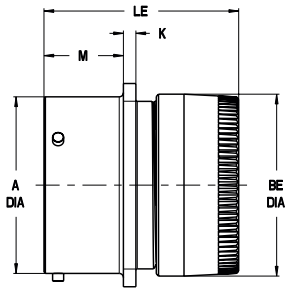

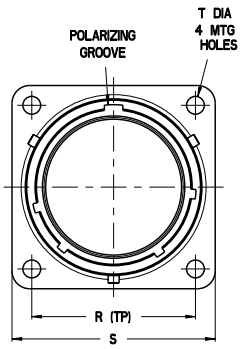

Shell size	Ø A +0,03 – 0,13	K ±0,1	M ±0,15	R ±0,15	S max.	Ø T ±0,15	Ø BE max.	LE max.
8	12,00	1,9	11,6	15,1	21,0	3,05	14,2	32,5
10	15,00	1,9	11,6	18,3	24,2	3,05	17,2	32,5
12	19,05	1,9	11,6	20,6	26,6	3,05	20,4	32,5
14	22,23	1,9	11,6	23,0	29,0	3,05	23,4	32,5
16	25,40	1,9	11,6	24,6	31,3	3,05	26,6	32,5
18	28,58	1,9	11,6	27,0	33,7	3,05	29,6	32,5
20	31,75	2,2	14,25	29,4	36,9	3,05	32,8	34,5
22	34,93	2,2	14,25	31,8	40,1	3,05	36,0	34,5
24	38,10	2,2	15,1	34,9	43,3	3,75	39,2	34,5

WALL MOUNTING RECEPTACLES KPT00F / KPSE00F (VG95328B) / KPTC0F

Description: Wall Mounting Receptacle with endbell, cable clamp and grommet seal.

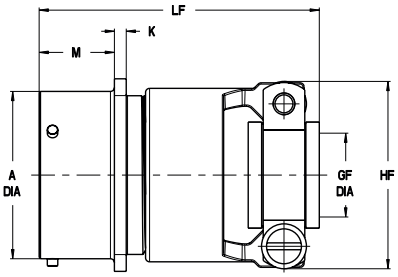

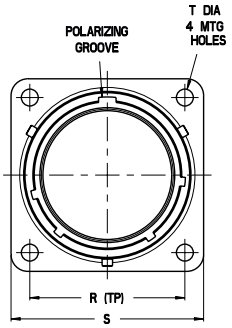

Shell size	Ø A +0,03 – 0,13	K ±0,1	M ±0,15	R ±0,15	S max.	Ø T ±0,15	Ø GF min.	HF max.	LF max.
8	12,00	1,9	11,6	15,1	21,0	3,05	2,9	19,3	56,0
10	15,00	1,9	11,6	18,3	24,2	3,05	4,5	20,8	56,0
12	19,05	1,9	11,6	20,6	26,6	3,05	7,7	24,4	56,0
14	22,23	1,9	11,6	23,0	29,0	3,05	9,3	27,2	56,0
16	25,40	1,9	11,6	24,6	31,3	3,05	12,4	28,7	56,0
18	28,58	1,9	11,6	27,0	33,7	3,05	15,6	35,3	56,0
20	31,75	2,2	14,25	29,4	36,9	3,05	15,6	35,3	61,0
22	34,93	2,2	14,25	31,8	40,1	3,05	18,8	39,9	61,0
24	38,10	2,2	15,1	34,9	43,3	3,75	20,1	43,2	61,0

WALL MOUNTING RECEPTACLES KPT0E...DN / KPSE0E...DN / KPTC0E...DN

Description: Wall Mounting Receptacle with endbell for heat shrink boot and grommet seal.

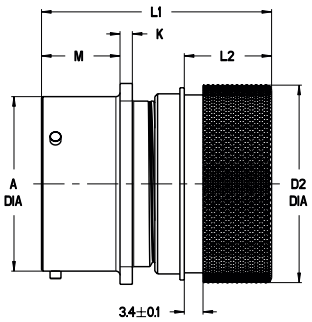

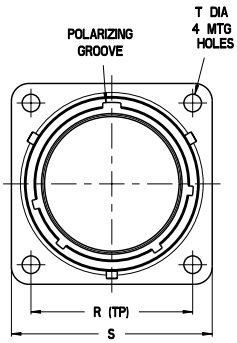

Shell size	Ø A +0,03 – 0,13	K ±0,1	M ±0,15	R ±0,15	S max.	Ø T ±0,15	Ø D2 –0,5	L1 max.	L2 ±0,5
8	12,00	1,9	11,6	15,1	21,0	3,05	15,6	35,0	12,2
10	15,00	1,9	11,6	18,3	24,2	3,05	18,4	35,0	12,2
12	19,05	1,9	11,6	20,6	26.6	3,05	23,7	35,0	12,2
14	22,23	1,9	11,6	23,0	29,0	3,05	24,5	35,0	12,2
16	25,40	1,9	11,6	24,6	31,3	3,05	29,8	37,0	14,5
18	28,58	1,9	11,6	27,0	33,7	3,05	32,0	37,0	14,5
20	31,75	2,2	14,25	29,4	36,9	3,05	36,1	42,0	15,8
22	34,93	2,2	14,25	31,8	40,1	3,05	38,5	42,0	15,8
24	38,10	2,2	15,1	34,9	43,3	3,75	41,6	42,0	14,9

Dimensions shown in mm | Specifications and dimensions subject to change
This document solely applies to European manufactured KPT / KPSE / KPTC products

WALL MOUNTING RECEPTACLES KPT0E...DZ / KPSE0E...DZ (VG95328R) / KPTC0E...DZ

Description: Wall Mounting Receptacle with endbell for heat shrink boot and grommet seal, shielded.

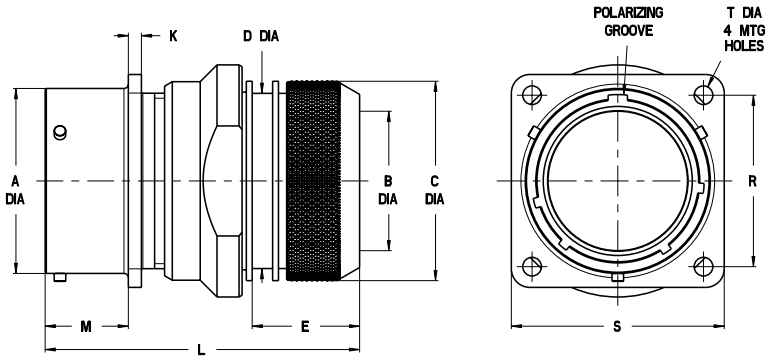

Shell size	Ø A +0,03 – 0,13	Ø B min.	Ø C ±0,5	Ø D max.	E ±1,0	K ±0,1	L max.	M ±0,15	R ±0,15	S max.	Ø T ±0,15
8	12,00	6,6	16,0	13,3	15,0	1,9	52,0	11,6	15,1	21,0	3,05
10	15,00	9,2	18,0	16,1	15,0	1,9	52,0	11,6	18,3	24,2	3,05
12	19,05	12,2	22,0	20,0	17,0	1,9	52,0	11,6	20,6	26,6	3,05
14	22,23	15,2	25,0	22,2	18,0	1,9	53,0	11,6	23,0	29,0	3,05
16	25,40	18,3	28,0	26,2	18,0	1,9	53,0	11,6	24,6	31,3	3,05
18	28,58	20,0	32,0	28,5	18,0	1,9	53,0	11,6	27,0	33,7	3,05
20	31,75	23,0	34,0	32,5	18,0	2,2	58,0	14,25	29,4	36,9	3,05
22	34,93	26,0	38,0	34,8	18,0	2,2	58,0	14,25	31,7	40,1	3,05
24	38,10	28,8	41,0	37,9	18,0	2,2	58,0	15,1	34,9	43,3	3,75

WALL MOUNTING RECEPTACLE WITH BANDING ADAPTER KPSE0 / KPT0 / KPTC0 ... DT

Description: Wall Mounting Receptacle with banding adapter for heat shrink boot and grommet seal, shielded.

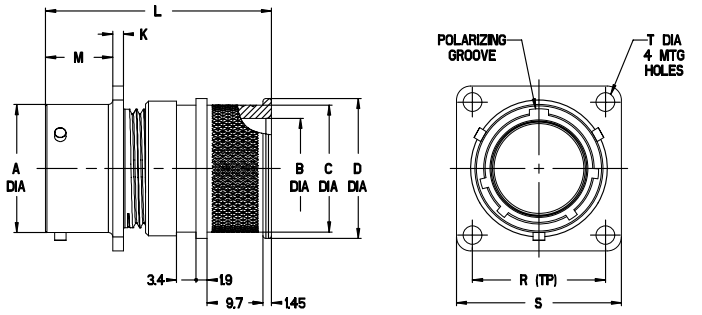

Shell size	Ø A +0,03 – 0,13	Ø B ±0.2	Ø C ±0.2	Ø D ±0.2	K ±0.1	L max.	M ±0.15	R ±0.15	S max.	Ø T ±0,15
8	12.0	8.2	13.1	15.35	1.9	39.3	11.6	15.0	21.0	3.05
10	15.0	11.4	15.9	18.15	1.9	39.3	11.6	18.3	24.2	3.05
12	19.05	14.5	21.2	23.45	1.9	40.1	11.6	20.6	26.6	3.05
14	22.23	17.4	22.0	24.25	1.9	40.1	11.6	23.00	29.0	3.05
16	25.40	20.7	26.0	29.55	1.9	40.1	11.6	24.6	31.3	3.05
18	28.58	23.2	28.2	31.75	1.9	40.1	11.6	27.0	33.7	3.05
20	31.75	26.4	32.3	35.85	2.2	43.4	14.25	29.4	36.9	3.05
22	34.93	29.5	34.6	38.25	2.2	43.4	14.25	31.8	40.1	3.05
24	38.10	32.7	37.7	41.35	2.2	45.3	14.25	34.9	43.3	3.75

For corresponding tooling and banding, please contact the factory for assembly instructions CAS25098

CABLE CONNECTING RECEPTACLES KPT01A / KPSE01A / KPTC1A

Description: Cable connecting receptacle with an endbell with thread, no grommet seal.

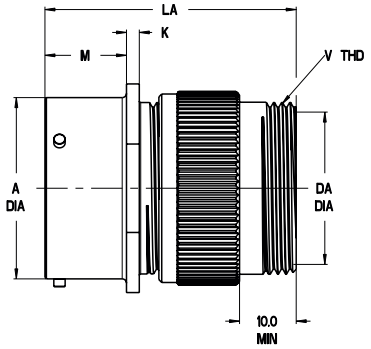

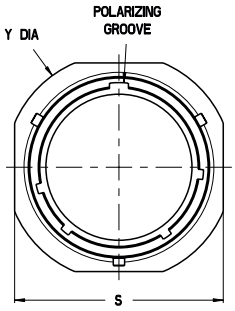

Shell size	Ø A +0,03 – 0,13	K ±0,1	M ±0,15	S max.	Ø Y ±0.2	Ø DA min.	LA max.	VTHD Thread Type 2A
8	12,00	1,9	11,6	21,0	23,8	8,5	38,0	1/2-28UNEF
10	15,00	1,9	11,6	24,2	26,9	11,8	38,0	5/8-24UNEF
12	19,05	1,9	11,6	26,55	29,3	15,0	38,0	3/4-20UNEF
14	22,23	1,9	11,6	28,9	31,7	17,9	38,0	7/8-20UNEF
16	25,40	1,9	11,6	31,3	34,1	21,1	38,0	1-20UNEF
18	28,58	1,9	11,6	33,7	36,5	24,1	38,0	1-3/16-18UNEF
20	31,75	2,2	14,25	36,9	39,6	26,5	43,1	1-3/16-18UNEF
22	34,93	2,2	14,25	40,0	42,8	30,4	43,1	1-7/16-18UNEF
24	38,10	2,2	15,1	43,2	46,0	32,8	43,1	1-7/16-18UNEF

CABLE CONNECTING RECEPTACLES KPT01E / KPSE01E / KPTC1E

Description: Cable connecting receptacle with pressure nut and grommet seal.

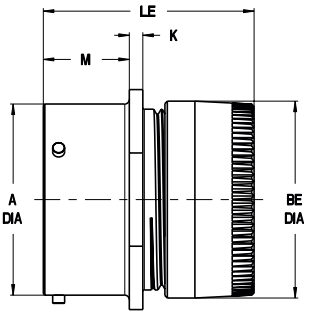

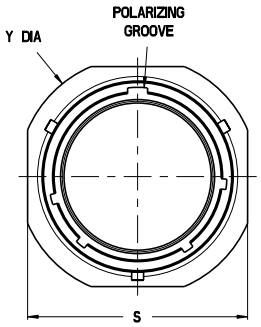

Shell size	Ø A +0,03 – 0,13	K ±0,1	M ±0,15	S max.	Ø Y ±0.2	Ø BE max.	LE max.
8	12,00	1,9	11,6	21,0	23,8	14,2	32,5
10	15,00	1,9	11,6	24,2	26,9	17,2	32,5
12	19,05	1,9	11,6	26,55	29,3	20,4	32,5
14	22,23	1,9	11,6	28,9	31,7	23,4	32,5
16	25,40	1,9	11,6	31,3	34,1	26,6	32,5
18	28,58	1,9	11,6	33,7	36,5	29,6	32,5
20	31,75	2,2	14,25	36,9	39,6	32,8	34,5
22	34,93	2,2	14,25	40,0	42,8	36,0	34,5
24	38,10	2,2	15,1	43,2	46,0	39,2	34,5

Dimensions shown in mm | Specifications and dimensions subject to change
This document solely applies to European manufactured KPT / KPSE / KPTC products

CABLE CONNECTING RECEPTACLES KPT01F / KPSE01F / KPTC1F

Description: Cable connecting receptacle with endbell, cable clamp and grommet seal.

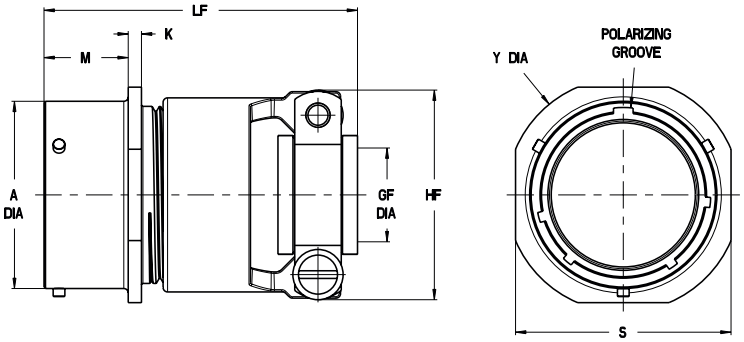

Shell size	Ø A +0,03 – 0,13	K ±0,1	M ±0,15	S max.	Ø Y ±0.2	Ø GF min.	HF max.	LF max.
8	12,00	1,9	11,6	21,0	23,8	2,9	19,3	56,0
10	15,00	1,9	11,6	24,2	26,9	4,5	20,8	56,0
12	19,05	1,9	11,6	26,55	29,3	7,7	24,4	56,0
14	22,23	1,9	11,6	28,9	31,7	9,3	27,2	56,0
16	25,40	1,9	11,6	31,3	34,1	12,4	28,7	56,0
18	28,58	1,9	11,6	33,7	36,5	15,6	35,3	56,0
20	31,75	2,2	14,25	36,9	39,6	15,6	35,3	61,0
22	34,93	2,2	14,25	40,0	42,8	18,8	39,9	61,0
24	38,10	2,2	15,1	43,2	46,0	20,1	43,2	61,0

CABLE CONNECTING RECEPTACLES KPT1E...DN / KPSE1E...DN / KPTC1E...DN

Description: Cable connecting receptacle with endbell for heat shrink boot and grommet seal.

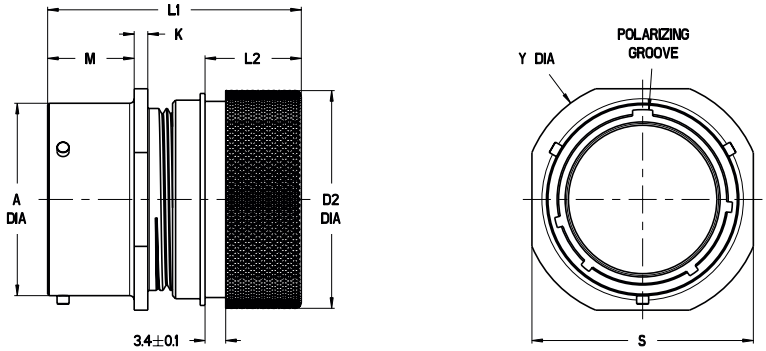

Shell size	Ø A +0,03 – 0,13	K ±0,1	M ±0,15	S max.	Ø Y ±0.2	Ø D2 –0,5	L1 max.	L2 ±0,5
8	12,00	1,9	11,6	21,0	23,8	15,6	35,0	12,2
10	15,00	1,9	11,6	24,2	26,9	18,4	35,0	12,2
12	19,05	1,9	11,6	26,55	29,3	23,7	35,0	12,2
14	22,23	1,9	11,6	28,9	31,7	24,5	35,0	12,2
16	25,40	1,9	11,6	31,3	34,1	29,8	37,0	14,5
18	28,58	1,9	11,6	33,7	36,5	32,0	37,0	14,5
20	31,75	2,2	14,25	36,9	39,6	36,1	42,0	15,8
22	34,93	2,2	14,25	40,0	42,8	38,5	42,0	15,8
24	38,10	2,2	15,1	43,2	46,0	41,6	42,0	14,9

CABLE CONNECTING RECEPTACLES KPT1E...DZ / KPSE1E...DZ / KPTC1E...DZ

Description: Cable connecting receptacle with endbell for heat shrink boot and grommet seal, shielded.

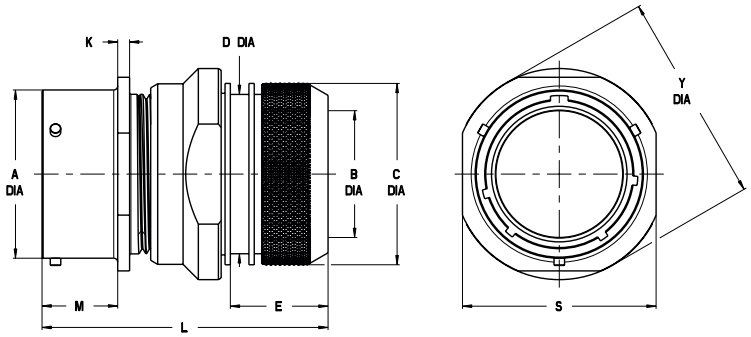

Shell size	Ø A +0,03–0,13	M ±0,15	Ø B min.	Ø C ±0,5	Ø D max.	E ±1,0	K ±0,1	L max.	S max.	Ø Y ±0.2
8	12,00	11,6	6,6	16,0	13,3	15,0	1,9	52,0	21,0	23,8
10	15,00	11,6	9,2	18,0	16,1	15,0	1,9	52,0	24,2	26,9
12	19,05	11,6	12,2	22,0	20,0	17,0	1,9	52,0	26,55	29,3
14	22,23	11,6	15,2	25,0	22,2	18,0	1,9	53,0	28,9	31,7
16	25,40	11,6	18,3	28,0	26,2	18,0	1,9	53,0	31,3	34,1
18	28,58	11,6	20,0	32,0	28,5	18,0	1,9	53,0	33,7	36,5
20	31,75	14,25	23,0	34,0	32,5	18,0	2,2	58,0	36,9	39,6
22	34,93	14,25	26,0	38,0	34,8	18,0	2,2	58,0	40,0	42,8
24	38,10	14,25	28,8	41,0	37,9	18,0	2,2	58,0	43,2	46,0

CABLE CONNECTING RECEPTACLES KPSE1 / KPT1 / KPTC1 ... DT

Description: Cable connecting receptacle with banding adapter for heat shrink boot and grommet seal, shielded.

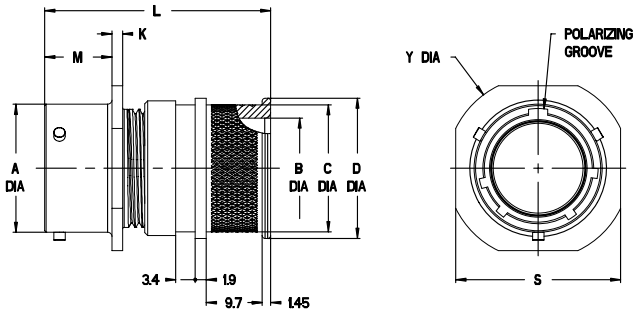

Shell size	Ø A +0,03 – 0,13	Ø B ±0.2	Ø C ±0.2	Ø D ±0.2	K ±0.1	L max.	M ±0.15	S max.	Ø Y ±0.2
8	12.0	8.2	13.1	15.35	1.9	39.3	11.6	21,0	23,8
10	15.0	11.4	15.9	18.15	1.9	39.3	11.6	24,2	26,9
12	19.05	14.5	21.2	23.45	1.9	40.1	11.6	26,55	29,3
14	22.23	17.4	22.0	24.25	1.9	40.1	11.6	28,9	31,7
16	25.40	20.7	26.0	29.55	1.9	40.1	11.6	31,3	34,1
18	28.58	23.2	28.2	31.75	1.9	40.1	11.6	33,7	36,5
20	31.75	26.4	32.3	35.85	2.2	43.4	14.25	36,9	39,6
22	34.93	29.5	34.6	38.25	2.2	43.4	14.25	40,0	42,8
24	38.10	32.7	37.7	41.35	2.2	45.3	14.25	43,2	46,0

For corresponding tooling and banding, please contact the factory for assembly instructions CAS25098

Dimensions shown in mm | Specifications and dimensions subject to change
This document solely applies to European manufactured KPT / KPSE / KPTC products

BOX MOUNTING RECEPTACLES KPT02E (VG95328H) / KPSE02E (VG95328C) / KPTC2E

Description: box mounting receptacle with through holes in flange.

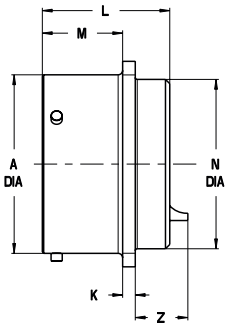

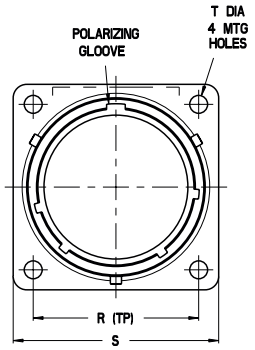

KPT/KPSE/KPTC									KPT/KPTC
Shell size	Ø A +0,03–0,13	L max.	Ø N max.	K ±0,1	M ±0,15	R ±0,15	S max.	Ø T ±0,15	Z max.
8	12,00	21,1	11,1	1,9	11,6	15,1	21,0	3,05	12,3
10	15,00	21,1	14,3	1,9	11,6	18,3	24,2	3,05	12,3
12	19,05	21,1	17,5	1,9	11,6	20,6	26,6	3,05	12,3
14	22,23	21,1	20,6	1,9	11,6	23,0	29,0	3,05	12,3
16	25,40	21,1	23,8	1,9	11,6	24,6	31,3	3,05	12,3
18	28,58	21,1	27,0	1,9	11,6	27,0	33,7	3,05	12,3
20	31,75	22,7	30,2	2,2	14,25	29,4	36,9	3,05	10,8
22	34,93	22,7	33,4	2,2	14,25	31,8	40,1	3,05	10,8
24	38,10	22,7	36,5	2,2	15,1	34,9	43,3	3,75	10,0

THRU-BULKHEAD RECEPTACLES KPTB (VG95328P)

Description: Bulkhead receptacle with mounting flange – with through holes.

INSERT: For example: KPTB14-19PS

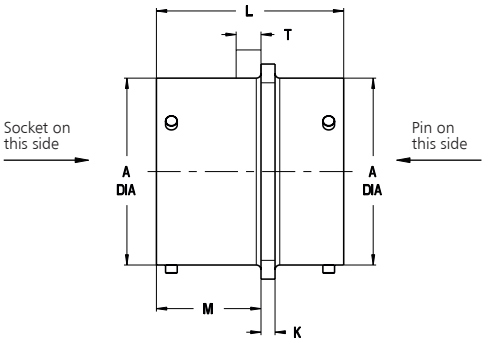

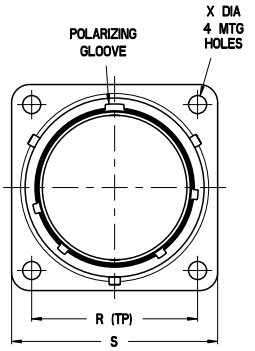

Shell size	Ø A +0,03 – 0,13	K ±0,1	L max	M ±0,25	T max	R ±0,15	S max.	Ø X ±0,5
8	12,00	1,8	28,6	14,5	6,0	15,1	21,0	3,05
10	15,00	1,8	28,6	14,5	6,0	18,3	24,2	3,05
12	19,05	1,8	28,6	14,5	6,0	20,6	26,6	3,05
14	22,23	1,8	28,6	14,5	6,0	23,0	29,0	3,05
16	25,40	1,8	28,6	14,5	6,0	24,6	31,3	3,05
18	28,58	1,8	28,6	14,5	6,0	27,0	33,7	3,05
20	31,75	2,5	31,9	17,7	9,2	29,4	36,9	3,05
22	34,93	2,5	31,9	17,7	9,2	31,8	40,1	3,05
24	38,10	2,5	31,9	17,7	8,0	34,9	43,3	3,75

STRAIGHT PLUGS KPT06A / KPSE06A / KPTC6A

Description: Straight plug with an endbell with thread, no grommet seal.

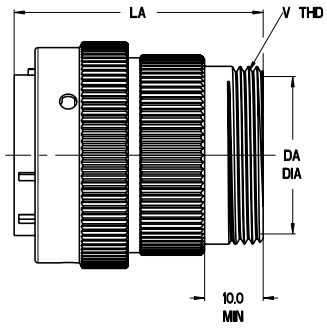

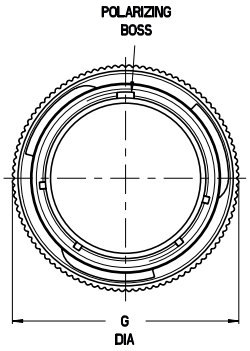

Shell size	Ø G max.	Ø DA min.	LA max.	VTHD Thread Type 2A
8	19,8	8,5	42,0	1/2-28UNEF
10	23,6	11,8	42,0	5/8-24UNEF
12	26,5	15,0	42,0	3/4-20UNEF
14	30,1	17,9	42,0	7/8-20UNEF
16	33,2	21,1	42,0	1-20UNEF
18	35,4	24,1	42,0	1-3/16-18UNEF
20	39,0	26,5	45,0	1-3/16-18UNEF
22	42,1	30,4	45,0	1-7/16-18UNEF
24	45,2	32,8	45,0	1-7/16-18UNEF

STRAIGHT PLUGS KPT06E / KPSE06E / KPTC6E

Description: Straight plug with pressure nut and grommet seal.

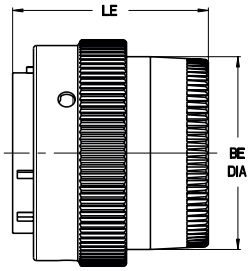

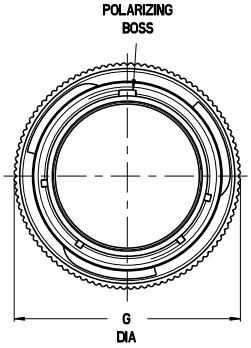

Shell size	Ø G max.	Ø BE max.	LE max.
8	19,8	14,2	32,5
10	23,6	17,2	32,5
12	26,5	20,4	32,5
14	30,1	23,4	32,5
16	33,2	26,6	32,5
18	35,4	29,6	32,5
20	39,0	32,8	34,5
22	42,1	36,0	34,5
24	45,2	39,2	34,5

Dimensions shown in mm | Specifications and dimensions subject to change
This document solely applies to European manufactured KPT / KPSE / KPTC products

STRAIGHT PLUGS KPT06F / KPSE06F (VG95328K) / KPTC6F

Description: Straight plug with endbell, cable clamp and grommet seal.

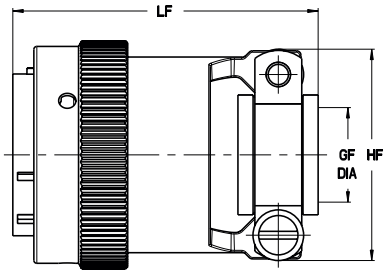

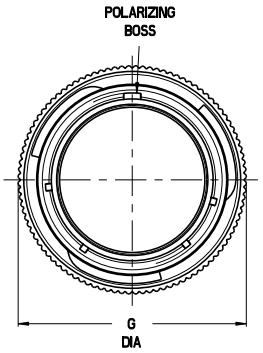

Shell size	Ø G max.	Ø GF min.	HF max.	LF max.
8	19,8	2,9	19,3	56,0
10	23,6	4,5	20,8	56,0
12	26,5	7,7	24,4	56,0
14	30,1	9,3	27,2	56,0
16	33,2	12,4	28,7	59,0
18	35,4	15,6	35,3	59,0
20	39,0	15,6	35,3	59,0
22	42,1	18,8	39,9	59,0
24	45,2	20,1	43,2	59,0

STRAIGHT PLUGS KPT6E...DN / KPSE6E...DN(VG95328J) / KPTC6E...DN

Description: Straight plug with endbell for heat shrink boot and grommet seal.

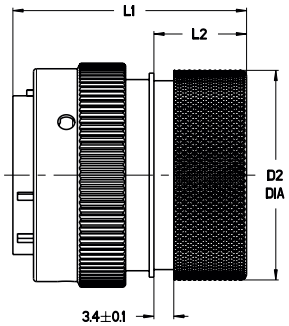

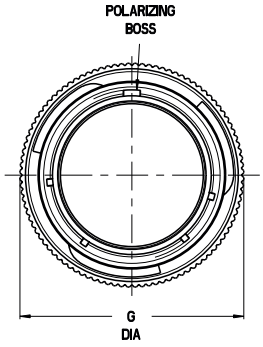

Shell size	Ø G max.	Ø D2 –0,5	L1 max.	L2 ±0,5
8	19,8	15,6	35,0	12,2
10	23,6	18,4	35,0	12,2
12	26,5	23,7	35,0	12,2
14	30,1	24,5	35,0	12,2
16	33,2	29,8	37,0	14,5
18	35,4	32,0	37,0	14,5
20	39,0	36,1	42,0	15,8
22	42,1	38,5	42,0	15,8
24	45,2	41,6	42,0	14,9

STRAIGHT PLUGS KPT6E...DZ / KPSE6E...DZ (VG95328M) / KPTC6E...DZ

Description: Straight plug with endbell for heat shrink boot and grommet seal, shielded.

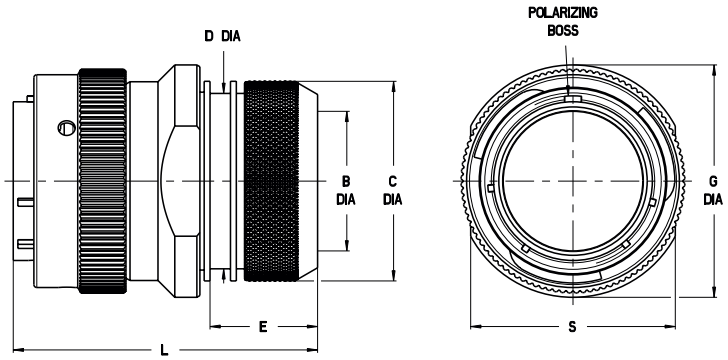

Shell size	Ø B min.	Ø C +0,5	Ø G max.	Ø D max.	E 1,0	L max.	S +0,2
8	6,6	16,0	19,1	13,3	15,0	48,0	17,00
10	9,2	18,0	22,0	16,1	15,0	48,0	19,00
12	12,2	22,0	26,2	20,0	17,0	48,0	23,00
14	15,2	25,0	29,4	22,2	18,0	49,0	26,00
16	18,3	28,0	32,8	26,2	18,0	49,0	29,00
18	20,0	32,0	35,4	28,5	18,0	49,0	33,00
20	23,0	34,0	39,0	32,5	18,0	53,0	35,00
22	26,0	38,0	42,1	34,8	18,0	53,0	39,00
24	28,8	41,0	45,2	37,9	18,0	53,0	42,00

STRAIGHT PLUGS KPSE6 / KPT6 / KPTC6 ... DT

Description: Straight Plug with banding adapter for heat shrink boot and grommet seal, shielded.

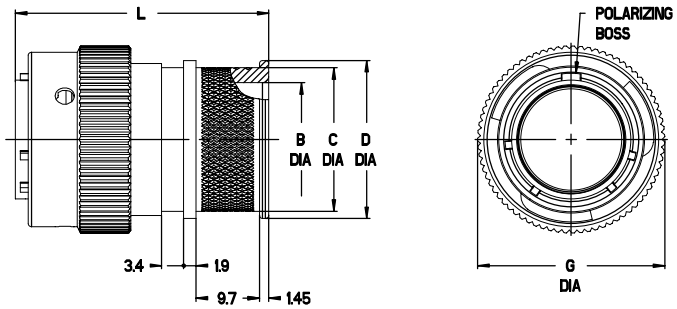

Shell size	Ø A +0,03 – 0,13	Ø B ±0.2	Ø C ±0.2	Ø D ±0.2	K ±0.1	L max.	M ±0.15	S max.	Ø T ±0,15
8	12.0	8.2	13.1	15.35	1.9	39.3	11.6	20.6	23.8
10	15.0	11.4	15.9	18.15	1.9	39.3	11.6	23.8	26.9
12	19.05	14.5	21.2	23.45	1.9	40.1	11.6	26.15	29.3
14	22.23	17.4	22.0	24.25	1.9	40.1	11.6	28.5	31.7
16	25.40	20.7	26.0	29.55	1.9	40.1	11.6	30.7	34.1
18	28.58	23.2	28.2	31.75	1.9	40.1	11.6	33.3	36.5
20	31.75	26.4	32.3	35.85	2.2	43.4	14.25	36.91	39.6
22	34.93	29.5	34.6	38.25	2.2	43.4	14.25	40.08	42.8
24	38.10	32.7	37.7	41.35	2.2	45.3	14.25	42.8	46.0

For corresponding tooling and banding, please contact the factory for assembly instructions CAS25098

Dimensions shown in mm | Specifications and dimensions subject to change
This document solely applies to European manufactured KPT / KPSE / KPTC products

STRAIGHT PLUG KPT6PG/KPTC6PG

Description: Straight plug with adapter for PG gland nut. Gland nut is not included.

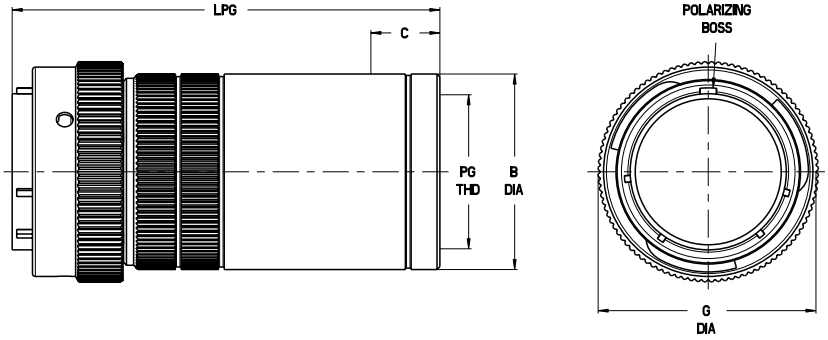

Shell size	Ø G max.	Ø B max.	C min.	L_{PG} max.	PG_{THD}
10	23,6	19,0	10,5	58,5	PG 09
12	26,5	22,5	10,5	58,5	PG 11
14	30,1	25,0	10,5	58,5	PG 13,5
16	33,2	28,0	10,5	73,0	PG 16
18	35,4	32,5	11,5	73,0	PG 21
20	39,0	34,5	11,5	76,0	PG 21
22	42,1	38,0	11,5	82,0	PG 21
24	45,2	40,5	11,5	82,0	PG 29

STRAIGHT PLUG KPT6ME/KPTC6ME

Description: Straight plug with adapter for ME gland nut. Gland nut is not included.

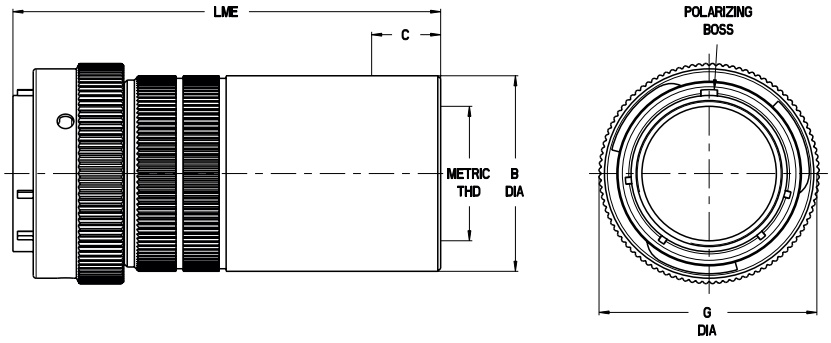

Shell size	Ø G max.	Ø B max.	C min.	L_{ME} max.	Metric Thread
10	23,6	19,0	10,5	58,5	M 12x1,5
12	26,5	22,5	10,5	58,5	M 16x1,5
14	30,1	25,0	10,5	58,5	M 20x1,5
16	33,2	28,0	10,5	73,0	M20 x 1,5
18	35,4	32,5	11,5	73,0	M 25x1,5
20	39,0	34,5	11,5	76,0	M 25x1,5
22	42,1	38,0	11,5	82,0	M 32x1,5
24	45,2	40,5	11,5	82,0	M 32x1,5

JAM NUT RECEPTACLES KPT07A / KPTC7A

Description: Jam nut receptacle without endbell.

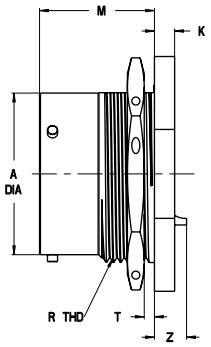

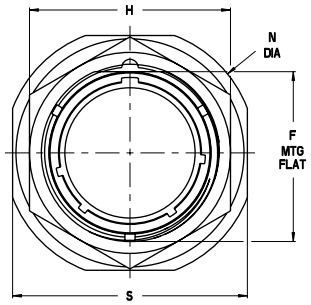

Shell size	Ø A +0,03 – 0,13	F ±0,15	H ±0,15	K ±0,25	M ±0,15	RTHD Thread Type 2A	S max.	T Panel Thickness		Ø N ±0.4	Z max.
								min.	max.		
8	12,00	13,3	19,0	3,2	17,7	9/16-24UNEF	24,3	1,6	3,5	26,9	7,9
10	15,00	16,5	22,2	3,2	17,7	11/16-24UNEF	27,4	1,6	3,5	30,1	7,9
12	19,05	20,6	27,0	3,2	17,7	7/8-20UNEF	32,2	1,6	3,5	34,9	7,9
14	22,23	23,8	30,2	3,2	17,7	1-20UNEF	35,4	1,6	3,5	38,1	7,9
16	25,40	26,9	33,3	3,2	17,7	1-1/8-18UNEF	38,6	1,6	3,5	41,2	7,9
18	28,58	30,1	36,5	3,2	17,7	1-1/4-18UNEF	41,7	1,6	3,5	44,4	7,9
20	31,75	33,3	39,7	4,0	22,5	1-3/8-18UNEF	46,5	1,6	6,5	49,2	4,7
22	34,93	36,5	42,9	4,0	22,5	1-1/2-18UNEF	49,7	1,6	6,5	52,3	4,7
24	38,10	39,6	46,0	4,0	23,3	1-5/8-18UNEF	52,8	1,6	6,5	55,5	3,8

JAM NUT RECEPTACLES KPT07E / KPSE07E (VG95328D) / KPTC7E

Description: Jam nut receptacle with pressure nut and grommet seal.

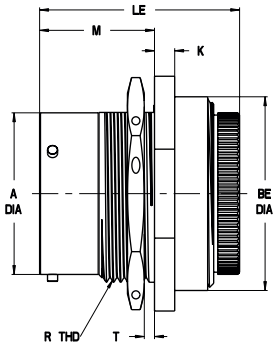

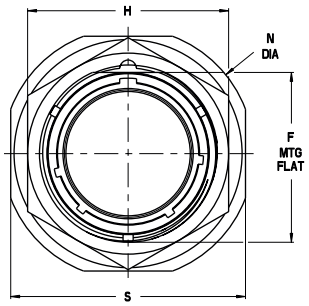

Shell size	Ø A +0,03 – 0,13	F ±0,15	H ±0,15	K ±0,25	M ±0,15	RTHD Thread Type 2A	S max.	T Panel Thickness		Ø N ±0.4	Ø BE max.	LE max.
								min.	max.			
8	12,00	13,3	19,0	3,2	17,7	9/16-24UNEF	24,3	1,6	3,5	26,9	18,2	33,5
10	15,00	16,5	22,2	3,2	17,7	11/16-24UNEF	27,4	1,6	3,5	30,1	21,5	33,5
12	19,05	20,6	27,0	3,2	17,7	7/8-20UNEF	32,2	1,6	3,5	34,9	24,6	33,5
14	22,23	23,8	30,2	3,2	17,7	1-20UNEF	35,4	1,6	3,5	38,1	27,8	33,5
16	25,40	26,9	33,3	3,2	17,7	1-1/8-18UNEF	38,6	1,6	3,5	41,2	31,0	33,5
18	28,58	30,1	36,5	3,2	17,7	1-1/4-18UNEF	41,7	1,6	3,5	44,4	34,1	33,5
20	31,75	33,3	39,7	4,0	22,5	1-3/8-18UNEF	46,5	1,6	6,5	49,2	38,1	39,0
22	34,93	36,5	42,9	4,0	22,5	1-1/2-18UNEF	49,7	1,6	6,5	52,3	41,3	39,0
24	38,10	39,6	46,0	4,0	23,3	1-5/8-18UNEF	52,8	1,6	6,5	55,5	44,5	39,0

Dimensions shown in mm | Specifications and dimensions subject to change
This document solely applies to European manufactured KPT / KPSE / KPTC products

JAM NUT RECEPTACLES KPT07F / KPSE07F (VG95328E) / KPTC7F

Description: Jam nut receptacle with endbell, cable clamp and grommet seal.

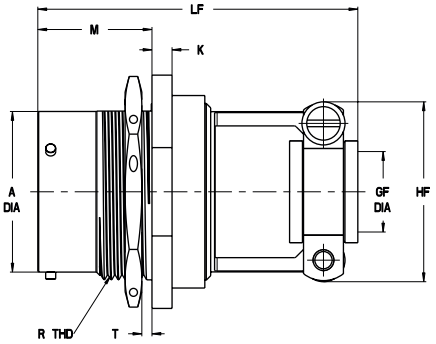

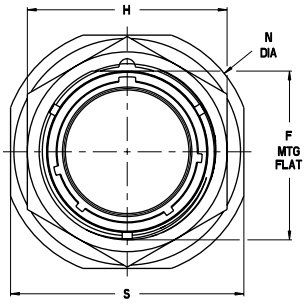

Shell size	Ø A +0,03 – 0,13	F ±0,15	H ±0,15	K ±0,25	M ±0,15	RTHD Thread Type 2A	S max.	T Panel Thickness		Ø N ±0.4	LF max.	Ø GF max.	HF max.
								min.	max.				
8	12,00	13,3	19,0	3,2	17,7	9/16-24UNEF	24,3	1,6	3,5	26,9	44,9	2,9	19,3
10	15,00	16,5	22,2	3,2	17,7	11/16-24UNEF	27,4	1,6	3,5	30,1	44,9	4,5	20,8
12	19,05	20,6	27,0	3,2	17,7	7/8-20UNEF	32,2	1,6	3,5	34,9	44,9	7,7	24,4
14	22,23	23,8	30,2	3,2	17,7	1-20UNEF	35,4	1,6	3,5	38,1	44,9	9,3	27,2
16	25,40	26,9	33,3	3,2	17,7	1-1/8-18UNEF	38,6	1,6	3,5	41,2	48,4	12,4	28,7
18	28,58	30,1	36,5	3,2	17,7	1-1/4-18UNEF	41,7	1,6	3,5	44,4	48,4	15,6	35,3
20	31,75	33,3	39,7	4,0	22,5	1-3/8-18UNEF	46,5	1,6	6,5	49,2	50,3	15,6	35,3
22	34,93	36,5	42,9	4,0	22,5	1-1/2-18UNEF	49,7	1,6	6,5	52,3	50,3	18,8	39,9
24	38,10	39,6	46,0	4,0	23,3	1-5/8-18UNEF	52,8	1,6	6,5	55,5	50,3	20,1	43,2

JAM NUT RECEPTACLES KPT7E...DN / KPSE7E...DN (VG95328S) / KPTC7E…DN

Description: Jam nut receptacle with endbell for heat shrink boot and grommet seal.

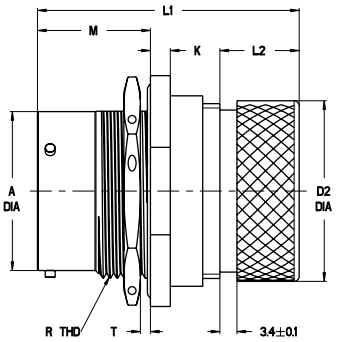

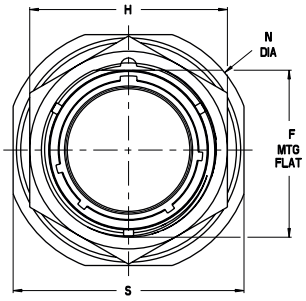

Shell size	Ø A +0,03 – 0,13	F ±0,15	H ±0,15	K ±0,25	M ±0,15	RTHD Thread Type 2A	S max.	T Panel Thickness		Ø N ±0.4	L1 max.	L2 ±0,15	Ø D2 max.
								min.	max.				
8	12,00	13,3	19,0	3,2	17,7	9/16-24UNEF	24,3	1,6	3,5	26,9	43,0	12,2	15,6
10	15,00	16,5	22,2	3,2	17,7	11/16-24UNEF	27,4	1,6	3,5	30,1	43,0	12,2	18,4
12	19,05	20,6	27,0	3,2	17,7	7/8-20UNEF	32,2	1,6	3,5	34,9	43,0	12,2	23,7
14	22,23	23,8	30,2	3,2	17,7	1-20UNEF	35,4	1,6	3,5	38,1	43,0	12,2	24,5
16	25,40	26,9	33,3	3,2	17,7	1-1/8-18UNEF	38,6	1,6	3,5	41,2	45,5	14,5	29,8
18	28,58	30,1	36,5	3,2	17,7	1-1/4-18UNEF	41,7	1,6	3,5	44,4	45,5	14,5	32,0
20	31,75	33,3	39,7	4,0	22,5	1-3/8-18UNEF	46,5	1,6	6,5	49,2	52,6	15,8	36,1
22	34,93	36,5	42,9	4,0	22,5	1-1/2-18UNEF	49,7	1,6	6,5	52,3	52,6	15,8	38,5
24	38,10	39,6	46,0	4,0	23,3	1-5/8-18UNEF	52,8	1,6	6,5	55,5	51,6	14,9	41,6

JAM NUT RECEPTACLES KPT7E...DZ / KPSE7E...DZ / KPTC7E...DZ

Description: Jam nut receptacle with endbell for heat shrink boot and grommet seal, shielded.

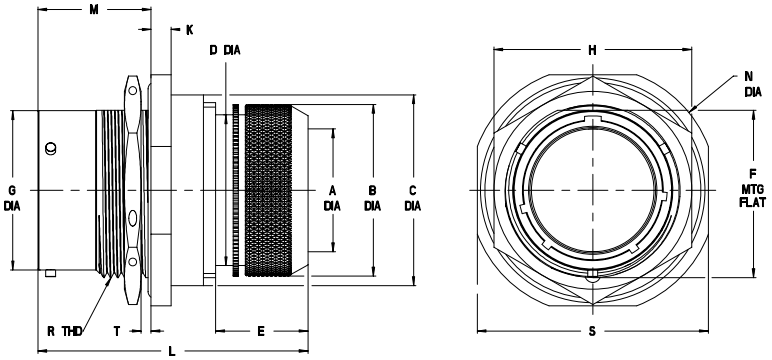

Shell size	Ø A min.	Ø B +0,5	Ø C max.	Ø D max.	E ±1,0	F ±0,15	ØG -0.1	H ±0,15	K ±0,25	M ±0,15	RTHD THREAD TYPE 2A	S max.	T Panel Thickness		ØN ±0.4	L max.
													min.	max.		
8	6,6	16	18,2	13,3	15	13,3	12	19	3,2	17,7	9/16-24UNEF	24,3	1,6	3,5	26,9	47
10	9,2	18	21,4	16,1	15	16,5	15	22,2	3,2	17,7	11/16-24UNEF	27,4	1,6	3,5	30,1	47
12	12,2	22	24,6	20	17	20,6	19,05	27	3,2	17,7	7/8-20UNEF	32,2	1,6	3,5	34,9	49
14	15,2	25	27,8	22,2	18	23,8	22,23	30,2	3,2	17,7	1-20UNEF	35,4	1,6	3,5	38,1	50
16	18,3	28	30,9	26,2	18	26,9	25,4	33,3	3,2	17,7	1-1/8-18UNEF	38,6	1,6	3,5	41,2	50
18	20	32	34,1	28,5	18	30,1	28,58	36,5	3,2	17,7	1-1/4-18UNEF	41,7	1,6	3,5	44,4	50
20	23	34	38,1	32,5	18	33,3	31,75	39,7	4	22,5	1-3/8-18UNEF	46,5	1,6	6,5	49,2	55
22	26	38	41,3	34,8	18	36,5	34,93	42,9	4	22,5	1-1/2-18UNEF	49,7	1,6	6,5	52,3	55
24	28,8	41	44,4	37,9	18	39,5	38,1	46	4	23,3	1-5/8-18UNEF	52,8	1,6	6,5	55,5	55

RIGHT ANGLE PLUG KPT08A/KPSE08A/KPTC8A

Description: Plug with 90° endbell without cable clamp, no grommet seal.

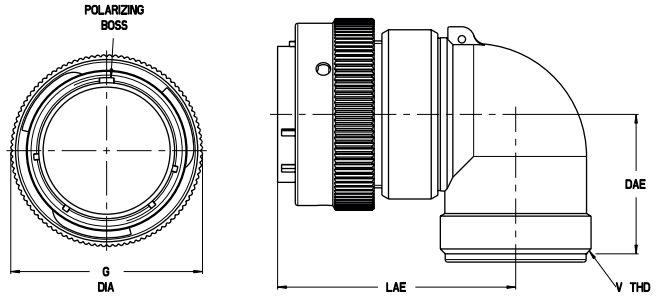

Shell size	Ø G max.	L_A max.	D_A max.	V_{THD} Thread Type 2A
8	19,8	36,1	20,9	1/2-28UNEF
10	23,6	38,3	21,7	5/8-24UNEF
12	26,5	40,9	23,3	3/4-20UNEF
14	30,1	41,6	24,9	7/8-20UNEF
16	33,2	42,5	26,5	1-20UNEF
18	35,4	44,7	28,1	1-3/16-18UNEF
20	39,0	48,3	29,6	1-3/16-18UNEF
22	42,1	52,1	31,7	1-7/16-18UNEF
24	45,2	52,1	33,6	1-7/16-18UNEF

Dimensions shown in mm | Specifications and dimensions subject to change
This document solely applies to European manufactured KPT / KPSE / KPTC products

RIGHT ANGLE PLUG KPT08E / KPSE08E / KPTC8E

Description: Plug with 90° endbell without cable clamp, with grommet seal.

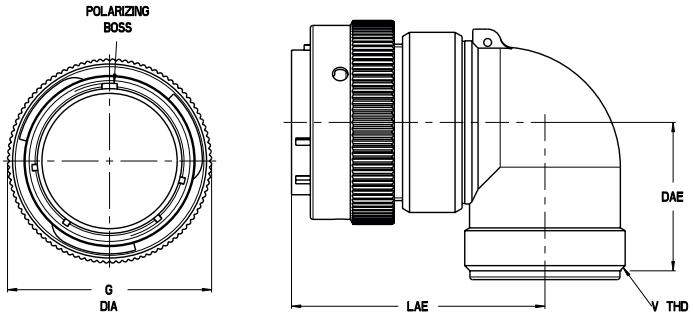

Shell size	Ø G max.	LE max.	DE max.	VTHD Thread Type 2A
8	19,8	36,1	20,9	1/2-28UNEF
10	23,6	38,3	21,7	5/8-24UNEF
12	26,5	40,9	23,3	3/4-20UNEF
14	30,1	41,6	24,9	7/8-20UNEF
16	33,2	42,5	26,5	1-20UNEF
18	35,4	44,7	28,1	1-3/16-18UNEF
20	39,0	48,3	29,6	1-3/16-18UNEF
22	42,1	52,1	31,7	1-7/16-18UNEF
24	45,2	52,1	33,6	1-7/16-18UNEF

RIGHT ANGLE PLUG KPT08F / KPSE08F / KPTC8F

Description: Plug with 90° endbell with cable clamp and grommet seal.

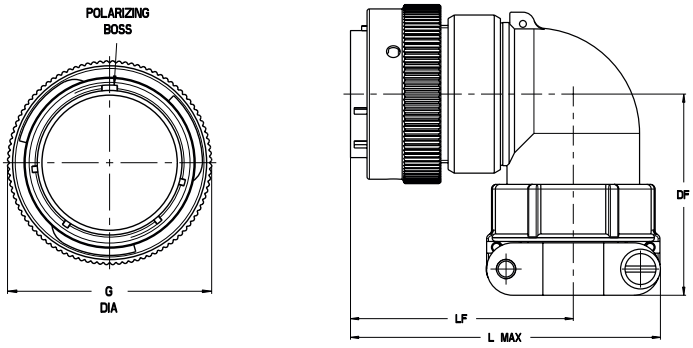

Shell size	Ø G max.	L max.	DF max.	LF max.
8	19,8	47,0	31,4	36,1
10	23,6	49,5	32,2	38,3
12	26,5	53,5	35,4	40,9
14	30,1	55,5	38,6	41,6
16	33,2	57,0	40,2	42,5
18	35,4	62,5	41,8	44,7
20	39,0	67,0	43,4	48,3
22	42,1	71,5	47,9	52,1
24	45,2	74,0	49,9	52,1

BOX MOUNTING RECEPTACLE KPT2/KPTC2 … EX OR EW

Description: Box mounting receptacle with
PCB solder pins:
EX – PCB solder pin 0,76 x 7mm
EW – PCB solder pin 0,6 x 7mm

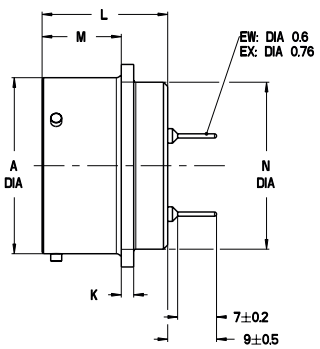

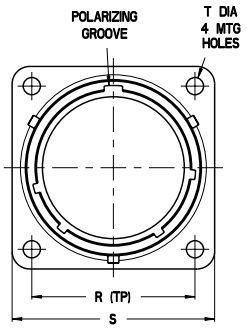

Shell size	Ø A +0,03–0,13	K ±0,1	L max.	M ±0,15	Ø N max.	R ±0,15	S max.	Ø T ±0,15
8	12,00	1,9	21,1	11,60	11,1	15,1	21,0	3,05
10	15,00	1,9	21,1	11,60	14,3	18,3	24,2	3,05
12	19,05	1,9	21,1	11,60	17,5	20,6	26,6	3,05
14	22,23	1,9	21,1	11,60	20,6	23,0	29,0	3,05
16	25,40	1,9	21,1	11,60	23,8	24,6	31,3	3,05
18	28,58	1,9	21,1	11,60	27,0	27,0	33,7	3,05
20	31,75	2,2	22,7	14,25	30,2	29,4	36,9	3,05
22	34,93	2,2	22,7	14,25	33,4	31,7	40,1	3,05
24	38,10	2,2	22,7	15,10	36,5	34,9	43,3	3,75

JAM NUT RECEPTACLES KPT7/KPTC7 …EX OR EW

Description: Jam nut receptacle with
PCB solder pins:
EX – PCB solder pin 0,76 x 7mm
EW – PCB solder pin 0,6 x 7mm

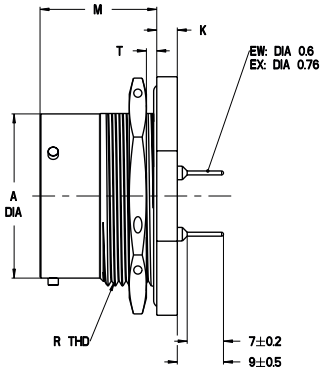

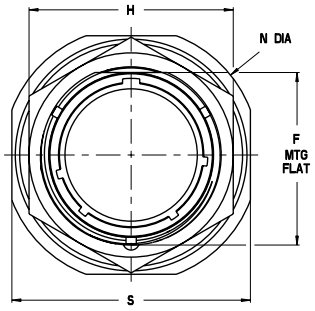

Shell size	Ø A +0,03–0,13	F ±0,15	H ±0,15	K ±0,25	M ±0,15	RTHD Thread Type 2A	S max.	T (Panel Thickness) min.	T (Panel Thickness) max.	Ø N ±0.4
8	12,0	13,3	19,0	3,2	17,7	9/16-24UNEF	24,3	1,6	3,5	26,9
10	15,0	16,5	22,2	3,2	17,7	11/16-24UNEF	27,4	1,6	3,5	30,1
12	19,1	20,6	27,0	3,2	17,7	7/8-20UNEF	32,2	1,6	3,5	34,9
14	22,2	23,8	30,2	3,2	17,7	1-20UNEF	35,4	1,6	3,5	38,1
16	25,4	26,9	33,3	3,2	17,7	1-1/8-18UNEF	38,6	1,6	3,5	41,2
18	28,6	30,1	36,5	3,2	17,7	1-1/4-18UNEF	41,7	1,6	3,5	44,4
20	31,8	33,3	39,7	4,0	22,5	1-3/8-18UNEF	46,5	1,6	6,5	49,2
22	34,9	36,5	42,9	4,0	22,5	1-1/2-18UNEF	49,7	1,6	6,5	52,3
24	38,1	39,6	46,0	4,0	23,3	1-5/8-18UNEF	52,8	1,6	6,5	55,5

Dimensions shown in mm | Specifications and dimensions subject to change
This document solely applies to European manufactured KPT / KPSE / KPTC products

HOW TO ORDER

KPT80- 10 D- A34

Series
KPT80 – for plug
KPT81 – for receptacle

Shell size
8–24

Termination
D – Nylon cord 400 mm Clip and end link attached (not assembled) Crimp tool for end link: M317 (selector position 6)
C – sash chain and terminal link
CB – Nylon cord and terminal link
N – chain with ring (KPT81 only)
NB – Nylon cord with ring (KPT81 only)

Modification
A34 – Nickel plated (RoHS compliant)
A232 – Zinc cobalt, black (RoHS compliant)
A233 – Zinc cobalt, green (RoHS compliant)
A240 – Zinc nickel plating (RoHS compliant)
A241 - Tin Zinc, matt grey (VG approved, RoHS compliant)
(without code) – Olive drab chromate over cadmium (VG approved)

KPTC80- 10 C- C

Series
KPTC80 – for plug
KPTC81 – for receptacle

Shell size
8–24

Termination
C – Nylon cord and endlink
N - Nylon cord with ring (KPTC81 only)

Modification
C – Nickel plated (RoHS compliant)
D – Cadmium plated (VG approved)
R – Zinc cobalt, black (RoHS compliant)
F – Zinc cobalt, green (RoHS compliant)
H – Zinc nickel plating (RoHS compliant)
G - Tin Zinc, matt grey (VG approved, RoHS compliant)

VG95328 Z2 C 10 J

VG Specification

Style
Z1 – for receptacle
Z2 – for plug
Z3 – for jam nut receptacle

Termination
A – chain and terminal link
B - for Z1 and Z2:
Nylon cord and terminal link
C – for Z1 and Z2:
Nylon cord 400 mm and end link
Clip and end link attached (not mounted)
Crimp tool for end link: M317 (selector position 6)
C – for Z3: Nylon cord with ring

Shell size
8–24

Plating
Without identification = Cadmium, VG approved
Identification 'J' = RoHS, Matt Grey SnZn plating, VG approved

Cap with end link (not assembled)

For receptacle
KPT81 termination D
VG95328 Z1 termination C



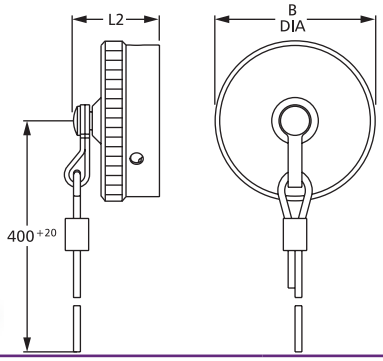

For plug
KPT80 termination D
VG95328 Z2 termination C



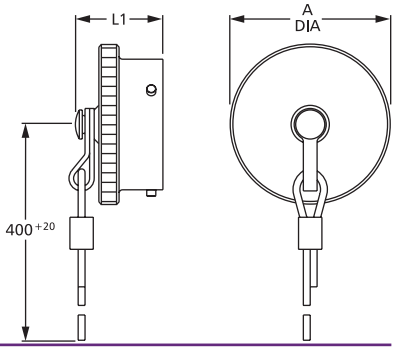

Cap with terminal link

For receptacle
KPT81 termination C (with chain) and CB (with nylon cord)
VG95328 Z1 termination A (with chain)

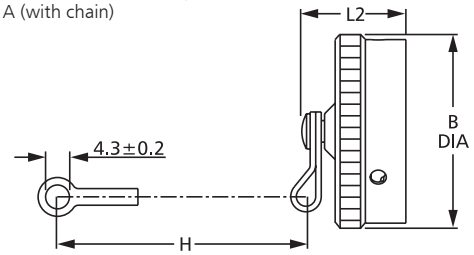

For plug
KPT80 termination C (with chain) and CB (with nylon cord)
VG95328 Z2 termination A (with chain)

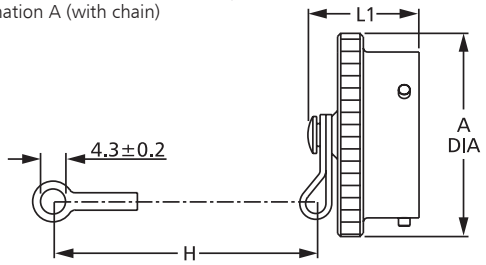

Cap with ring

For receptacle
KPT81 termination N (with chain) and NB (with nylon chord)
VG95328 Z3 termination C (with nylon cord)

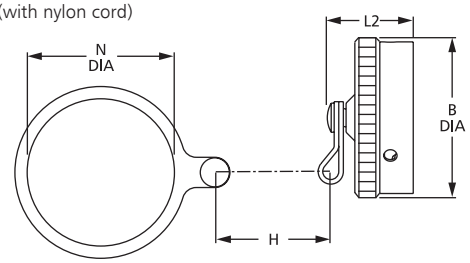

Shell size	Ø A max.	L_1 max.	Ø B max.	L_2 max.	H max.	Ø N ±0,5
8	18,26	19,84	18,0	21,44	76	14,7
10	21,44	19,84	20,3	21,44	76	17,9
12	25,40	19,84	25,1	21,44	89	22,6
14	28,58	19,84	28,2	21,44	89	25,8
16	31,75	19,84	31,5	21,44	89	29,0
18	34,92	19,84	34,5	21,44	89	32,2
20	38,10	21,44	37,8	21,44	101	35,3
22	41,28	21,44	40,9	21,44	101	38,5
24	44,45	22,22	44,2	22,22	101	41,7

Dimensions shown in mm | Specifications and dimensions subject to change
This document solely applies to European manufactured KPT / KPSE / KPTC products

HOW TO ORDER

Below the order reference for Dummy Receptacles KPT series (can be mated with KPSE or KPTC connectors) and separately for VG95328. The table contains the available shell sizes with their respective dimensions.

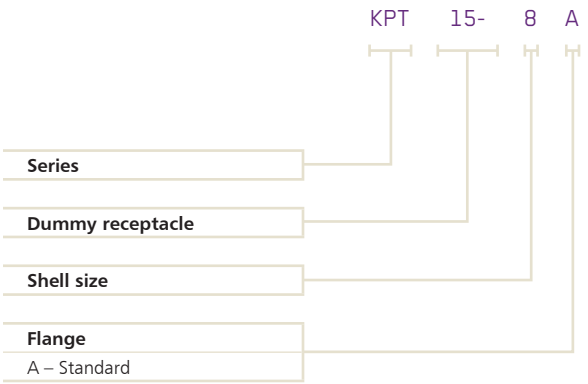



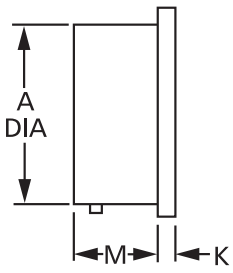

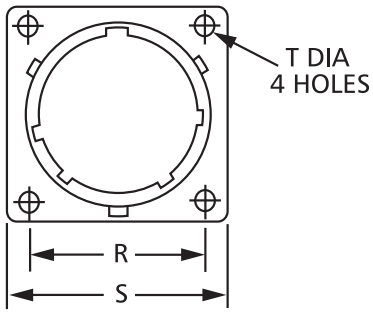

Shell size	Ø A +0,03 −0,13	K ±0,4	M ±0,15	R ±0,15	S max.	Ø T ±0,15
KPT-15-8A	12,00	1,6	12,1	15,1	21,0	3,05
KPT-15-10A	15,00	1,6	12,1	18,3	24,2	3,05
KPT-15-12A	19,05	1,6	12,1	20,6	26,6	3,05
KPT-15-14A	22,23	1,6	12,1	23,0	29,0	3,05
KPT-15-16A	25,40	1,6	12,1	24,6	31,3	3,05
KPT-15-18A	28,58	1,6	12,1	27,0	33,7	3,05
KPT-15-20A	31,75	2,4	14,5	29,4	36,9	3,05
KPT-15-22A	34,93	2,4	14,5	31,8	40,1	3,05
KPT-15-24A	38,10	2,4	15,4	34,9	43,3	3,75

GASKETS

Shell Size	Alu-Flex Conductive	Chloroprene non conductive	Shell Size	Alu-Flex Conductive	Chloroprene non conductive
8	075-8543-000	075-8543-010	**18**	075-8543-005	075-8543-015
10	075-8543-001	075-8543-011	**20**	075-8543-006	075-8543-016
12	075-8543-002	075-8543-012	**22**	075-8543-007	075-8543-017
14	075-8543-003	075-8543-013	**24**	075-8543-008	075-8543-018
16	075-8543-004	075-8543-014			

WIRE HOLE FILLERS

Contact Size	Colour code	Cannon
20	Red	225-1012-000
16	Blue	225-1011-000
12*	Yellow	225-0072-000
Coaxial 14a4*	Yellow	225-0018-000

*KPSE only

CROSS REFERENCE LIST KPT/KPSE/VG95328/MIL-C-26482

All three product lines have specific characteristics and provide a set of unique variants, however, all lines are fully intermateable with each other as well as any other connector series designed according to MIL-DTL 26482 Series I or VG95238 standards.

Solder		
ITT Cannon	**MIL-DTL-26482-Style**	**VG95328**
KPT00E	MS3110E	
KPT00F	MS3110F	
KPT0E-DN		
KPT0E-DZ		
KPT01A		
KPT01E	MS3111E	
KPT01F	MS3111F	
KPT1E-DN		
KPT1E-DZ		
KPT02E	MS3112E	VG95328H
KPT06A		
KPT06E	MS3116E	
KPT06F	MS3116F	
KPT6E-DN		
KPT6E-DZ		
KPT07A		
KPT07E	MS3114E	
KPT07F	MS3114F	
KPT7E-DN		
KPT7E-DZ		
KPT08E		
KPT08F		
KPTB	MS3119	VG95328P

Crimp		
ITT Cannon	**MIL-DTL-26482-Style**	**VG95328**
KPSE00E	MS3120E	VG95328A
KPSE00F	MS3120F	VG95328B
KPSE0E-DN		
KPSE0E-DZ		VG95328R
KPSE01A		
KPSE01E	MS3121E	
KPSE01F	MS3121F	
KPSE1E-DN		
KPSE1E-DZ		
KPSE02E	MS3122E	VG95328C
KPSE06A		
KPSE06E	MS3126E	
KPSE06F	MS3126F	VG95328K
KPSE6E-DN		VG95328J
KPSE6E-DZ		VG95328M
KPSE07A		
KPSE07E	MS3124E	VG95328D
KPSE07F	MS3124F	VG95328E
KPSE7E-DN		VG95328S
KPSE7E-DZ		
KPSE08E		
KPSE08F		

CROSS REFERENCE LIST PROTECTIVE CAPS KPT/ VG95328/MIL-C-26482

This table shows which commercial protective caps are available per VG95328. Additionally, it can be used when cross-referencing a MS protective cap for a KPT (ITT Cannon) substitute.

Part No. ITT Cannon	Part No. MIL-DTL-26482-Style	Part No. VG95328
KPT80..C	MS3180..C	VG95328Z2A..
KPT80..CB		VG95328Z2B..
KPT80..D		VG95328Z2C..
KPT81..C	MS3181..C	VG95328Z1A..
KPT81..CB		VG95328Z1B..
KPT81..D		VG95328Z1C..
KPT81..N	MS3181..N	
KPT81..NB		VG95328Z3C..

Dimensions shown in mm | Specifications and dimensions subject to change
This document solely applies to European manufactured KPT / KPSE / KPTC products

Hand crimping tool M22520/1-01 and Locator: Order No.: 995-0001-585

This universal tool features just one crimp locator with different adjustments for crimping contacts. The tool provides an 8-indent crimp.

Note: The locator needs to be purchased separately:



Descripton Locator	Name	Order-No.	Contact Size
M22520/1-02	Locator	995-0001-736	12
			16
			20
M22520/1-01	Hand Crimp Tool	995-0001-585	



Pneumatic crimping tool WA27F-CE:

Pneumatic operated crimp tool for higher volume production. A pedal for foot operation can also be provided.

The tool provides an 8-indent crimp equivalent to hand crimping tool.

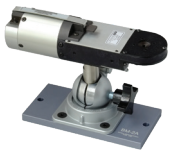

Crimp tool and Bench mount



Foot pedal



Gauge

Description	Name	Order No.
Pneumatic crimp tool (AWG12-20)	WA27F-CE	121586-5067
Bench mount	BM-2A	121586-5068
Foot pedal	WA10A	121586-5069
Gauge	M22520-3-1	995-0001-684

For insertion and extraction of the contacts, please contact the factory for assembly instructions CAS25098

Insertion Tools

To insert crimped contacts into the insulator insertion tools are required.

KPSE



Insertion Tool

Description	Name	Order No.
insertion tool for contact size # 20	MS24256-A20	995-0001-950
insertion tool for contact size # 16	MS24256-A16	995-0001-951
insertion tool for contact size # 12	MS24256-A12	995-0001-913

KPTC



Insertion Tool



CIT-KPTC-20

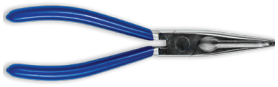

CIT-F80-16

Description	Name	Order No.
insertion tool for contact size # 20	CITG-20A	121086-3104
insertion pliers for contact size # 20	CIT-KPTC-20	121086-3101
insertion tool for contact size # 16	CIT-16	121086-3008
insertion pliers for contact size # 16	CIT-F80-16	121086-0097
insertion TIP for insertion tool # 20	CITG-20A-TIP	121086-3105
insertion TIP for insertion tool # 16	CIT-16-TIP	317-1153-000

Extraction Tools

In case a contact has to be exchanged the following extraction tools are to be used:

KPSE



Extraction tool



Extraction tool for coax contacts

Description	Name	Order No.	Replacement-TIP
extraction tool for contact size # 20	MS24256-R20	995-0001-965	317-7130-000
extraction tool for contact size # 16	MS24256-R16	995-0001-964	317-7129-000
extraction tool for contact size # 12	MS24256-R12	995-0001-966	317-7131-000
extraction tool for coax contacts (KPT14A4)	CET-C6B	070064-0000	121586-0046

KPTC



Extraction tool

Description	Name	Order No.	Replacement-TIP
extraction tool for contact size # 20	CET-KPTC-20	121086-3212	317-8668-000
extraction tool for contact size # 16	CET-KPTC-16	121086-3277	317-8649-025

Pipe Wrench



Soft Jaw Adjustable Pliers for tightening the endbell housing.
Order No.: 550014-1644

Dimensions for Single Conductor and Wire Stripping

In order to assure proper function according to connector specification, especially concerning water tightness, the diameter of the wire insulation must correlate with the following data:

KPSE

Contact Size	Conductor dimensions		Insulation dimensions Waterproof / Ø mm	
	AWG	mm²	min.	max.
20	24 - 18	0,2 – 0,75	1.3	2.1
16	20 - 14	0,5 – 2,0	1.8	2.7
12	14 - 12	-	2.5	3.4

KPTC

Contact Size	Conductor dimensions		Insulation dimensions Waterproof / Ø mm	
	AWG	mm²	min.	max.
20	24 - 18	0,2 – 0,75	1.4	2.15
16	20 - 14	0,5 – 2,0	1.6	2.7

Contacts

KPTC

Contact size	Termination		Contact type		For shell size 8 and contact layout 12 – 14 only	
	AWG	mm²		Contact order reference	Contact order reference	
20	28 - 24	0,08 – 0,20	Pin	430-8588-029	Gold plating	Silver plating
20	24 – 18	0,20 – 0,75	Socket	031-8704-508	031-8704-509	031-8704-506
			Pin	430-8560-404	430-8560-411	430-8560-410
20	-	0,5 – 1,0	Socket	430-8588-031	-	-
			Pin	430-8588-030	-	-
16	20– 14	0,5 – 2,0	Socket	031-8704-502	-	-
			Pin	430-8560-406	-	-

KPSE / VG95328

Contact size	Termination		Contact type	Contact order reference	
	AWG	mm²		KPSE version	VG95328 version
20	24 - 18	0,2 - 0,75	Socket with insulation support	031-8704-203	031-8704-203
			Pin with insulation support	430-8560-006	430-8560-006
16	20 - 14	0,5 - 2,0	Socket	031-8704-000	031-8704-000
			Pin	430-8560-004	430-8560-004
12	14 - 12	2,0	Socket	031-8704-012	-
			Pin	430-8560-016	-
			Grounding Pin	430-8560-020	-

KPT14A4

Contact size	Termination	Contact type	Contact order reference
	Cable type		
Coaxial	RG187/U, RG188/U	Receptacle	DM 53742-5001
		Plug	DM 53740-5001

1. MATERIAL CONTENT AND PHYSICAL FORM

Electrical connectors do not usually contain hazardous materials. They contain conducting and non-conducting materials and can be divided into two groups.

a) Printed circuit types and low cost audio types which employ all plastic insulators and casings.

b) Rugged, Fire Barrier and High Reliability types with metal casings and either natural rubber, synthetic rubber, plastic or glass insulating materials. Contact materials vary with type of connector and also application and are usually manufactured from either: Copper, copper alloys, nickel, alumel, chromel or steel. In special applications, other alloys may be specified.

⚠ CAUTION

2. FIRE CHARACTERISTICS AND ELECTRIC SHOCK HAZARD

There is no fire hazard when the connector is correctly wired and used within the specified parameters.

Incorrect wiring or assembly of the connector or careless use of metal tools or conductive fluids, or transit damage to any of the component parts may cause electric shock or burns. Live circuits must not be broken by separating mated connectors as this may cause arcing, ionization and burning. Heat dissipation is greater at maximum resistance in a circuit. Hot spots may occur when resistance is raised locally by damage, e.g. cracked or deformed contacts, broken strands of wire. Local overheating may also result from the use of the incorrect application tools or from poor quality soldering or slack screw terminals.

Overheating may occur if the ratings in the product Data Sheet/ Catalog are exceeded and can cause breakdown of insulation and hence electric shock. If heating is allowed to continue it intensifies by further increasing the local resistance through loss of temper of spring contacts, formation of oxide film on contacts and wires and leakage currents through carbonization of insulation and tracking paths. Fire can then result in the presence of combustible materials and this may release noxious fumes. Overheating may not be visually apparent. Burns may result from touching overheated components.

3. HANDLING

Care must be taken to avoid damage to any component parts of electrical connectors during installation and use. Although there are normally no sharp edges, care must be taken when handling certain components to avoid injury to fingers.

Electrical connectors may be damaged in transit to the customers, and damage may result in creation of hazards. Products should therefore be examined prior to installation/use and rejected if found to be damaged.

4. DISPOSAL

Incineration of certain materials may release noxious or even toxic fumes.

5. APPLICATION

Connectors with exposed contacts should not be selected for use on the current supply side of an electrical circuit, because an electric shock could result from touching exposed contacts on an unmated connector. Voltages in excess of 30 V ac or 42.5 V DC are potentially hazardous and care should be taken to ensure that such voltages cannot be transmitted in any way to exposed metal parts of the connector body. The connector and wiring should be checked, before making live, to have no damage to metal parts or insulators, no solder blobs, loose strands, conducting lubricants, swarf, or any other undesired conducting particles. Circuit resistance and continuity check should be made to make certain that there are no high resistance joints or spurious conducting paths. Always use the correct application tools as specified in the Data Sheet/Catalog. Do not permit untrained personnel to wire, assemble or tamper with connectors. For operation voltage please see appropriate national regulations.

IMPORTANT GENERAL INFORMATION

(i) Air and creepage paths/Operating voltage. The admissible operating voltages depend on the individual applications and the valid national and other applicable safety regulations. For this reason the air and creepage path data are only reference values. Observe reduction of air and creepage paths due to PC board and/ or harnessing.

(ii) Temperature

All information given are temperature limits. The operation temperature depends on the individual application.

(iii) Other important information

Cannon continuously endeavors to improve their products. Therefore, Cannon products may deviate from the description, technical data and shape as shown in this catalog and data sheets.

ITT Cannon manufactures the highest quality products available in the marketplace; however these products are intended to be used in accordance with the specifications in this publication. Any use or application that deviates from the stated operating specifications is not recommended and may be unsafe. No information and data contained in this publication shall be construed to create any liability on the part of Cannon. Any new issue of this publication shall automatically invalidate and supersede any and all previous issues.

cannon

Amazing things happen when great things connect



Connect with your ITT Cannon representative today or visit us at www.ittcannon.com

Connect with the experts

ITT's Cannon brand is a world leader in the design and manufacture of highly engineered connector solutions for multiple end markets.

Why ITT

ITT is a focused multi-industrial company that designs and manufactures highly engineered critical components and customized technology solutions. ITT's Cannon brand is a leading global manufacturer of connector products serving international customers in aerospace, defense, medical, industrial and transportation end markets. ITT's Connector business, which also includes the Veam and BIW Connector Systems brand, manufactures and supplies a variety of connectors and interconnects that make it possible to transfer data, signal and power in an increasingly connected world.

Connect with your ITT Cannon representative today or visit us at www.ittcannon.com

Follow us

CHINA - Shenzhen City
+86.755.2726.7888

FRANCE
+33.1.60.04.93.93

GERMANY - Weinstadt
+49.7151.699.0

HONG KONG
+852.2732.2720

ITALY - Lainate
+39.02938721

JAPAN - Kanagawa
+81.462.57.2010

KOREA
+82.2.702.7111

MEXICO - Nogales
+52.631.311005

SHANGHAI
+ 86.21.2231.2222.2

SINGAPORE
+65 66974205

UK - Basingstoke
+44.1256.347400

USA - Irvine, CA
+1.800.854.3028

The "ITT Engineered Blocks" symbol, "Engineered for life", "ITT", "Cannon" and "Veam"are registered trademarks of ITT Inc.
Specification and other data are based on information available at the time of printing, and are subject to change without notice.

© 2021 ITT Inc.

ITT Cannon KPx Catalog 102021