KN1751A1/4 ✔ ACTIVE

ALCOSWITCH

TE Internal #: 3-1437622-2

Aluminum 5056(56S), Straight Knurl Knob Design, 6.35 mm [.25 in] Shaft, 44.5 mm [1.75 in] Diameter, Natural, Fingertip Spinner Indicator, Switch Knobs

View on TE.com >

Switches > Switch Knobs

Primary Product Material: **Aluminum 5056(56S)**

Knob Design: **Straight Knurl**

Shaft Size: **6.35 mm [.25 in]**

Product Diameter: **44.5 mm [1.75 in]**

Primary Product Color: **Natural**

Features

Configuration Features

Spinner	Without
Skirt	Without
Spin Plate	Without
Knob Design	Straight Knurl

Body Features

Primary Product Material	Aluminum 5056(56S)
Primary Product Color	Natural

Dimensions

Shaft Size	6.35 mm[.25 in]
Product Diameter	44.5 mm[1.75 in]

Identification Marking

Indicator Style	Fingertip Spinner
Indicator Location	Top

Product Compliance

For compliance documentation, visit the product page on TE.com>

EU RoHS Directive 2011/65/EU	Compliant
EU ELV Directive 2000/53/EC	Compliant
China RoHS 2 Directive MIIT Order No 32, 2016	有害物质含量符合标准要求 No Restricted Substance(s) Above Threshold
EU REACH Regulation (EC) No. 1907/2006	Current ECHA Candidate List: JUNE 2025 (250) Candidate List Declared Against: JUNE 2025 (250) Does not contain REACH SVHC
Halogen Content	Low Halogen - Br, Cl, F < 900 ppm per homogenous material. Also BFR/CFR/PVC Free
Solder Process Capability	Not applicable for solder process capability

Product Compliance Disclaimer

This information is provided based on reasonable inquiry of our suppliers and represents our current actual knowledge based on the information they provided. This information is subject to change. The part numbers that TE has identified as EU RoHS compliant have a maximum concentration of 0.1% by weight in homogenous materials for lead, hexavalent chromium, mercury, PBB, PBDE, DBP, BBP, DEHP, DIBP, and 0.01% for cadmium, or qualify for an exemption to these limits as defined in the Annexes of Directive 2011/65/EU (RoHS2). Finished electrical and electronic equipment products will be CE marked as required by Directive 2011/65/EU. Components may not be CE marked. Additionally, the part numbers that TE has identified as EU ELV compliant have a maximum concentration of 0.1% by weight in homogenous materials for lead, hexavalent chromium, and mercury, and 0.01% for cadmium, or qualify for an exemption to these limits as defined in the Annexes of Directive 2000/53/EC (ELV). Regarding the REACH Regulation, the information TE provides on SVHC in articles for this part number is based on the latest European Chemicals Agency (ECHA) 'Guidance on requirements for substances in articles' posted at this URL: https://echa.europa.eu/guidance-documents/guidance-on-reach

Compatible Parts

TE Part # 3-1437622-8
KN1751BS1/4=KNOB SPINNER L/HAI

Customers Also Bought

TE Part #CAT-D48-ST273
DEUTSCH Connector Solid Contacts

TE Part #DT04-2P
REC, 2P, GRY, N

TE Part #CAT-D487-W416
Wedgelocks: DEUTSCH DT

TE Part #DT06-2S
PLG, 2P, GRY, N

TE Part #114017-ZZ
SEALING PLUG, SIZE 12/16, WHT

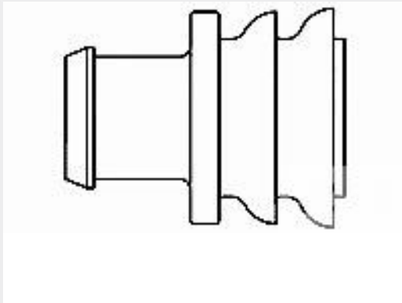

TE Part #281934-2
SINGLE WIRE SEAL

TE Part #CAT-AM71-CH8172
AMP SUPERSEAL 1.5MM, CONNECTOR HOUSING

Documents

CAD Files

Customer View Model
ENG_CVM_CVM_3-1437622-2_A1.3d_igs.zip

English

Customer View Model
ENG_CVM_CVM_3-1437622-2_A1.3d_stp.zip

English

Customer View Model
ENG_CVM_CVM_3-1437622-2_A1.2d_dxf.zip

English

3D PDF

3D

By downloading the CAD file I accept and agree to the Terms and Conditions of use.

Datasheets & Catalog Pages

SWITCHES_CORE_PROGRAM_CATALOG

English

8-1773450-9_SECTION_J_KEYLOCK_SWITCHES_SECTION_K_KNOBS

English