6 Watts

JCE Series

- 2:1 Input Range
- DIP–24 Plastic Case
- Operating Temperature –40 °C to +100 °C
- Single & Dual Outputs
- Optional Metal Case
- 1500 VDC Isolation, 3000 VDC Option
- 3 Year Warranty

Specification

Input

Input Voltage Range	• 12 V (9-18 VDC) 24 V (18-36 VDC) 48 V (36-75 VDC)
Input Current	• See table
Input Filter	• Pi network
Input Reflected Ripple	• 20 mA pk-pk through 12 µH inductor and 4.7 µF capacitor
Input Surge	• 12 V models 25 VDC for 100 ms 24 V models 50 VDC for 100 ms 48 V models 100 VDC for 100 ms
Under Voltage Lockout	• 12 V models on >8.5 V, off <8.0 V 24 V models on >16.5 V, off <15.5 V 48 V models on >34.5 V, off <33.5 V

Output

Output Voltage	• See table
Output Voltage Balance	• ±2% max, dual output models
Initial Set Accuracy	• ±2% max
Minimum Load	• No minimum load required
Line Regulation	• ±0.5% max
Load Regulation	• ±1.2% max, for single output and ±5% max for dual output from 10-100%
Cross Regulation	• ±5% max, on dual output models (see note 1)
Start Up Delay	• 20 ms typical
Ripple & Noise	• 80 mV pk-pk (100 mV for D24 models), 20 MHz bandwidth. See note 2
Transient Response	• 3% max deviation, recovery to within 1% in 300 µs for a 25% load change (4% max. deviation for S3V3 models)
Overload Protection	• 135% - 185% of full load
Short Circuit Protection	• Trip and restart (hiccup mode), auto recovery
Maximum Capacitive Load	• See table
Temperature Coefficient	• 0.02%/°C max

General

Efficiency	• See table
Isolation Voltage	• 1500 VDC Input to Output For optional high isolation versions 3000 VDC Input to Output add suffix -H to model number 1000 VDC Input to Case 1000 VDC Output to Case
Isolation Capacitance	• 1000 pF typical input to output
Isolation Resistance	• $10^9\Omega$
Switching Frequency	• 330 kHz typical
Power Density	• 15 W/in^3
MTBF	• >800 KHrs to MIL-STD-217F at 25 °C, GB

Environmental

Operating Temperature	• -40 °C to +100 °C (see derating curve)
Case Temperature	• +100 °C max
Storage Temperature	• -55 °C to +125 °C
Cooling	• Convection-cooled
Operating Humidity	• Up to 95% RH, non-condensing

EMC

Emissions	• EN55032 Class A conducted
ESD Immunity	• EN61000-4-2, level 3, Perf Criteria B
Radiated Immunity	• EN61000-4-3, 10 V/m, Perf Criteria A
EFT/Burst	• EN61000-4-4, level 3 Perf Criteria A
Surge	• EN61000-4-5, level 2, Perf Criteria A*
Conducted Immunity	• EN61000-4-6, 10 Vrms, Perf Criteria A
Magnetic Field	• EN61000-4-8, 1 A/m, Perf Criteria A

Safety

Safety Approvals	• UL62368-1, CAN/CSA C22.2 No. 62368-1 and 62368-1, CE (Meets all applicable directives), UKCA (Meets all applicable legislation)

** External input capacitor required, 220µF/100V (See note 7)*

Models and Ratings

Input Voltage	Output Voltage	Output Current	Input Current[1]		Maximum Capacitive Load[6]	Efficiency	Model Number[4,5]
			No Load	Full Load			
9-18 VDC	3.3 V	1400 mA	7 mA	513 mA	470 µF	75%	JCE0612S3V3
	5.0 V	1200 mA	7 mA	633 mA	470 µF	79%	JCE0612S05
	12.0 V	500 mA	10 mA	602 mA	100 µF	83%	JCE0612S12
	15.0 V	400 mA	10 mA	595 mA	100 µF	84%	JCE0612S15
	24.0 V	250 mA	20 mA	610 mA	47 µF	82%	JCE0612S24
	±3.3 V	±909 mA	10 mA	658 mA	±220 µF	76%	JCE0612D03
	±5.0 V	±600 mA	10 mA	625 mA	±220 µF	80%	JCE0612D05
	±12.0 V	±250 mA	15 mA	602 mA	±100 µF	83%	JCE0612D12
	±15.0 V	±200 mA	20 mA	595 mA	±100 µF	84%	JCE0612D15
	±24.0 V	±125 mA	35 mA	617 mA	±47 µF	81%	JCE0612D24
18-36 VDC	3.3 V	1400 mA	7 mA	260 mA	470 µF	74%	JCE0624S3V3
	5.0 V	1200 mA	7 mA	316 mA	470 µF	79%	JCE0624S05
	12.0 V	500 mA	7 mA	301 mA	100 µF	83%	JCE0624S12
	15.0 V	400 mA	7 mA	301 mA	100 µF	83%	JCE0624S15
	24.0 V	250 mA	10 mA	305 mA	47 µF	82%	JCE0624S24
	±3.3 V	±909 mA	7 mA	329 mA	±220 µF	76%	JCE0624D03
	±5.0 V	±600 mA	7 mA	312 mA	±220 µF	80%	JCE0624D05
	±12.0 V	±250 mA	10 mA	301 mA	±100 µF	83%	JCE0624D12
	±15.0 V	±200 mA	15 mA	298 mA	±100 µF	84%	JCE0624D15
	±24.0 V	±125 mA	20 mA	305 mA	±47 µF	82%	JCE0624D24
36-75 VDC	3.3 V	1400 mA	7 mA	128 mA	470 µF	76%	JCE0648S3V3
	5.0 V	1200 mA	7 mA	154 mA	470 µF	82%	JCE0648S05
	12.0 V	500 mA	7 mA	151 mA	100 µF	84%	JCE0648S12
	15.0 V	400 mA	7 mA	151 mA	100 µF	84%	JCE0648S15
	24.0 V	250 mA	7 mA	151 mA	47 µF	84%	JCE0648S24
	±3.3 V	±909 mA	7 mA	162 mA	±220 µF	78%	JCE0648D03
	±5.0 V	±600 mA	7 mA	154 mA	±220 µF	82%	JCE0648D05
	±12.0 V	±250 mA	7 mA	151 mA	±100 µF	84%	JCE0648D12
	±15.0 V	±200 mA	7 mA	151 mA	±100 µF	84%	JCE0648D15
	±24.0 V	±125 mA	15 mA	158 mA	±47 µF	80%	JCE0648D24

Notes

1. *When one output is set at 100% load and the other varies between 25% & 100% load.*
2. *Measured with 20 MHz bandwidth and 1 µF ceramic capacitor across output rails.*
3. *Input current specified at nominal 12 V, 24 V or 48 V input.*
4. *For optional 3000 VDC isolation add suffix -H to part number e.g. JCE0624S12-H*
5. *For optional metal case version add suffix -M to part number e.g. JCE0612S24-M*
6. *Maximum capacitive load is per output*
7. *For surge immunity, external input capacitor required, 220 µF/100 V. 24 V & 48 V input models are Perf Criteria A, 12 V input models are Perf Criteria B.*

Mechanical Details

Plastic Case

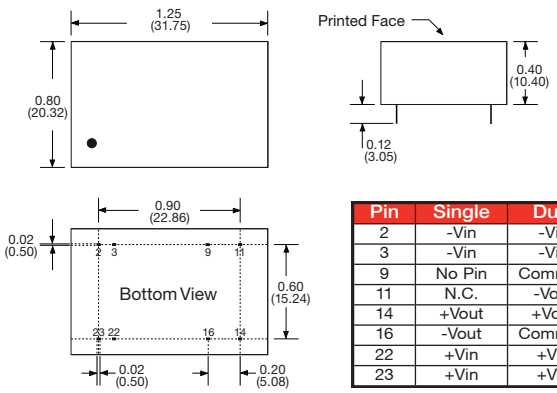

Pin	Single	Dual
2	-Vin	-Vin
3	-Vin	-Vin
9	No Pin	Common
11	N.C.	-Vout
14	+Vout	+Vout
16	-Vout	Common
22	+Vin	+Vin
23	+Vin	+Vin

Optional Metal Case

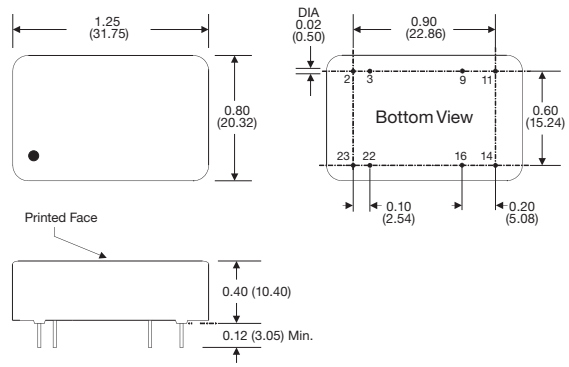

Notes

1. *All dimensions are in inches (mm)*
2. Weight: 0.03 lbs (13 g) for plastic case, 0.04 lbs (16.5 g) for metal case
3. Pin diameter: 0.02 ±0.002 (0.5 ±0.005)
4. Pin pitch and length tolerance: ±0.014 (±0.35)
5. Case tolerance: ±0.02 (±0.5)
6. Package: 24 pin DIL black plastic (UL94V-0) or optional nickel-coated copper.

Application Notes
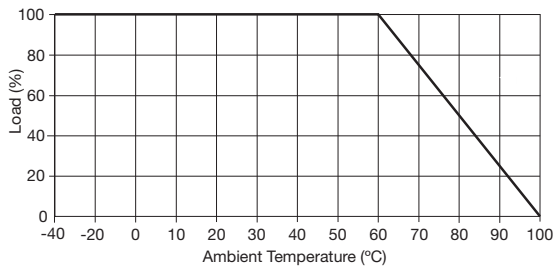
Derating Curve