AMPHENOL PCD SHENZHEN

EXCEL | MATE

High Voltage Safety Lock

www.amphenolpcd.com.cn

INDUSTRIAL@AMPHENOL TRUSTED GLOBALLY

TABLE OF CONTENT

EXCEL|MATE PRODUCT INTRODUCTION 2

Excel|Mate Plus (HVSL1200) 3
2 PIN RECEPTACLE BOX MOUNTED 4
2 PIN PLUG 6
2 PIN PLUG RIGHT ANGLE 7
HOW TO ORDER: HVSL1200 8
CHARTS: HVSL1200 9

Excel|Mate Plus (HVSL1000) 10
1 PIN RECEPTACLE 11
1 PIN PLUG 13
1 PIN RECEPTACLE WITHOUT INTERLOCK 14
1 PIN PLUG RIGHT ANGLE 15
2 PIN RECEPTACLE BOX MOUNTED 16
2 PIN PLUG 18
2 PIN PLUG RIGHT ANGLE 19
3 PIN RECEPTACLE BOX MOUNTED 20
3 PIN PLUG 21
3 PIN PLUG RIGHT ANGLE 22
ATTACHMENT 23
PRODUCT SERIES OVERVIEW 25
HOW TO ORDER: HVSL1000 26
CHARTS: HVSL1000 27

Excel|Mate S (HVSL800) 28
2 PIN RECEPTACLE 29
2 PIN STRAIGHT PLUG 30
2 PIN RIGHT ANGLE PLUG 31
3 PIN RECEPTACLE 32
3 PIN STRAIGHT PLUG 33
3 PIN RIGHT ANGLE PLUG 34
HOW TO ORDER: HVSL800 35
CHARTS: HVSL800 36

Excel|Mate Metal (HVSLS600) 37
2 PIN RECEPTACLE 38
2 PIN STRAIGHT PLUG 39
2 PIN RIGHT ANGLE PLUG 40
3 PIN RECEPTACLE 41
3 PIN STRAIGHT PLUG 42
3 PIN RIGHT ANGLE PLUG 43
HOW TO ORDER: HVSLS600 44
CHARTS: HVSLS600 45

Excel|Mate Metal (HVSLS800) 46
RECEPTACLE 47
STRAIGHT PLUG 48
RIGHT ANGLE PLUG 49
HOW TO ORDER: HVSLS800 50

Excel|Mate Eco (HVSL600/630/633/280/282/364)

HVSL600 51
RECEPTACLE 52
PLUG 54
HOW TO ORDER: HVSL600 55
CHARTS: HVSL600 56

HVSL630 57
RECEPTACLE 58
PLUG 60
HOW TO ORDER: HVSL630 61
CHARTS: HVSL630 62

HVSL633 63
RECEPTACLES 64
PLUG 68
HOW TO ORDER: HVSL633 69
CHARTS: HVSL633 70

HVSL280 71
RECEPTACLE 72
PLUG 74
HOW TO ORDER: HVSL280 75
CHARTS: HVSL280 76

HVSL282 77
RECEPTACLES 78
PLUG 83
HOW TO ORDER: HVSL282 84
CHARTS: HVSL282 85

HVSL362 86
RECEPTACLE 87
PLUG 89
HOW TO ORDER: HVSL362 90
CHARTS: HVSL362 91

HVSL364 92
RECEPTACLE 93
PLUG 95
HOW TO ORDER: HVSL364 96

Excel|Mate PT 97
1 POSITION 98
2 POSITION 101
3 POSITION 103
HVPT B 105
2 POSITION 106
3 POSITION 107
HVPT B 2A 108
HVPC 109
HVPC 800 112

PRODUCT INTRODUCTION

When high-performance and increased safety are required in xEV, Amphenol PCD's **Excel|Mate** connectors fulfil the challenge.

HVSL Series is designed to meet AK standards for various xEV applications, including power and signal interconnect solutions. Different versions are available, from 1 position to 4 positions and a rated current from 23A to 350A.

Product	HVSL1200	HVSL1000	HVSL800	HVSLS800	HVSLS600	HVSL600	HVSL630	HVSL633	HVSL280	HVSL282	HVSL362	HVSL364
Position	2	1, 2, 3	2, 3	2	2, 3	1	2	3	3	2	2	4
Rated Voltage	1000V	1000V	1000V	1000V	1000V	800V	800V	800V	800V	800V	800V	800V
Rated Current	350A	250A	180A	180A	120A	120A	40A	40A	23A	32A	60A	46A
HVIL	√	√	√	√	√	√	√	√	√	√	√	√
Shielding	√	√	√	√	√	√	√	√	√	√	√	√
Shell	Plastic	Plastic	Plastic	Metal	Metal	Plastic	Plastic	Plastic	Plastic	Plastic	Plastic	Plastic
IP67,IP6K9K	√	√	√	√	√	√	√	√	√	√	√	√
Touch-Proof IP2XB	√	√	√	√	√	√	√	√	√	√	√	√
Cable size mm^2	70 to 95	25 to 70	25 to 50	25 to 50	16 to 25	25	4 to 6	2.5 to 6	2.5 to 4	2.5 to 4	6 to 10	2.5 to 6
Cable type shielded wire	Individually	Individually	Individually	Individually	Individually	Individually	Multicore	Individually	Multicore	Individually	Individually	Individually

Excel|Mate (HVSL1200)

High Voltage Safety Lock

HVSL1200, which is the latest generation of the Excel|Mate series, has been specially designed for use in xEV applications.

The RADSOK® Technology R4 version 12mm and an interlock solution ensure a safe and reliable connection.

KEY FEATURES

- With interlock solution
- RADSOK® Technology R4 version 12mm
- Shielding performance: EMI/RFI 60DB
- Sealing, IP67 (mated), IP6K9K
- Touch-proof, IP2XB
- Multiple coding positions

APPLICATIONS	
xEV Battery	
Inverters	
Junction boxes	
Power distribution boxes	
MECHANICAL	
Durability	≥ 50 mating cycles
Wire range	70mm^2 to 95mm^2
ELECTRICAL	
Rated voltage	1000V DC
Rated current	350A Max @ ambient temperature 70°C
Insulator resistance	> 200MΩ
Dielectric withstand voltage	3000V AC
ENVIRONMENTAL	
Sealing	IP67, IP6K9K (mated)
Touch-proof	IP2XB
Temperature range	-40°C to 125°C
Inflammability	UL94V0
STANDARDS	
USCAR-2	
USCAR37	
LV-215	
RoHS	

2 PIN RECEPTACLE BOX MOUNTED

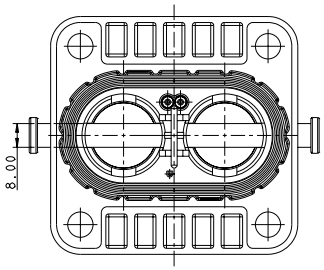

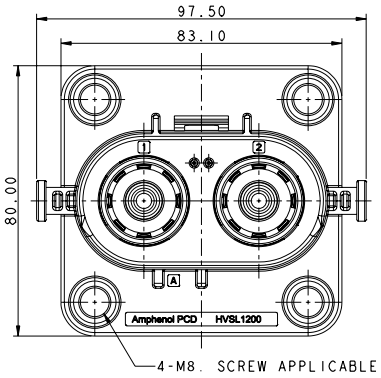

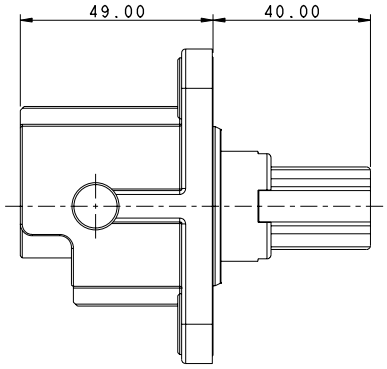

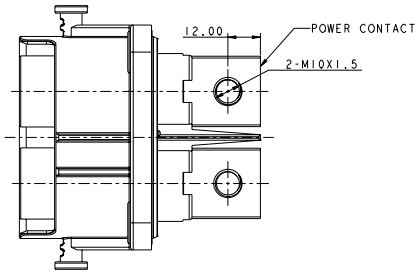

INSERT ORIENTATIONS

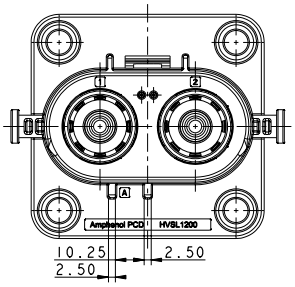

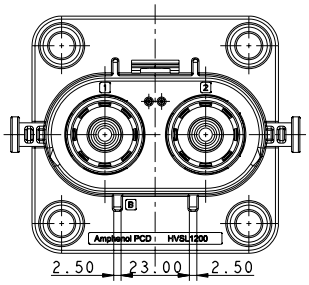

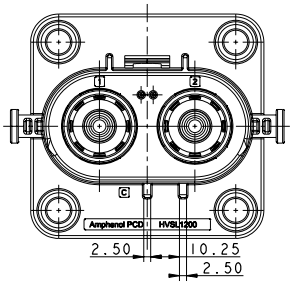

	A	B	C
P/N	HVSL1200 02 2 A	HVSL1200 02 2 B	HVSL1200 02 2 C

PANEL MOUNTING DIMENSIONS

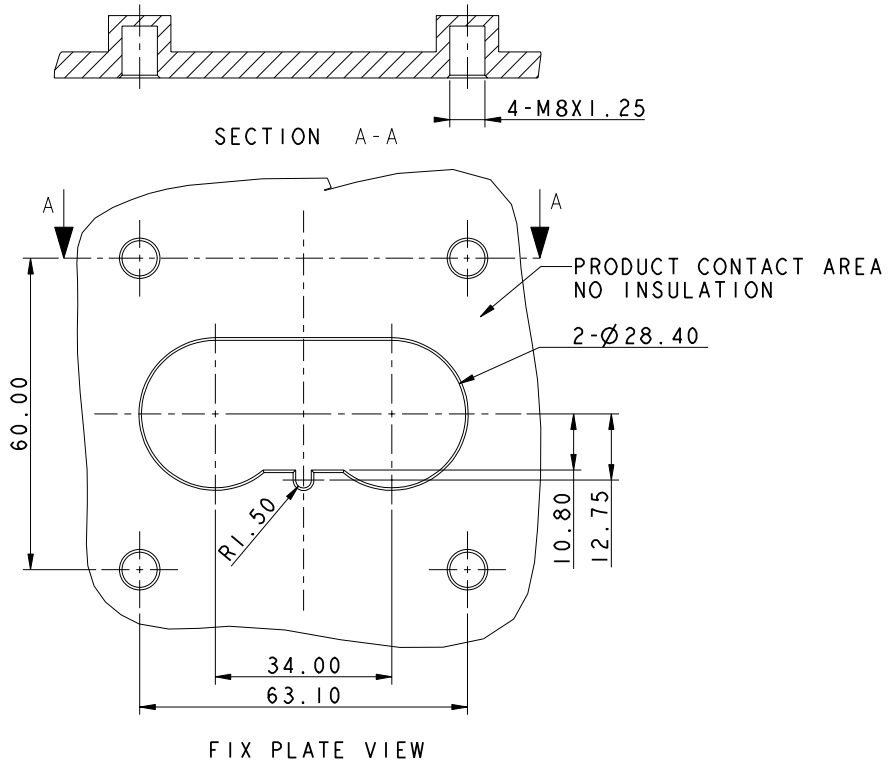

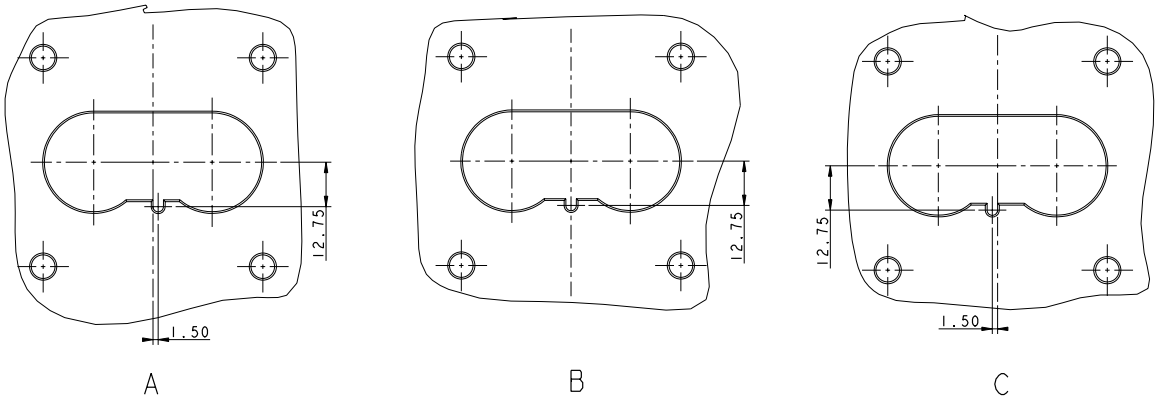

Excel|Mate Max (HVSL 1200)

2 PIN PLUG

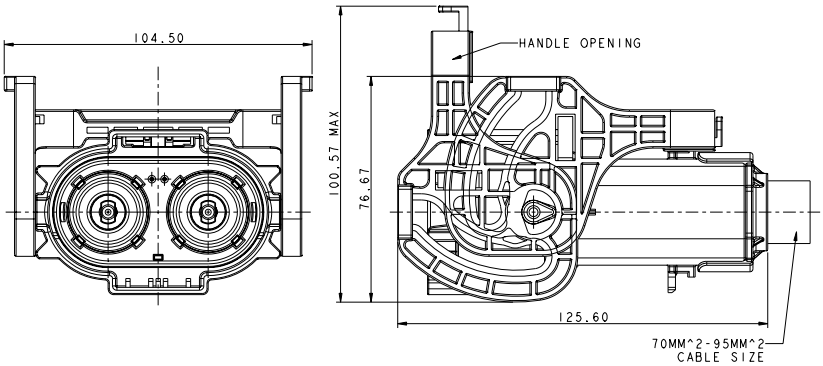

INSERT ORIENTATIONS

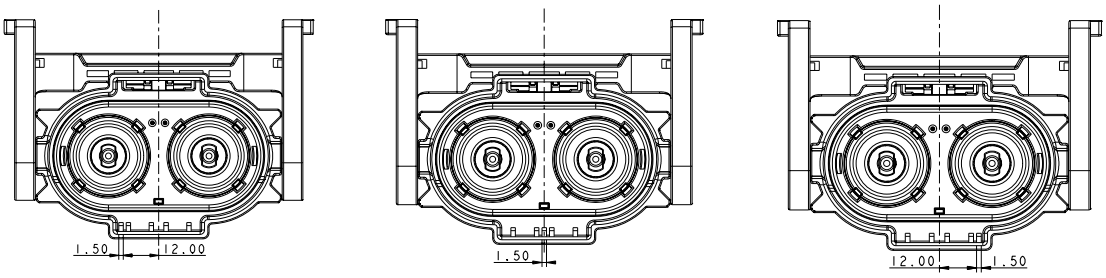

	A	B	C
P/N	HVSL1200 06 2 A	HVSL1200 06 2 B	HVSL1200 06 2 C

LEVER POSITION

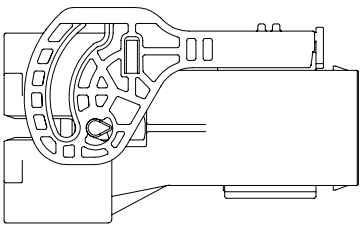

STANDARD LEVER

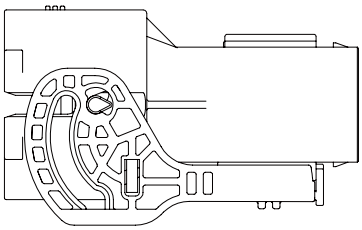

REVERSE LEVER

INSTALLATION CLEARANCE

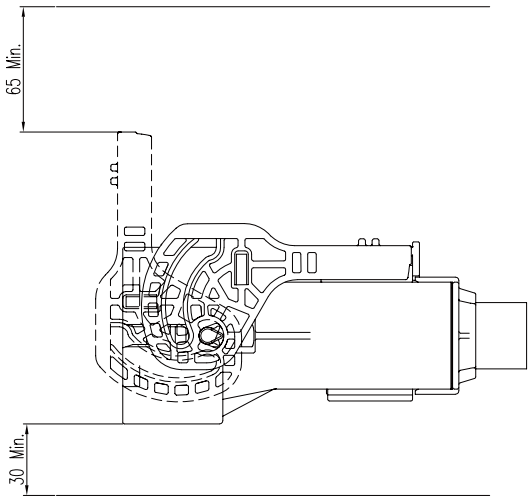

2 PIN PLUG RIGHT ANGLE

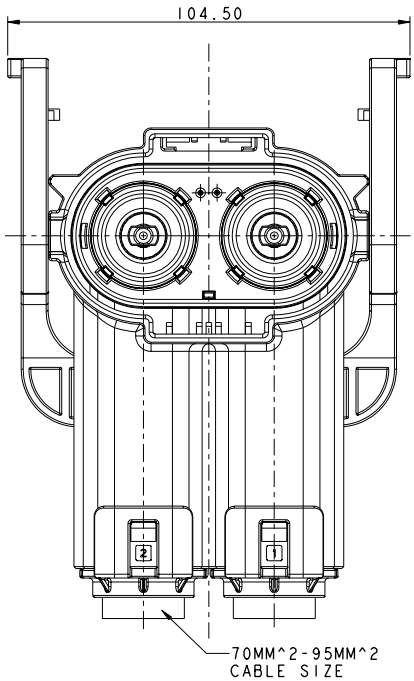

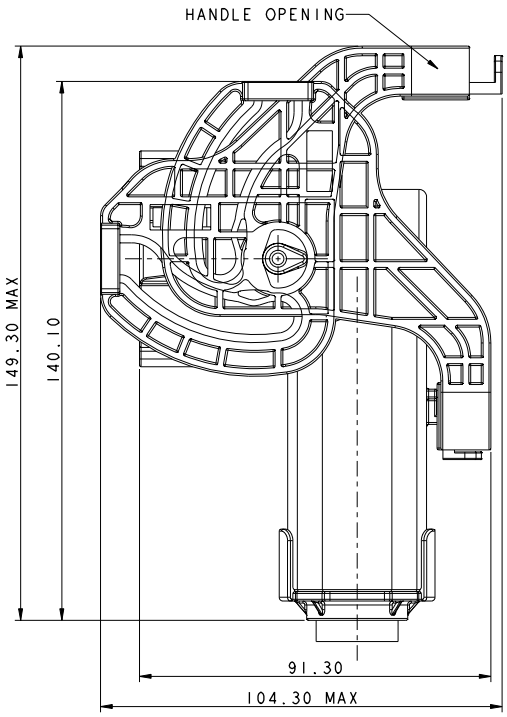

INSERT ORIENTATIONS

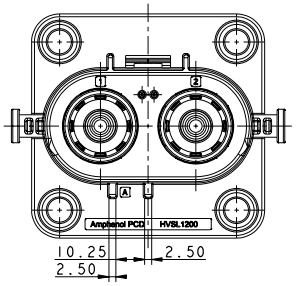

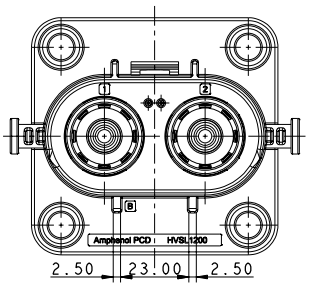

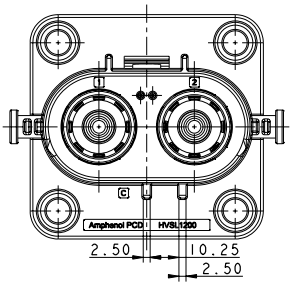

	A	B	C
P/N	HVSL1200 08 2 A	HVSL1200 08 2 B	HVSL1200 08 2 C

HOW TO ORDER (HVSL 1200)

HOW TO ORDER: PLUG

HVSL1200	06	2	A	0	70

Product type:
- **06:** Straight plug
- **08:** Right angle plug

Position:
- **2:** 2 position

Coding / Alternate position:
- **A:** Coding A
- **B:** Coding B
- **C:** Coding C

Interlock:
- **0:** Without interlock
- **1:** With interlock

Cable size:
- **70:** 70mm^2 cable
- **95:** 95mm^2 cable

HOW TO ORDER: RECEPTACLE

HVSL1200	02	2	A	0	H10

Product type:
- **02:** Box mounted receptacle

Position:
- **2:** 2 position

Coding / Alternate position:
- **A:** Coding A
- **B:** Coding B
- **C:** Coding C

Interlock:
- **0:** Without interlock
- **1:** With interlock

Cable size:
- **H10:** OT terminal

EXTRACTION TOOL FOR RECEPTACLE

HVIL-contact Extraction tool: HVTOOL10R

HVSL 1200 | Temperature Rise

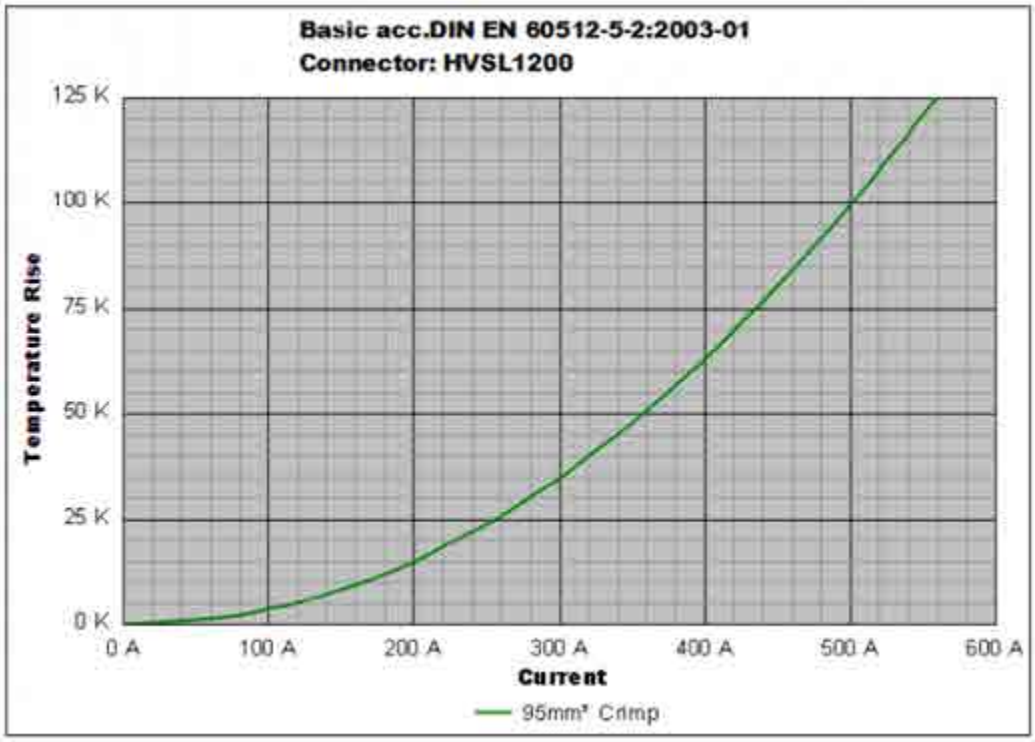

HVSL 1200 | Derating Curve

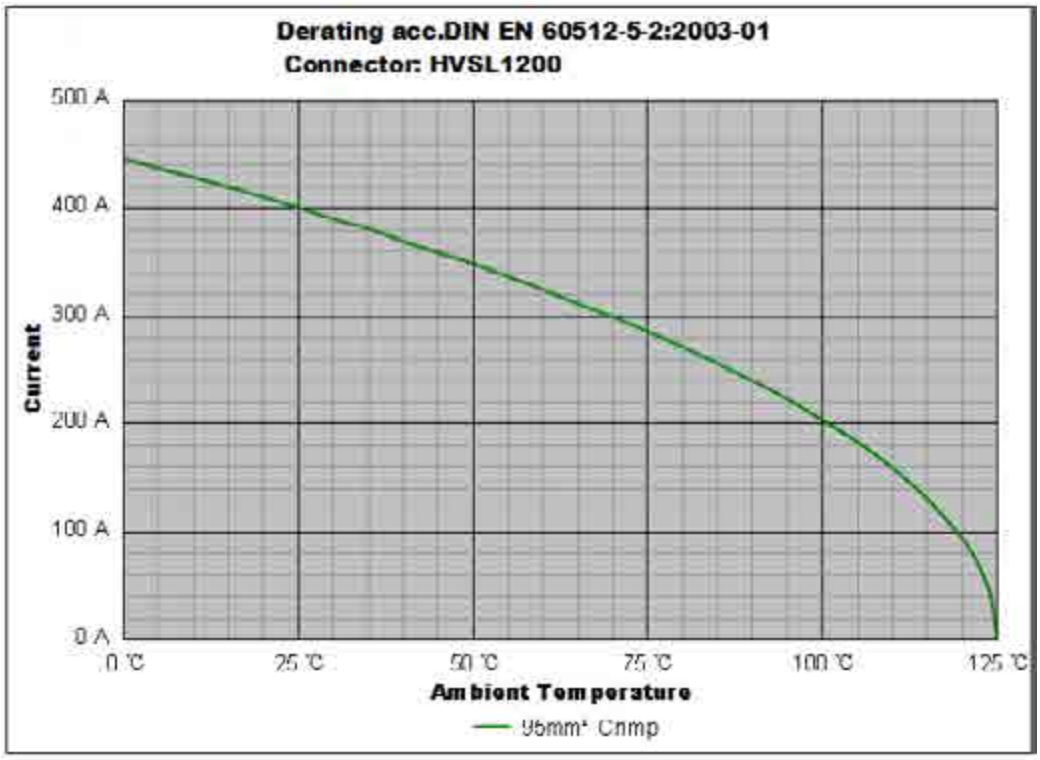

Remark: tests carried out on the complete connector.

Excel|Mate Plus (HVSL 1000)

Excel|Mate Plus

High Voltage Safety Lock

Excel|Mate Plus offers a max rated voltage up to 1000V and a max rated current of 250A. It can be used for power solutions in various xEV applications.

External HVIL for 1 position and internal HVIL for 2 to 3 positions.

KEY FEATURES

- With interlock solution
- RADSOK® Technology R4 version 10mm
- Shielding performance: EMI/RFI 60DB
- AK compliance LV215
- Sealing, IP67 (mated), IP6K9K
- 1 to 3 positions available
- Touch-proof, IP2XB
- Multiple coding positions

APPLICATIONS	
xEV Battery	
Inverters	
Junction boxes	
Power distribution boxes	
MECHANICAL	
Durability	≥ 50 mating cycles
Wire range	25 to 70 mm^2
ELECTRICAL	
Rated voltage	1000V DC
Rated current	250A Max @ ambient temperature 70°C
Insulator resistance	> 200MΩ
Dielectric withstand voltage	3000V AC
ENVIRONMENTAL	
Sealing	IP67, IP6K9K (mated)
Touch-proof	IP2XB
Temperature range	-40°C to 125°C
Inflammability	UL94V0
STANDARDS	
USCAR-2	
USCAR-37	
LV-215	
RoHS	

RECEPTACLE IN-LINE

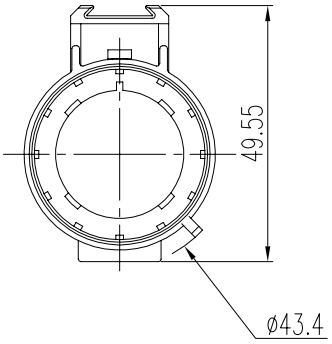

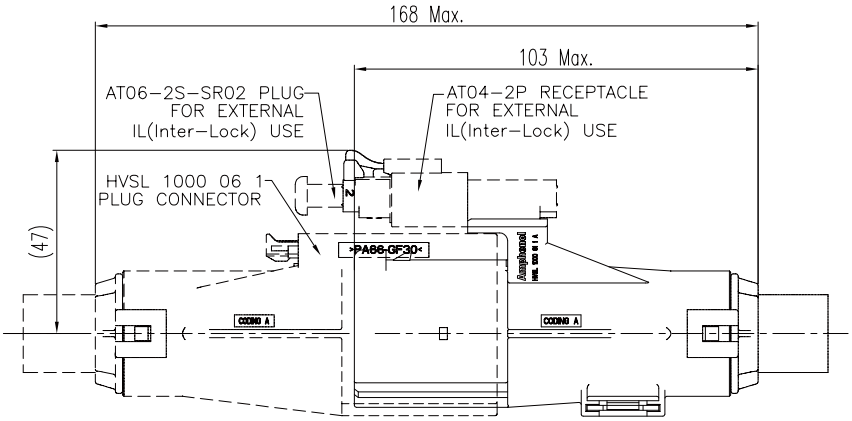

MOUNTED GROOVE

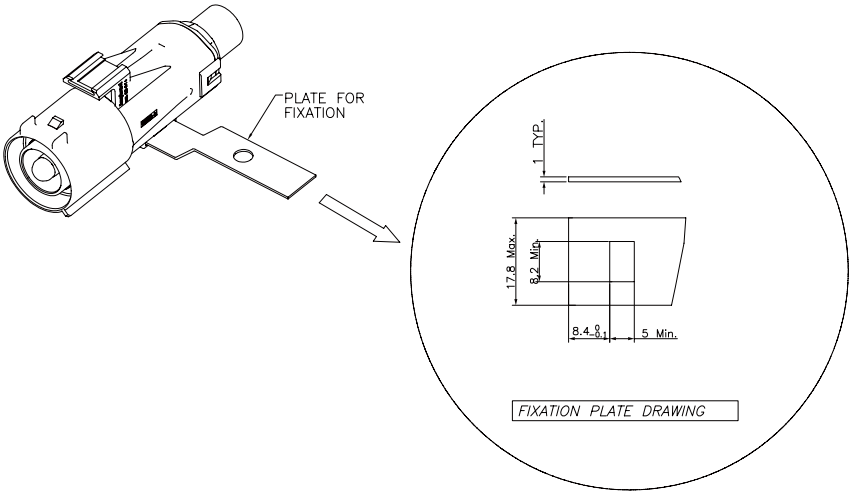

INSERT ORIENTATIONS

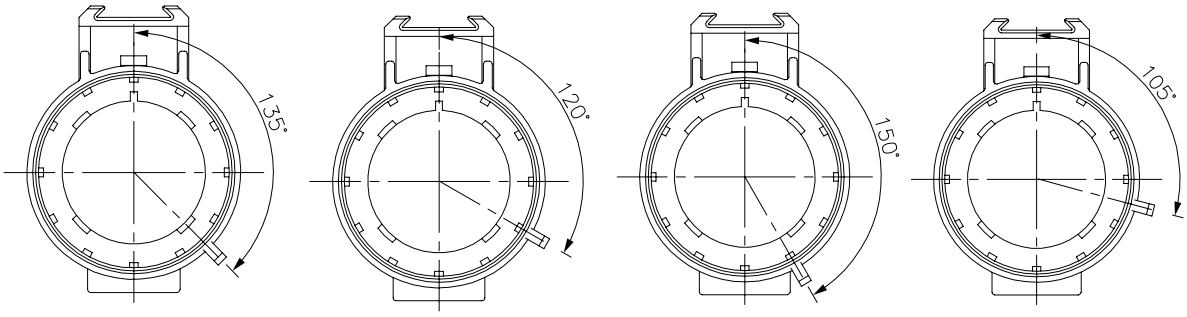

	Coding A	Coding B	Coding C	Coding D
P/N	HVSL1000 01 1 A	HVSL1000 01 1 B	HVSL1000 01 1 C	HVSL1000 01 1 D

RECEPTACLE BOX MOUNTED

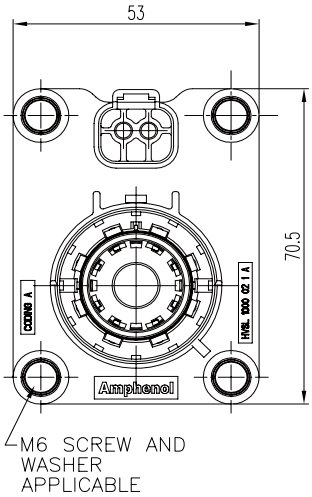

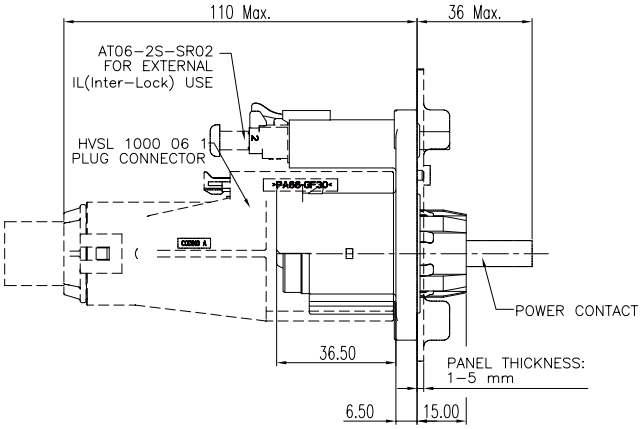

PANEL MOUNTING DIMENSIONS

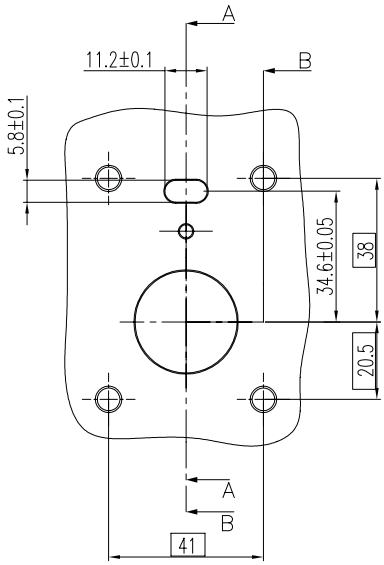

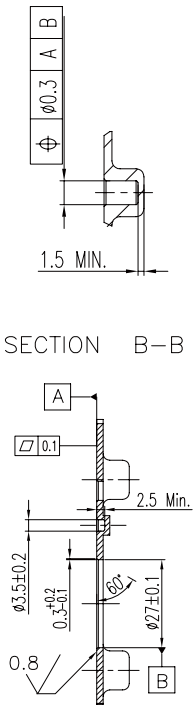

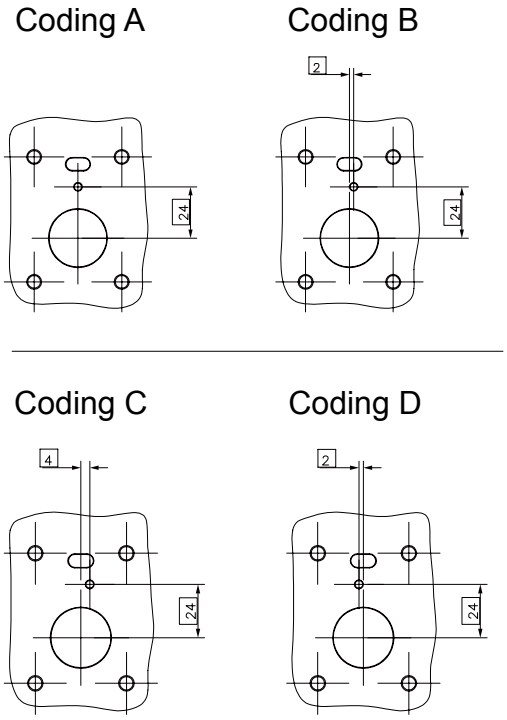

INSERT ORIENTATIONS

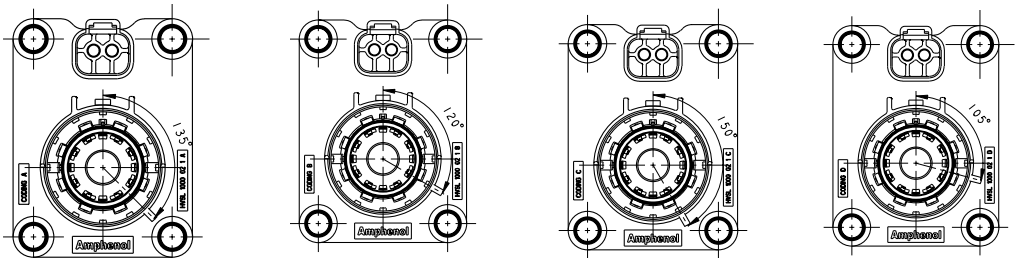

	Coding A	Coding B	Coding C	Coding D
P/N	HVSL1000 02 1 A	HVSL1000 02 1 B	HVSL1000 02 1 C	HVSL1000 02 1 D

PLUG

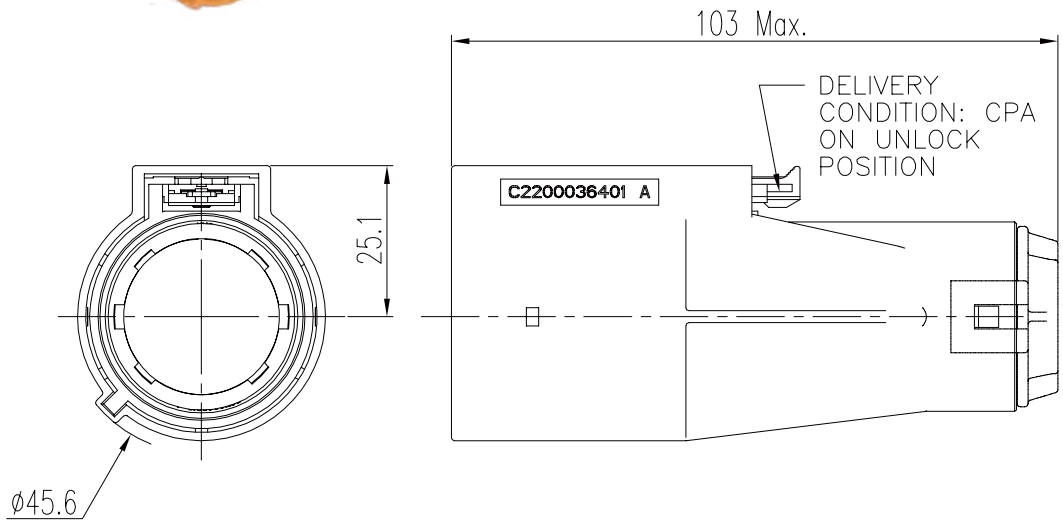

INSERT ORIENTATIONS

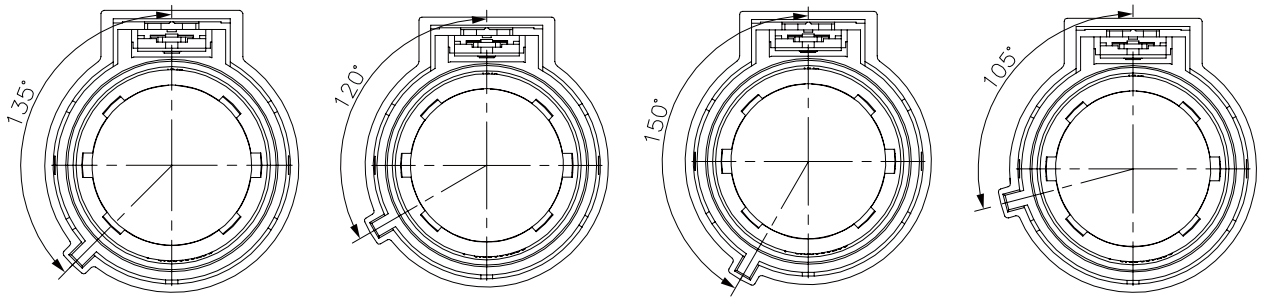

	Coding A	Coding B	Coding C	Coding D
P/N	HVSL1000 06 1 A	HVSL1000 06 1 B	HVSL1000 06 1 C	HVSL1000 06 1 D

RECEPTACLE BOX MOUNTED **WITHOUT INTERLOCK**

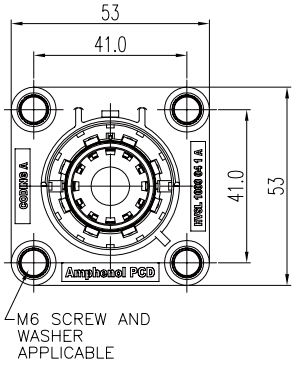

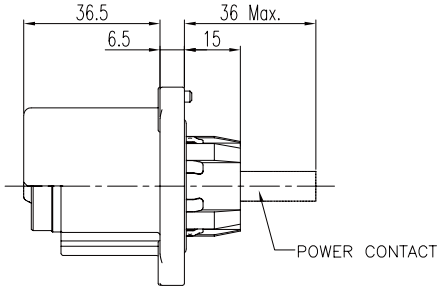

INSERT ORIENTATIONS

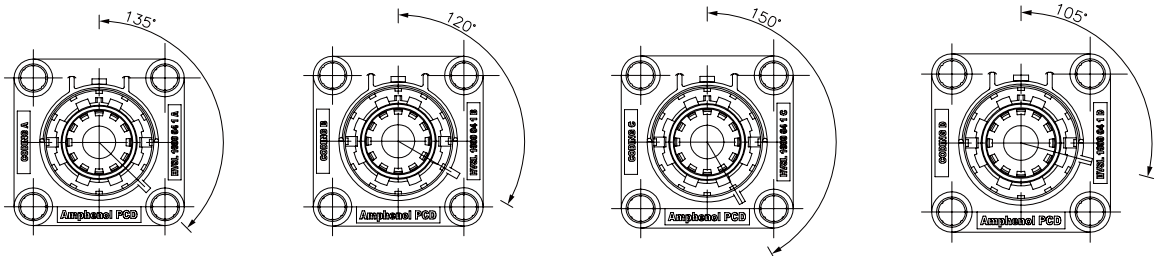

	Coding A	Coding B	Coding C	Coding D
P/N	HVSL1000 04 1 A	HVSL1000 04 1 B	HVSL1000 04 1 C	HVSL1000 04 1 D

PANEL MOUNTING DIMENSIONS

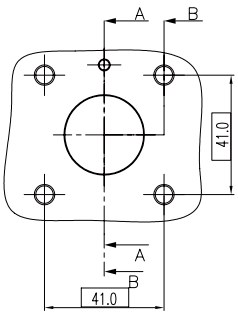

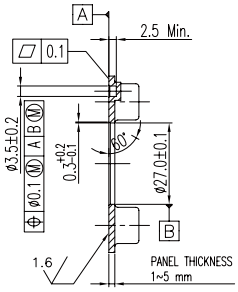

SECTION A–A

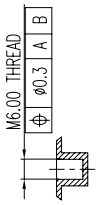

SECTION B–B

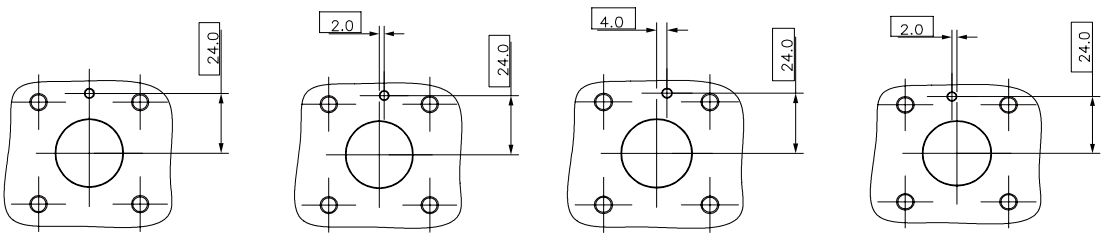

Coding A	Coding B	Coding C	Coding D

PLUG RIGHT ANGLE

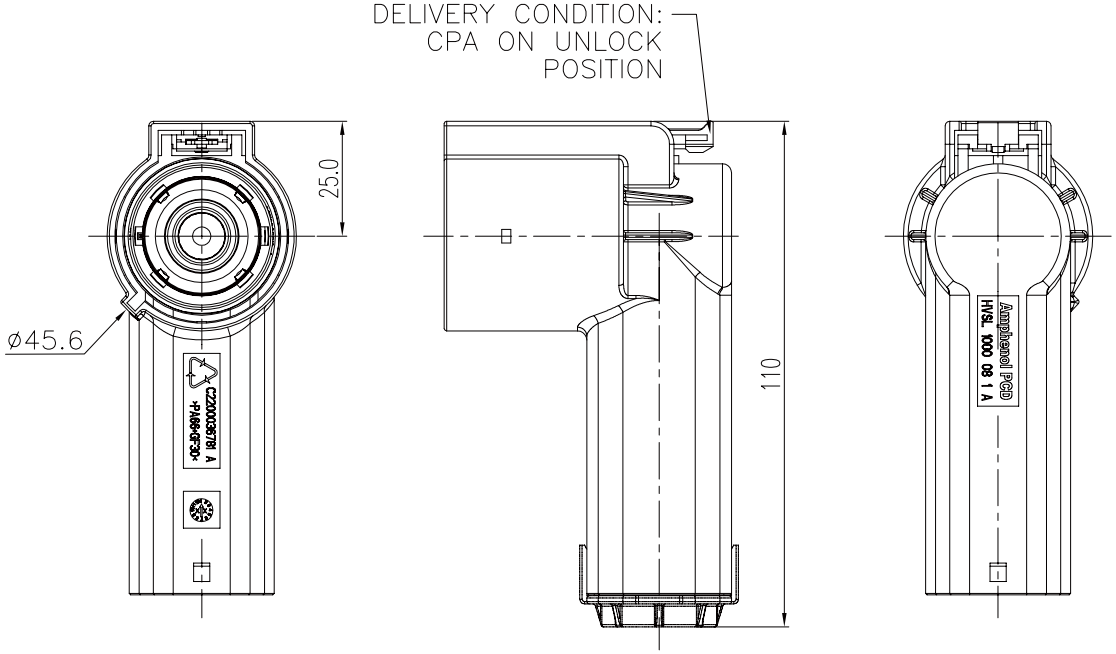

INSERT ORIENTATIONS

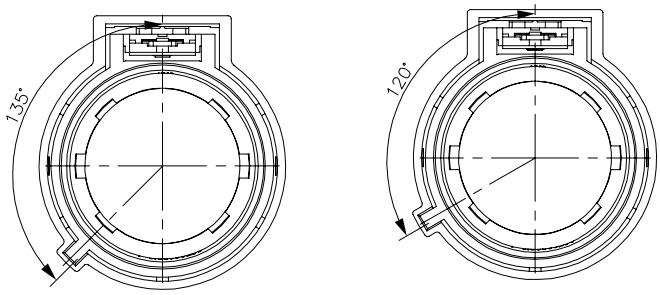

	Coding A	Coding B
P/N	HVSL1000 08 1 A	HVSL1000 08 1 B

2 PIN RECEPTACLE BOX MOUNTED

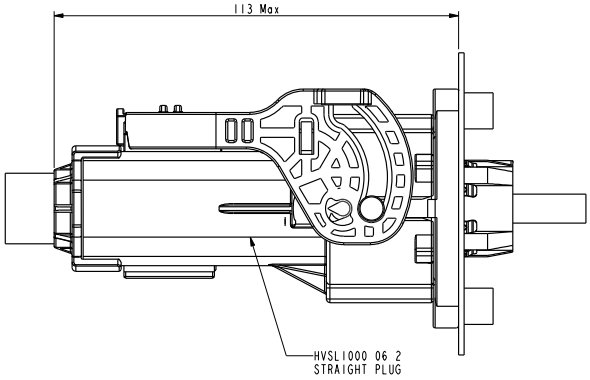

CONNECTOR MATED OUTLINE

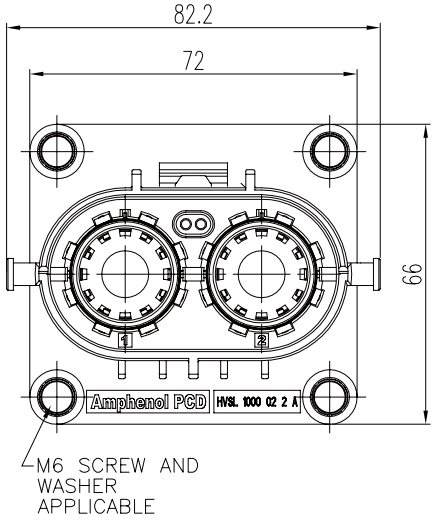

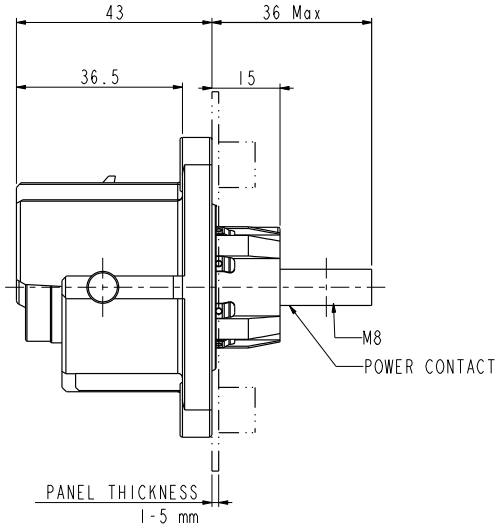

INSERT ORIENTATIONS

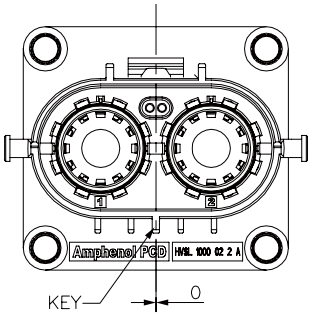

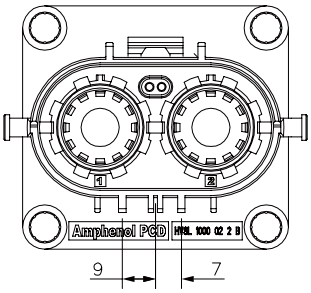

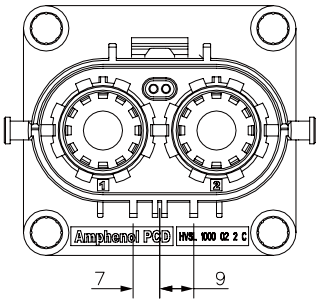

	Coding A	Coding B	Coding C
P/N	HVSL1000 02 2 A	HVSL1000 02 2 B	HVSL1000 02 2 C

PANEL MOUNTING DIMENSIONS

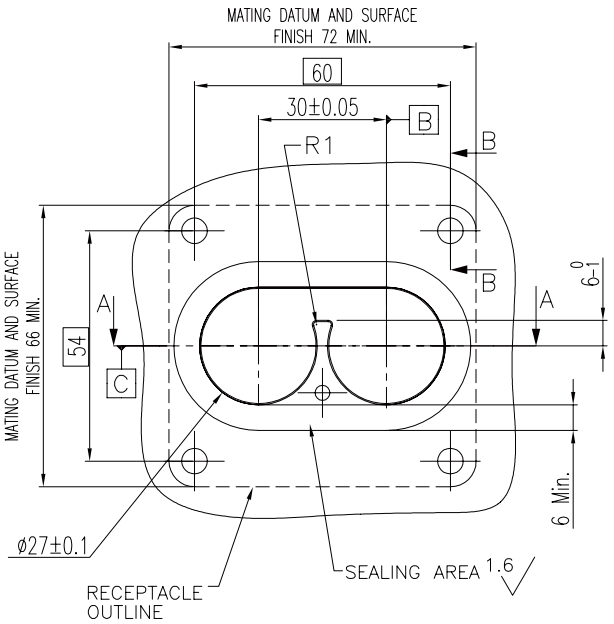

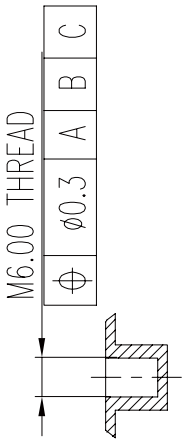

SECTION B–B

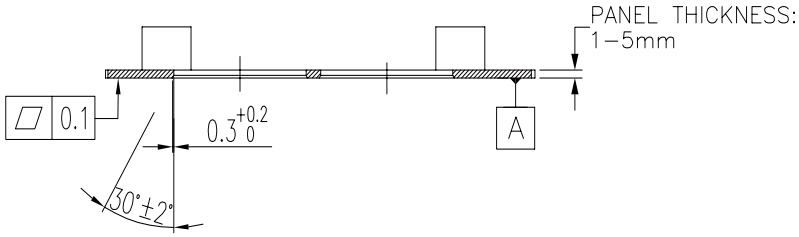

SECTION A–A

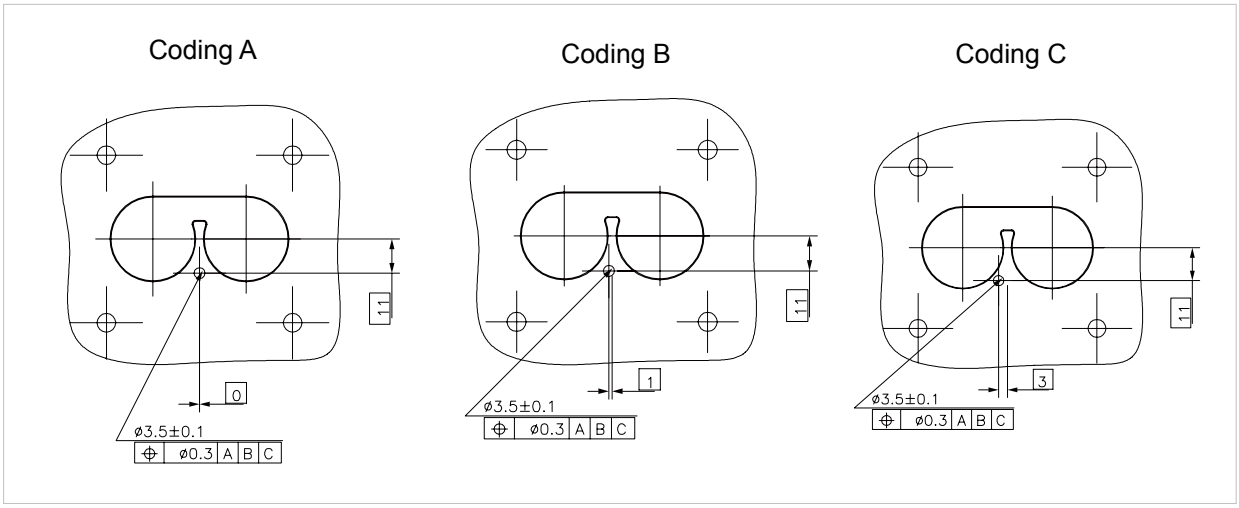

2 PIN PLUG

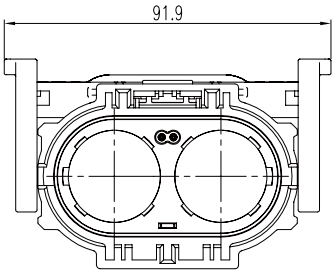

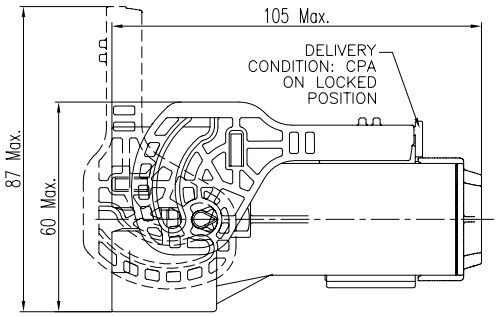

INSERT ORIENTATIONS

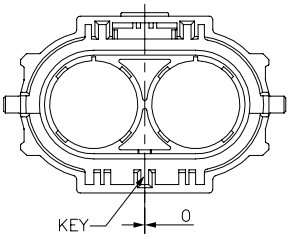

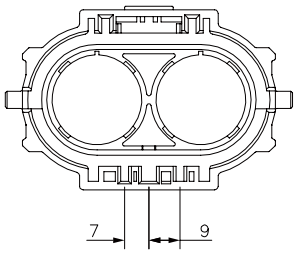

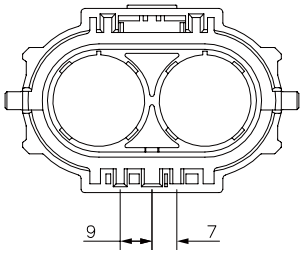

	Coding A	Coding B	Coding C
P/N	HVSL1000 06 2 A	HVSL1000 06 2 B	HVSL1000 06 2 C

LEVER POSITION

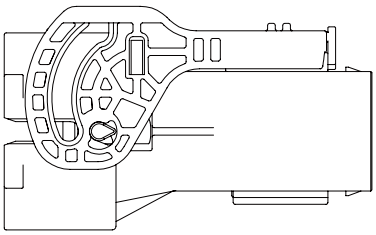

STANDARD LEVER

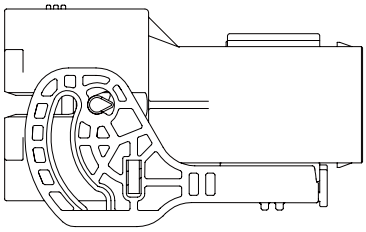

REVERSE LEVER

INSTALLATION CLEARANCE

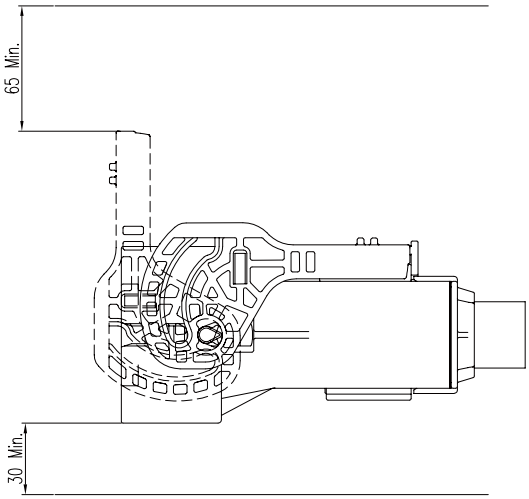

2 PIN PLUG RIGHT ANGLE

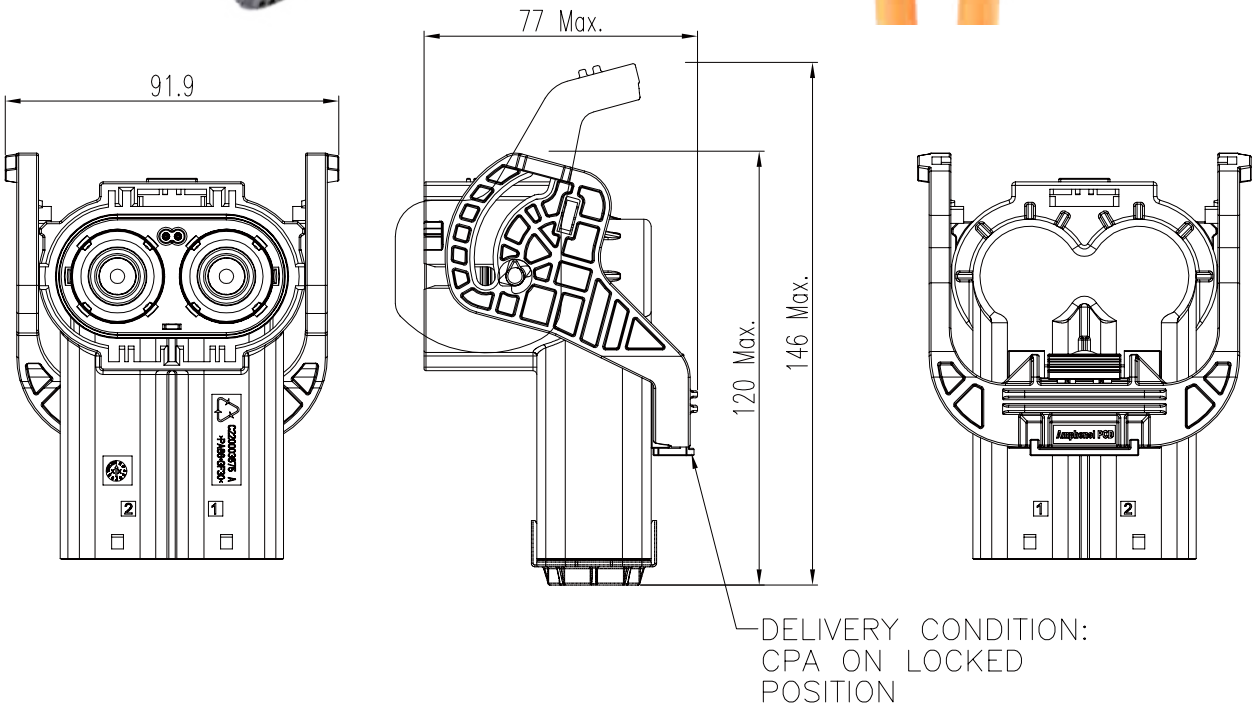

INSERT ORIENTATIONS

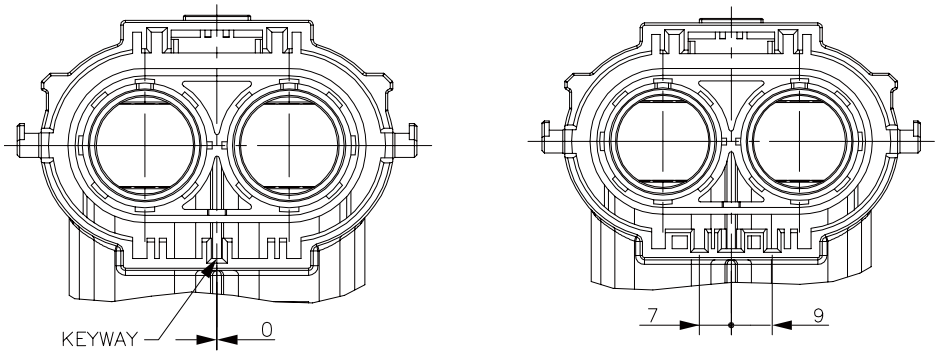

	Coding A	Coding B
P/N	HVSL1000 08 2 A	HVSL1000 08 2 B

3 PIN RECEPTACLE BOX MOUNTED

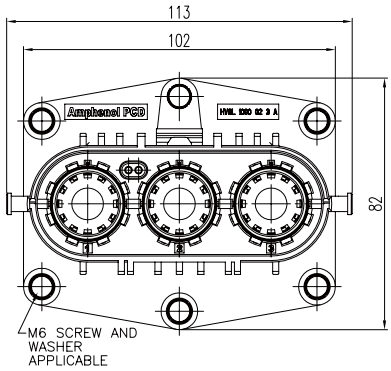

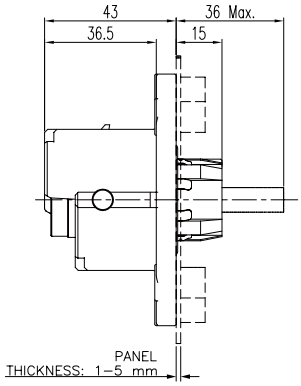

INSERT ORIENTATIONS

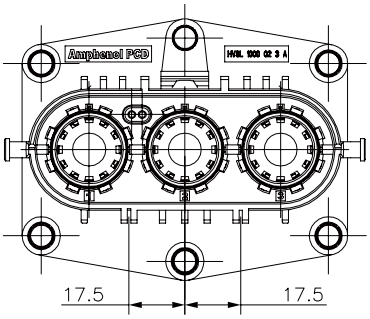

	Coding A
P/N	HVSL1000 02 3 A

PANEL MOUNTING DIMENSIONS

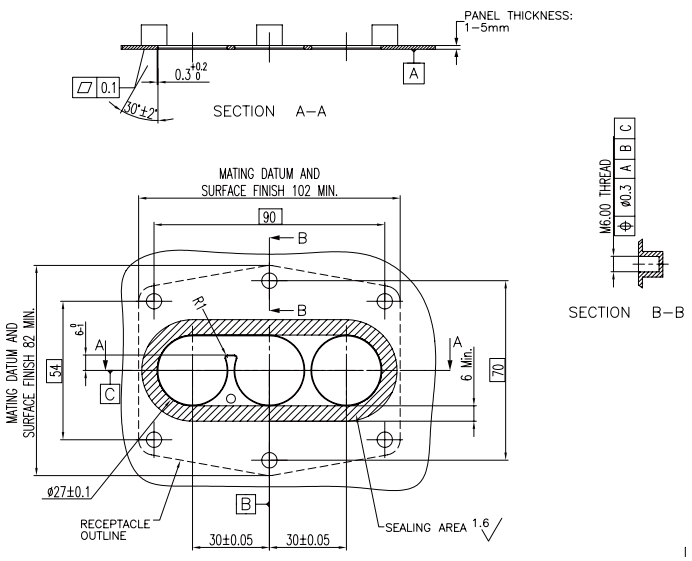

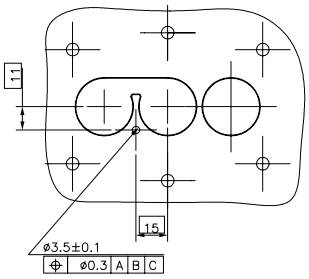

Coding A

3 PIN PLUG

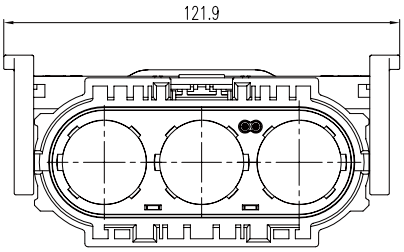

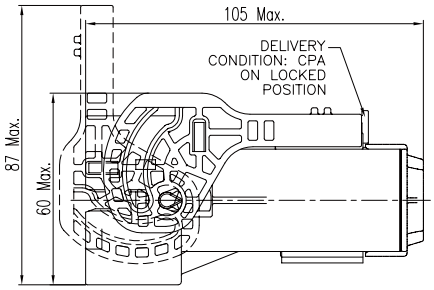

INSERT ORIENTATIONS

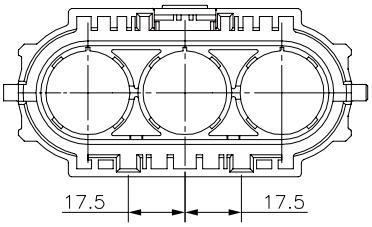

	Coding A
P/N	HVSL1000 06 3 A

LEVER POSITION

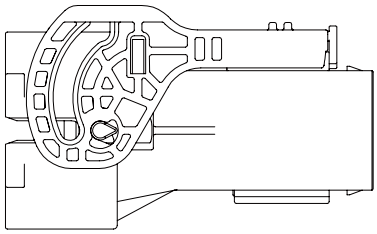

STANDARD LEVER

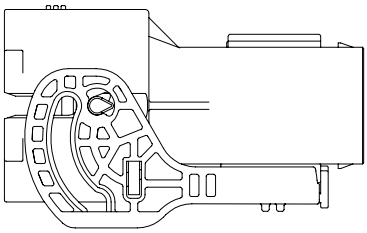

REVERSE LEVER

INSTALLATION CLEARANCE

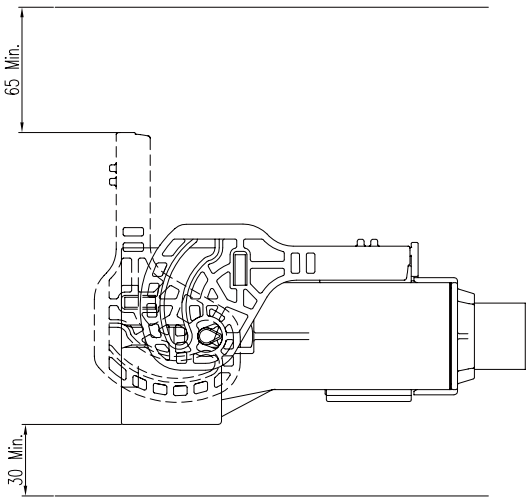

3 PIN PLUG RIGHT ANGLE

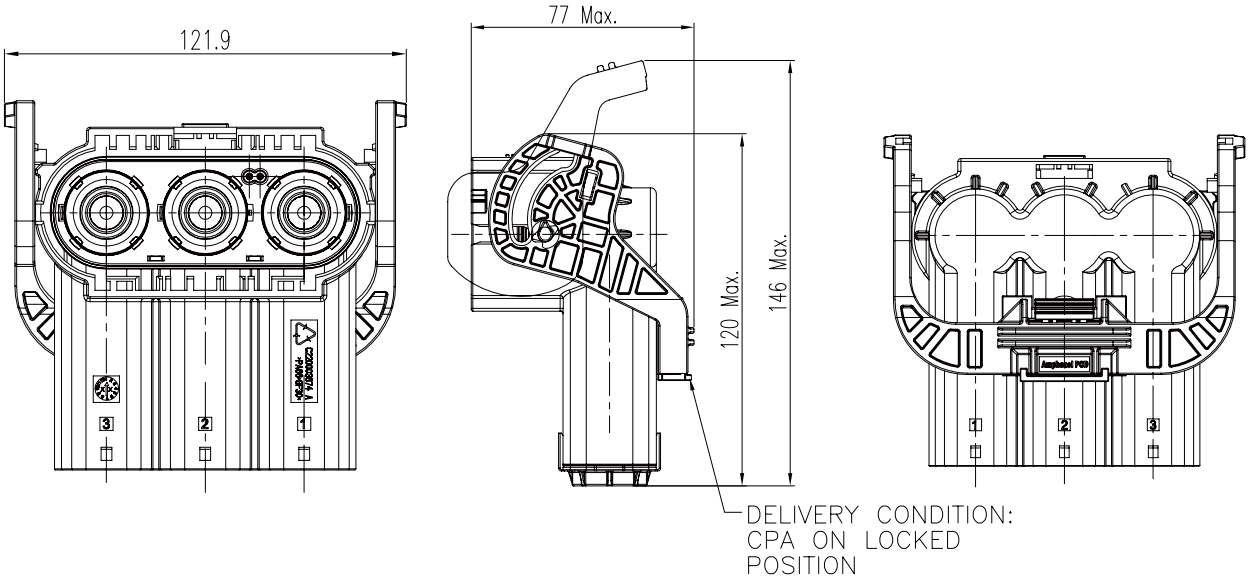

INSERT ORIENTATIONS

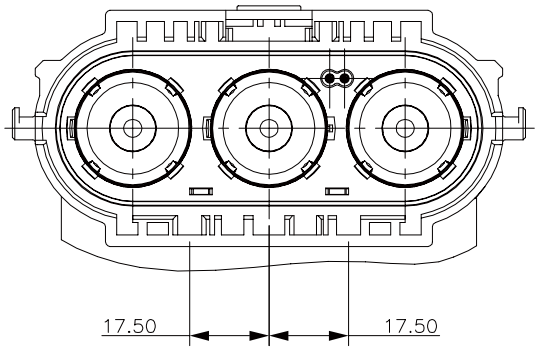

	Coding A
P/N	HVSL1000 08 3 A

ATTACHMENT: CONTACTS FOR RECEPTACLE

All connectors include contacts. For extra contacts, please order them separately (ref: P/N below)

Name	Contact P/N & Wire Size	Drawing
1 Pin Box mounted receptacle for Interlock	C42000400504G 0.5mm^2 max wire	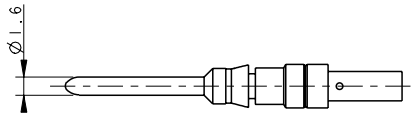
2 or 3 pin for Interlock	C200003609 0.5mm^2 max wire	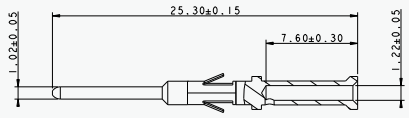
Power contact Thread for Bus-bar	C4200036152	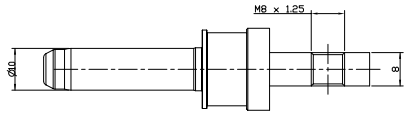
Power contact Crimp for wire	C42000361511 - 70mm^2 wire C42000361512 - 50mm^2 wire C42000361513 - 35mm^2 wire C42000361514 - 25mm^2 wire	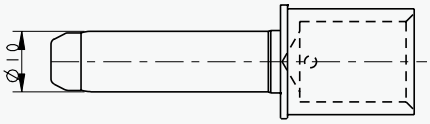
1 Pin: In-line receptacle for Interlock	AT60-16-0622 0.5mm^2 max wire	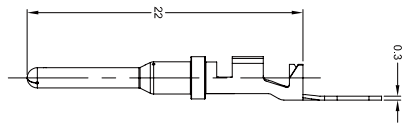
	AT04-2P-SR02BLK 0.5mm^2 max wire	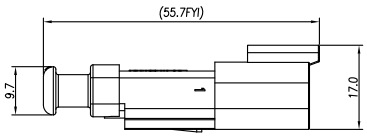
	AW2P	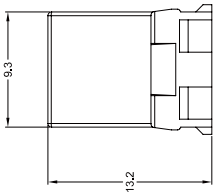

CONTACTS FOR RECEPTACLE

ATTACHMENT:CONTACTS FOR PLUG

All connectors include contacts. For extra contacts, please order them separately (ref: P/N below)

Name	Contact P/N & Wire Size	Drawing
1 Pin HVIL plug	C210003610	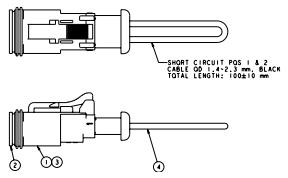
1 Pin (For In-line plug) Rope for Interlock	C210003608 (Order with HVIL plug)	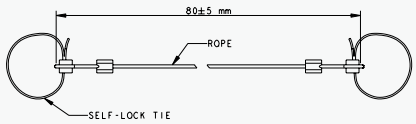
1 Pin (For R/A plug) Rope for Interlock	C210003611 (Order with HVIL plug)	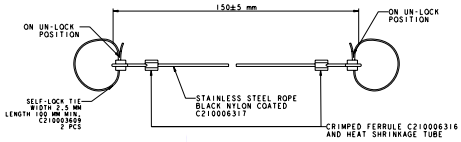
Socket contact	C4200036161 - 70mm^2 wire C4200036162 - 50mm^2 wire C4200036163 - 35mm^2 wire C4200036164 - 25mm^2 wire	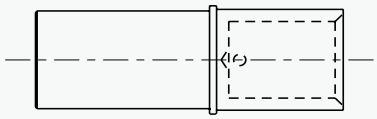
Kit of socket insert For plug	C4220036011 - 70mm^2 wire C4220036012 - 50mm^2 wire C4220036013 - 35mm^2 wire C4220036014 - 25mm^2 wire	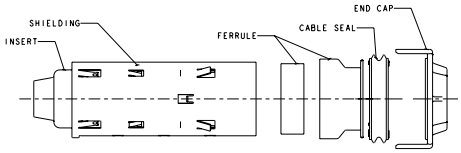
Kit of socket insert For receptacle in-line	C4220036021 - 70mm^2 wire C4220036022 - 50mm^2 wire C4220036023 - 35mm^2 wire C4220036024 - 25mm^2 wire	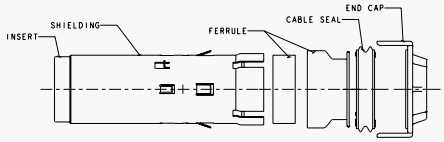
Power contact - rear Crimp for wire for right angle plug	C4220036031 - 70mm^2 wire C4220036032 - 50mm^2 wire C4220036033 - 35mm^2 wire C4220036034 - 25mm^2 wire	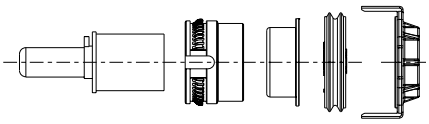

HVSL 1000 | PRODUCT SERIES OVERVIEW

Single pin
(HVIL External)

In-line receptacle

In-line plug

Single pin
(Without HVIL)

2 pin
(HVIL Integrated)

3 pin
(HVIL Integrated)

HOW TO ORDER (HVSL 1000)

HOW TO ORDER: PLUG

HVSL1000	06	1	A	0	35

Product type:
06: Straight plug | **08:** Right angle plug

Position:
1: 1 position | **2:** 2 position | **3:** 3 position

Coding / Alternate position:
A: Coding A
B: Coding B (Only for 2 & 3 positions)
C: Coding C (Only for 2 & 3 positions)
D: Coding D (Only for 1 position)

Interlock:
0: Without interlock | **1:** With interlock

Cable size:
25: 25mm^2 cable | **35:** 35mm^2 cable | **50:** 50mm^2 cable | **70:** 70mm^2 cable

HOW TO ORDER: RECEPTACLE

HVSL1000	01	1	A	0	H8

Product type:
01: In-line receptacle
02: Box mounted receptacle
04: Box mounted receptacle without Interlock

Position:
1: 1 position | **2:** 2 position | **3:** 3 position

Coding / Alternate position:
A: Coding A
B: Coding B (Only for 2 & 3 positions)
C: Coding C (Only for 2 & 3 positions)
D: Coding D (Only for 1 position)

Interlock:
0: Without interlock | **1:** With interlock

Cable size:
H8: OT terminal

EXTRACTION TOOL FOR RECEPTACLE

HVIL-contact Extraction tool: HVTOOL10R

HVSL 1000 | Temperature Rise

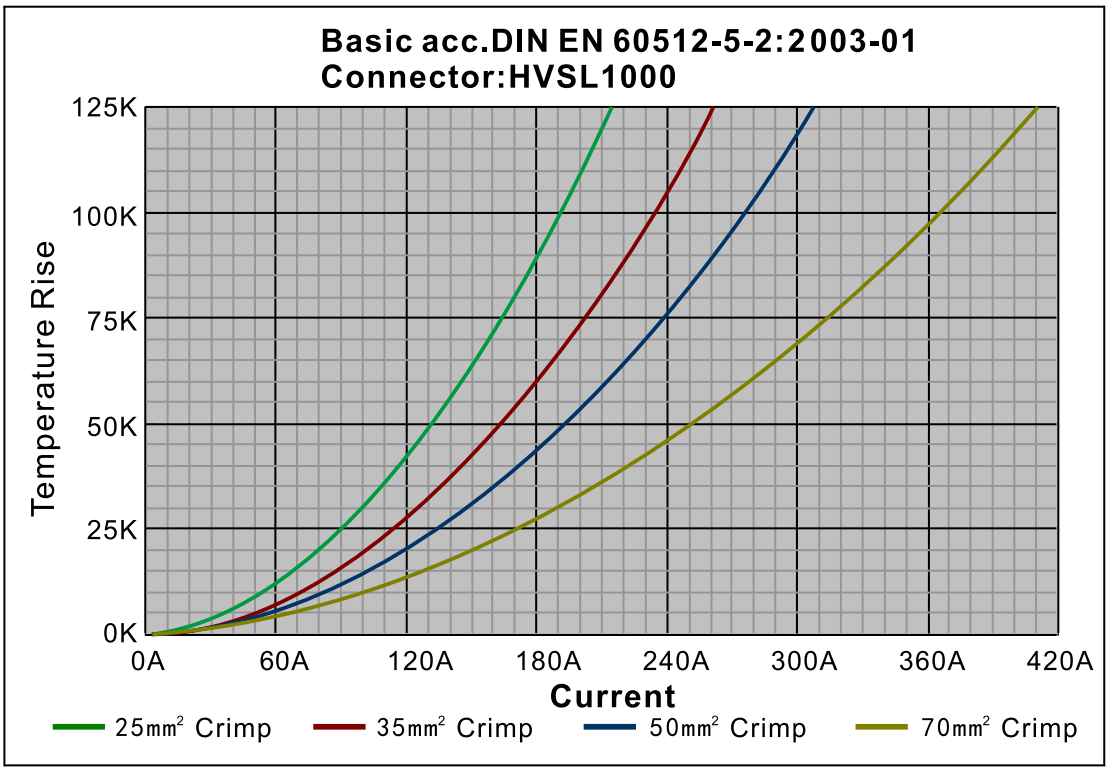

HVSL 1000 | Derating Curve

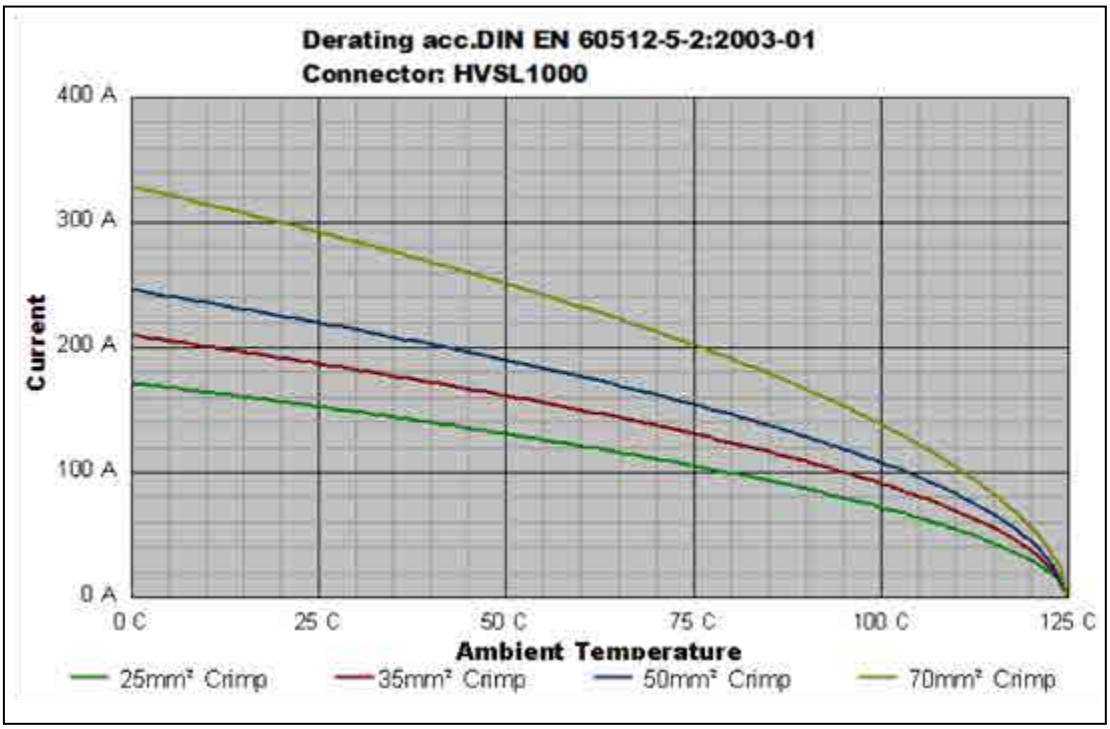

Remark: tests carried out on the complete connector.

Excel|Mate S (HVSL 800)

Excel|Mate S

Excel|Mate S

Excel|Mate S is a 2 pin and 3 pin connector with a current carrying capacity from 120 to 180A and 25 to 50 mm^2 crimping cable.

Specially designed for battery, inverters, junction boxes, power distribution boxes and others xEV devices' equipment.

KEY FEATURES

- Integrated internal HVIL
- Current rating up to 180A
- No tool required to unmate
- Sealing, IP67 , IP6K9K
- Touch-proof, IP2XB
- Multiple coding positions
- CPA available

MECHANICAL	
Durability	≥ 50 mating cycles
Wire range	25 to 50 mm^2 shielded wire
Insertion and extraction force	< 100N
Connection type	Copper bar
HVIL	Integrated
CPA	CPA
ELECTRICAL	
Rated voltage	1000V DC
Rated current	Max 180A @ ambient temperature 70°C
Insulator resistance	> 200MΩ
Dielectric withstand voltage	3000V AC
Shielding	360° from wire to device
ENVIRONMENTAL	
Sealing	IP67, IP6K9K (mated)
Touch-proof	IP2XB
Temperature range	-40°C to 125°C

2 PIN RECEPTACLE

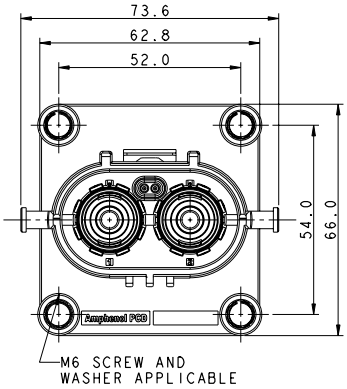

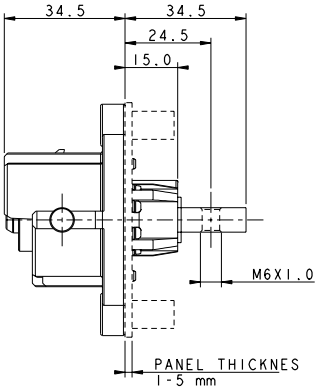

POWER CONTACT
HOLE TERMINATION

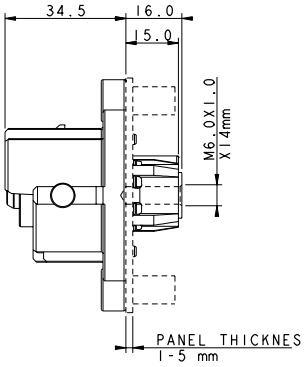

POWER CONTACT
SCREW TERMINATION-INTERMAL

INSERT ORIENTATIONS

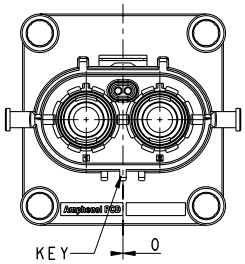

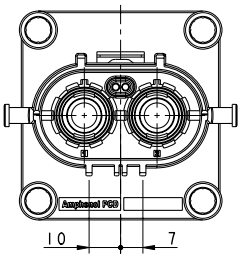

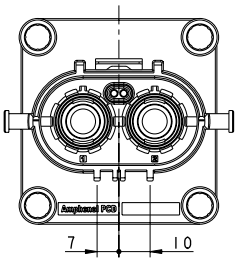

	Coding A	Coding B	Coding C
P/N	HVSL800 02 2 A	HVSL800 02 2 B	HVSL800 02 2 C

2 PIN STRAIGHT PLUG

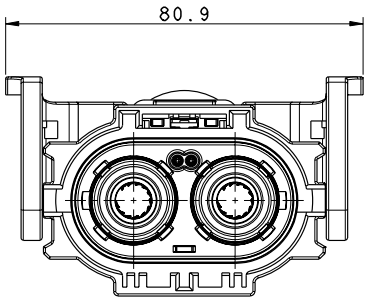

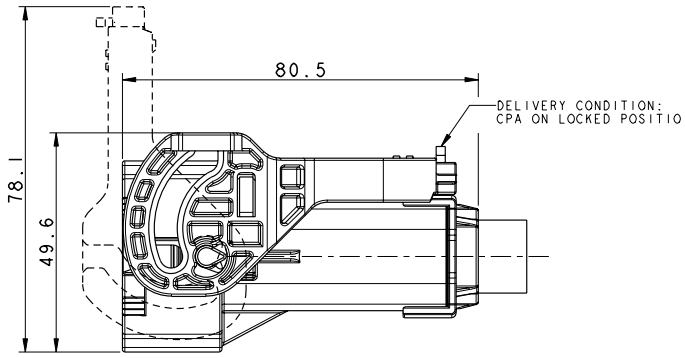

INSERT ORIENTATIONS

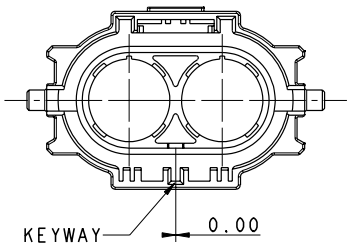

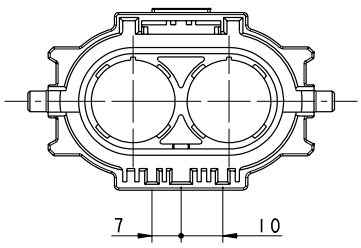

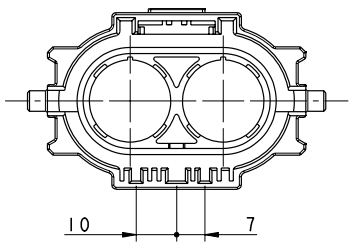

	Coding A	Coding B	Coding C
P/N	HVSL800 06 2 A	HVSL800 06 2 B	HVSL800 06 2 C

2 PIN RIGHT ANGLE PLUG

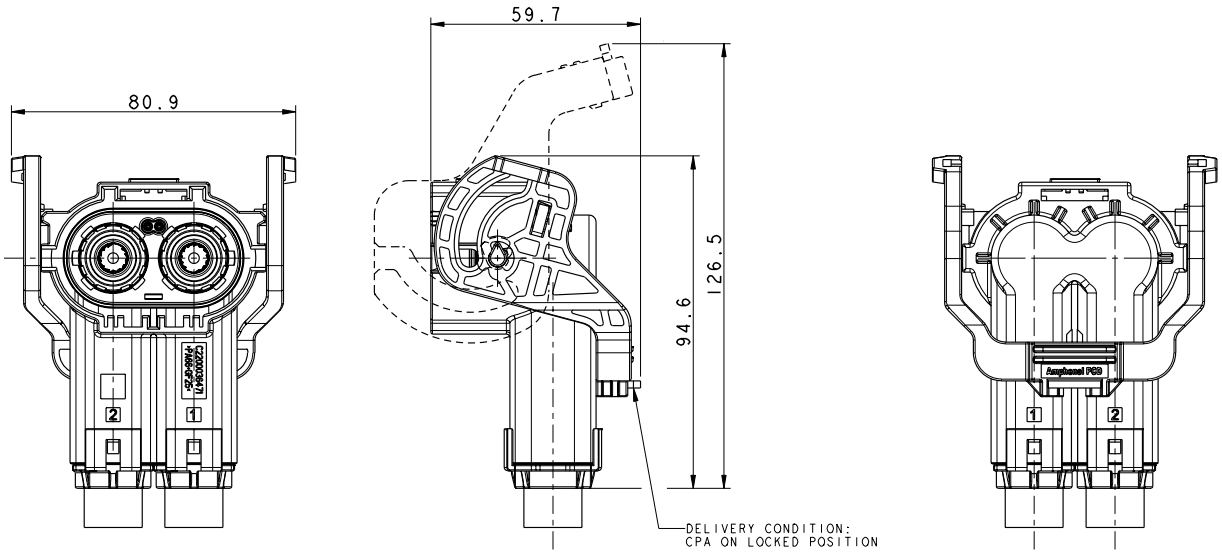

INSERT ORIENTATIONS

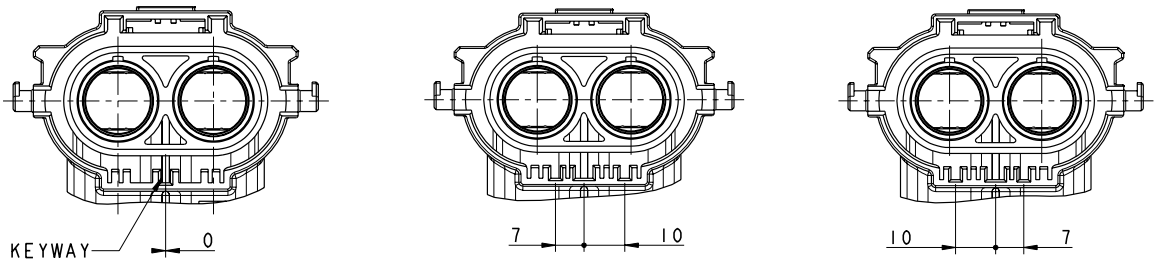

	Coding A	Coding B	Coding C
P/N	HVSL800 08 2 A	HVSL800 08 2 B	HVSL800 08 2 C

3 PIN RECEPTACLE

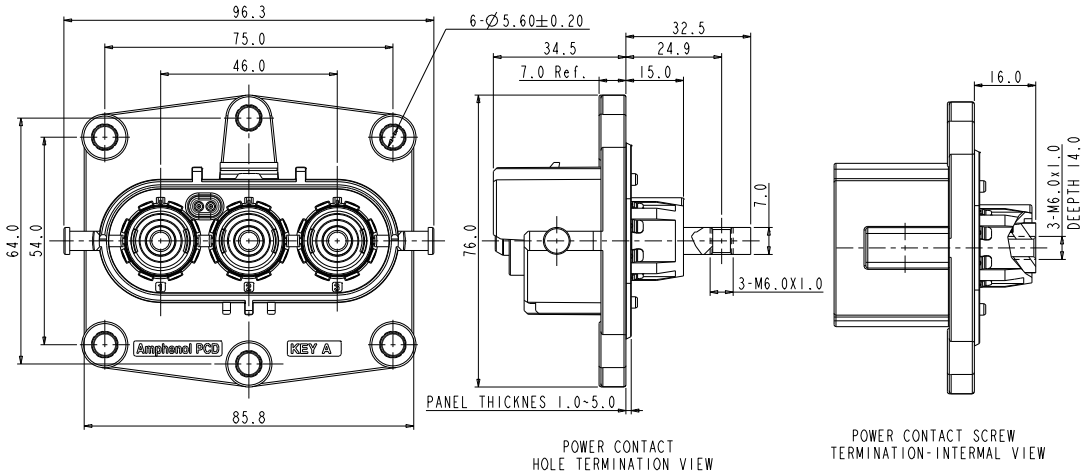

INSERT ORIENTATIONS

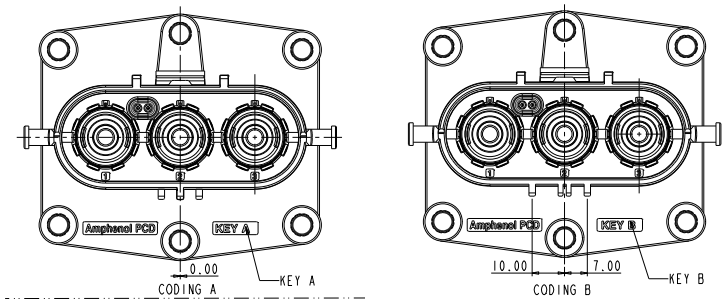

	Coding A	Coding B
P/N	HVSL800 02 3 A	HVSL800 02 3 B

3 PIN STRAIGHT PLUG

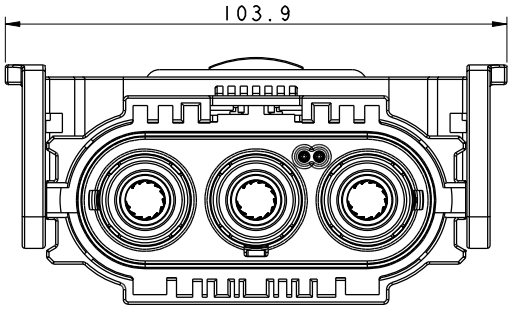

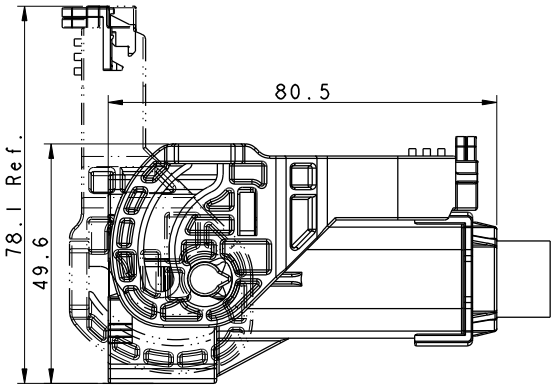

INSERT ORIENTATIONS

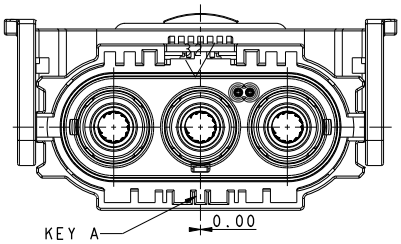

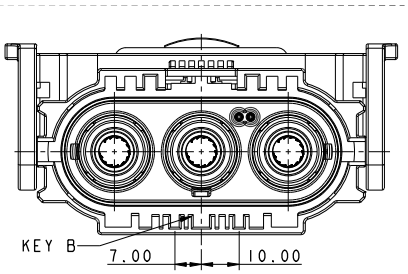

	Coding A	Coding B
P/N	HVSL800 06 3 A	HVSL800 06 3 B

3 PIN RIGHT ANGLE PLUG

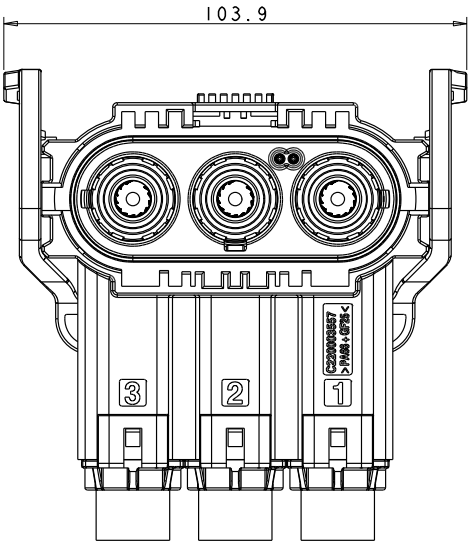

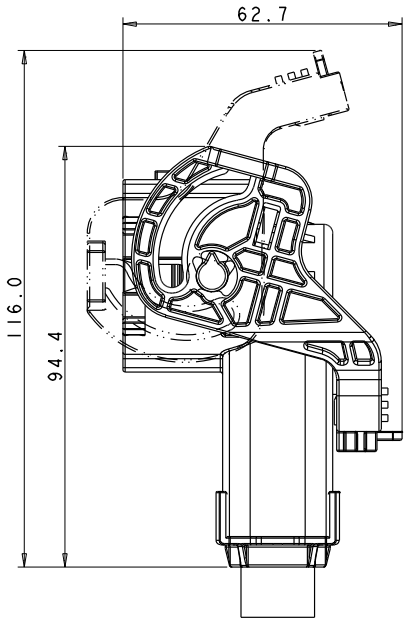

INSERT ORIENTATIONS

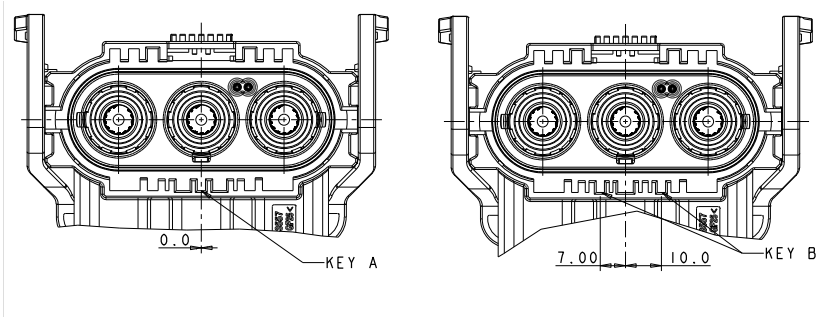

	A	B
P/N	HVSL800 08 3 A	HVSL800 08 3 B

INSTALLATION CLEARANCE

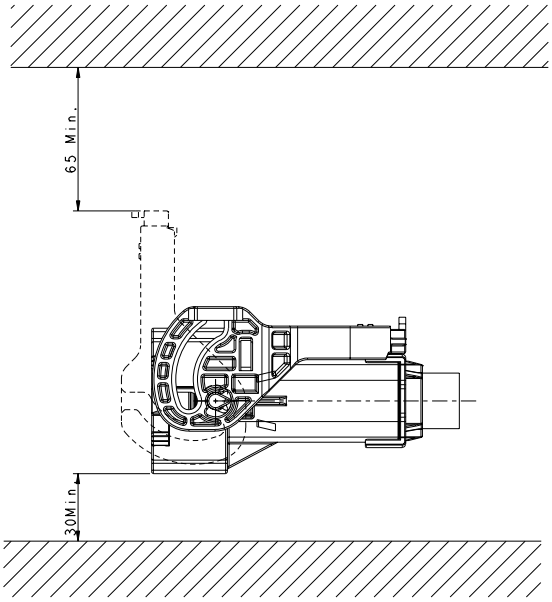

EXTRACTION TOOL FOR RECEPTACLE

HVIL-contact Extraction tool: HVTOOL10R

HOW TO ORDER: PLUG

HVSL800	06	2	A	0	50

Product type:
06: Straight plug | **08:** Right angle plug

Position:
2: 2 position | **3:** 3 position

Coding / Alternate position:
A: Coding A | **B:** Coding B | **C:** Coding C (Only for 2 position)

Interlock:
0: Without interlock | **1:** With interlock

Cable size:
25: 25mm^2 cable | **35:** 35mm^2 cable | **50:** 50mm^2 cable

HOW TO ORDER: RECEPTACLE

HVSL800	02	2	A	0	H6

Product type:
02: Box mounted receptacle

Position:
2: 2 position | **3:** 3 position

Coding / Alternate position:
A: Coding A | **B:** Coding B | **C:** Coding C (Only for 2 positions)

Interlock:
0: Without interlock | **1:** With interlock

Cable size:
H6: Copper bar, OT terminal | **D6:** Screw (Internal), OT terminal

CHARTS (HVSL 800)

HVSL 800 | Temperature Rise

HVSL 800 | Derating Curve

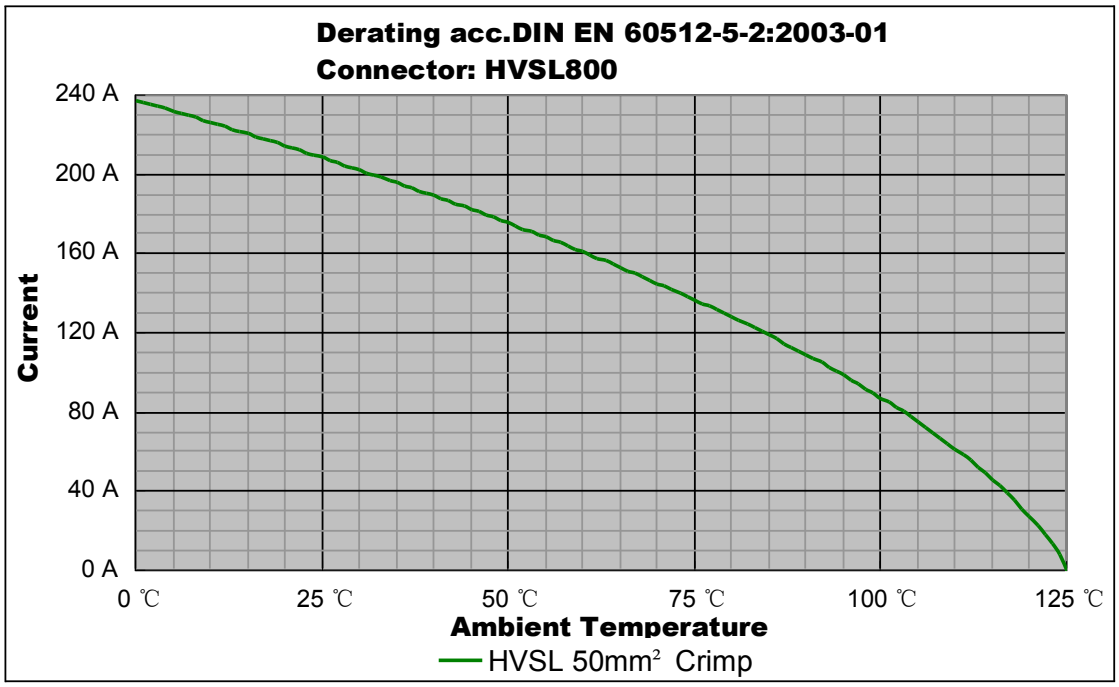

Remark: tests carried out on the complete connector.

Excel|Mate Metal: 2 PIN & 3 PIN CONNECTOR

Excel|Mate Metal

Excel|Mate Metal is a 2 pin and 3 pin connector with current carrying capacity from 80 to 120A and 16 to 25mm^2 crimping cable.

Specially designed for battery, inverters, junction boxes, power distribution boxes and others xEV devices' equipment.

KEY FEATURES

- Integrated internal HVIL
- Current rating up to 120A
- No tool required to unmate
- Sealing, IP67 (mated), IP6K9K
- Touch-proof, IP2XB
- Multiple coding positions
- CPA available

MECHANICAL	
Durability	≥ 50 mating cycles
Wire range	16 to 25 mm^2 shielded wire
Insertion and extraction force	< 100N
Connection type	Copper bar
HVIL	Integrated
CPA	Available
ELECTRICAL	
Rated voltage	1000V DC
Rated current	120A Max @ ambient temperature 70°C
Insulator resistance	> 200MΩ
Dielectric withstand voltage	3000V AC
Shielding	360° from wire to device
ENVIRONMENTAL	
Sealing	IP67, IP6K9K (mated)
Touch-proof	IP2XB
Temperature range	-40°C to 125°C
Salt spray	96 hours
MATERIAL	
Terminals	Copper/copper alloy with silver plating
Housing	Zinc alloy

2 PIN RECEPTACLE

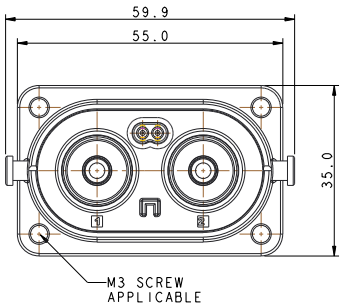

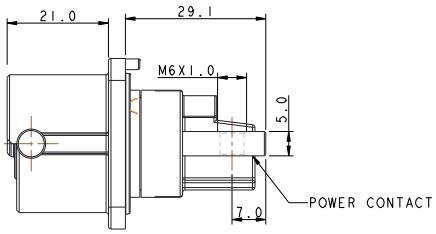

INSERT ORIENTATIONS

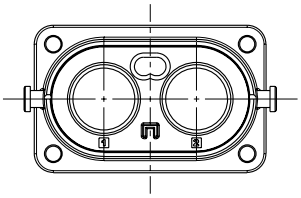

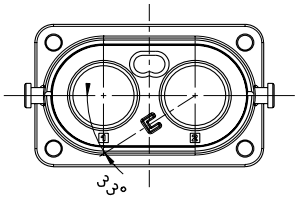

	Coding A	Coding B
P/N	HVSLS600 02 2 A	HVSLS600 02 2 B

PANEL MOUNTING DIMENSIONS

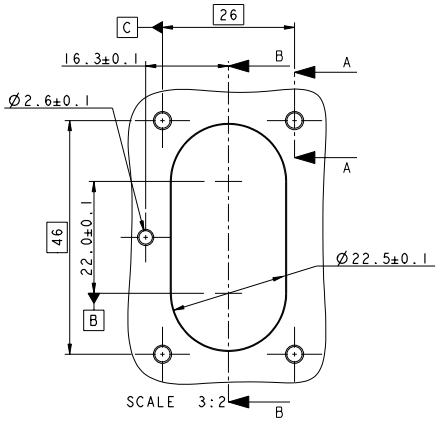

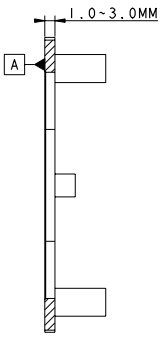

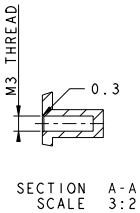

INSERT ORIENTATIONS

Coding A

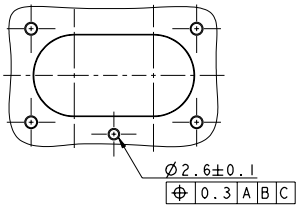

Coding B

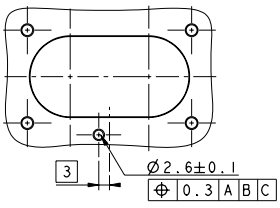

2 PIN STRAIGHT PLUG

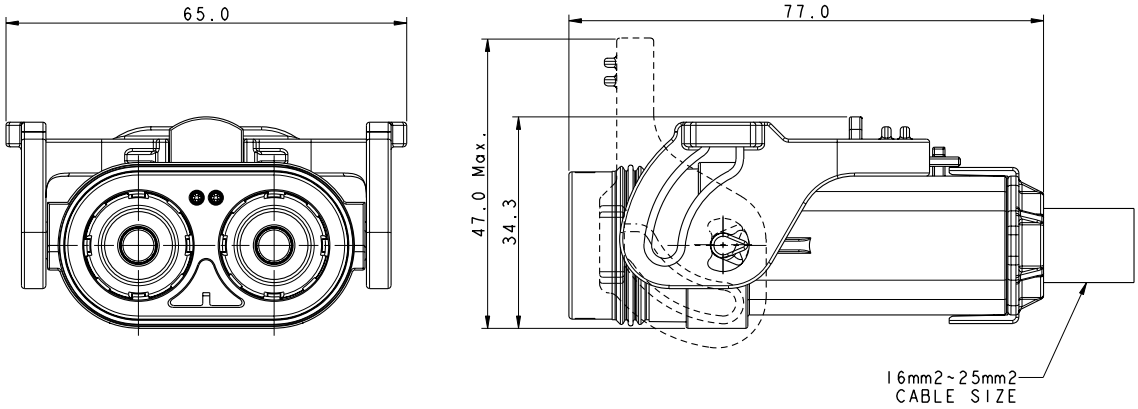

INSERT ORIENTATIONS

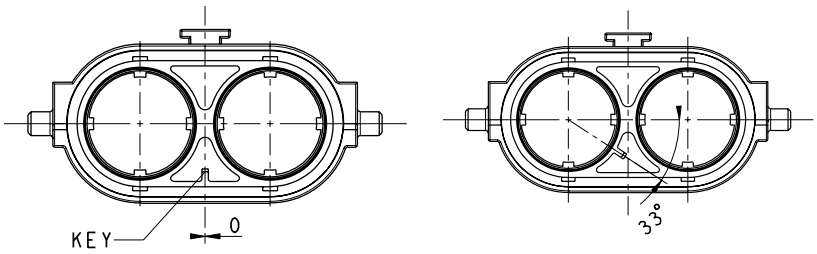

	Coding A	Coding B
P/N	HVSLS600 06 2 A	HVSLS600 06 2 B

2 PIN RIGHT ANGLE PLUG

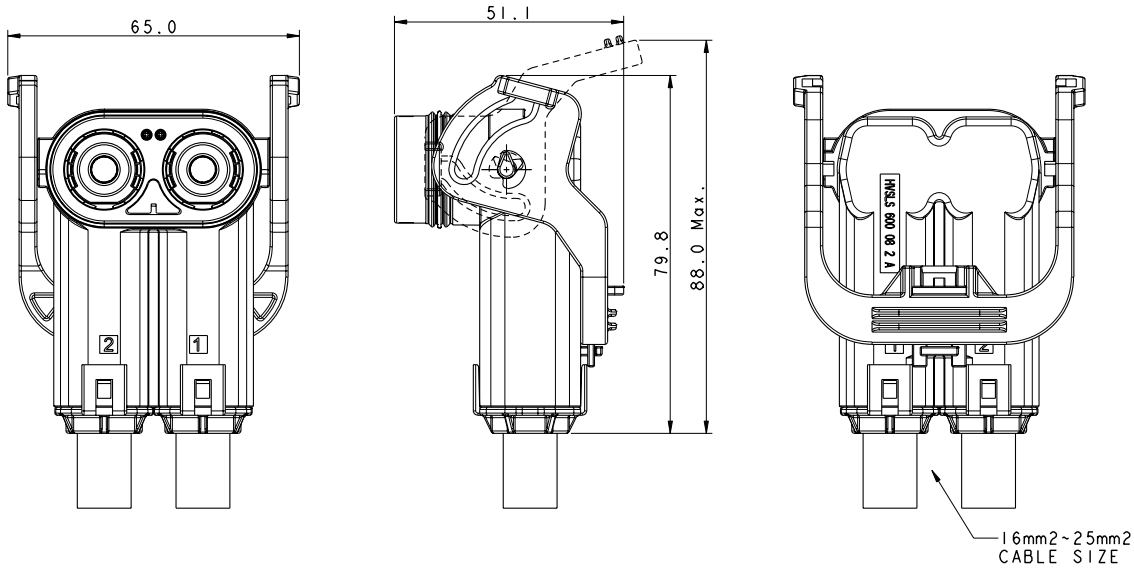

INSERT ORIENTATIONS

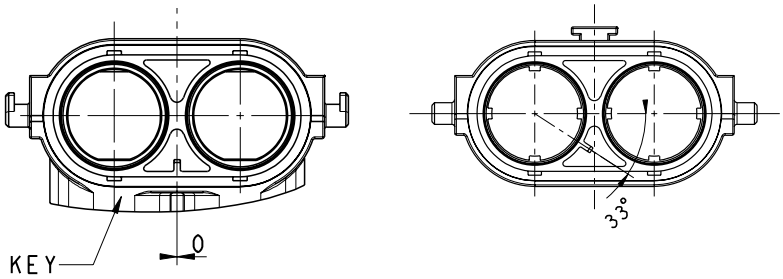

	Coding A	Coding B
P/N	HVSLS600 08 2 A	HVSLS600 08 2 B

3 PIN RECEPTACLE

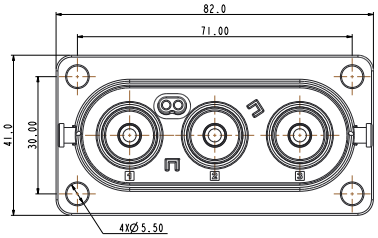

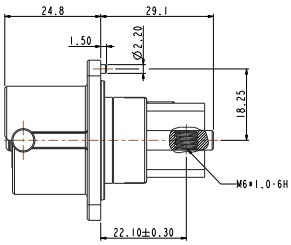

INSERT ORIENTATIONS

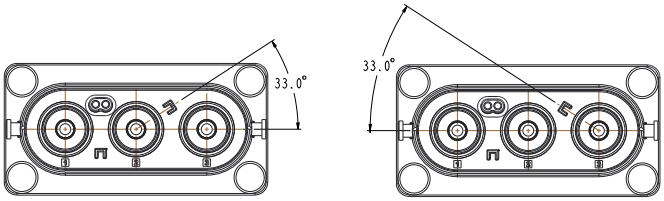

	Coding A	Coding B
P/N	HVSLS600 02 3 A	HVSLS600 02 3 B

PANEL MOUNTING DIMENSIONS

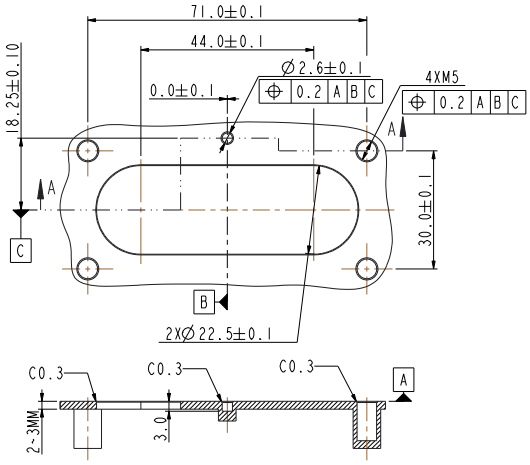

INSERT ORIENTATIONS

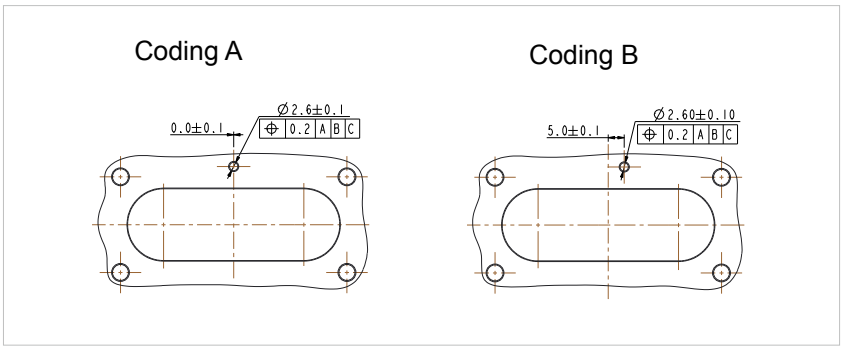

Excel|Mate Metal (HVSLS 600)

3 PIN STRAIGHT PLUG

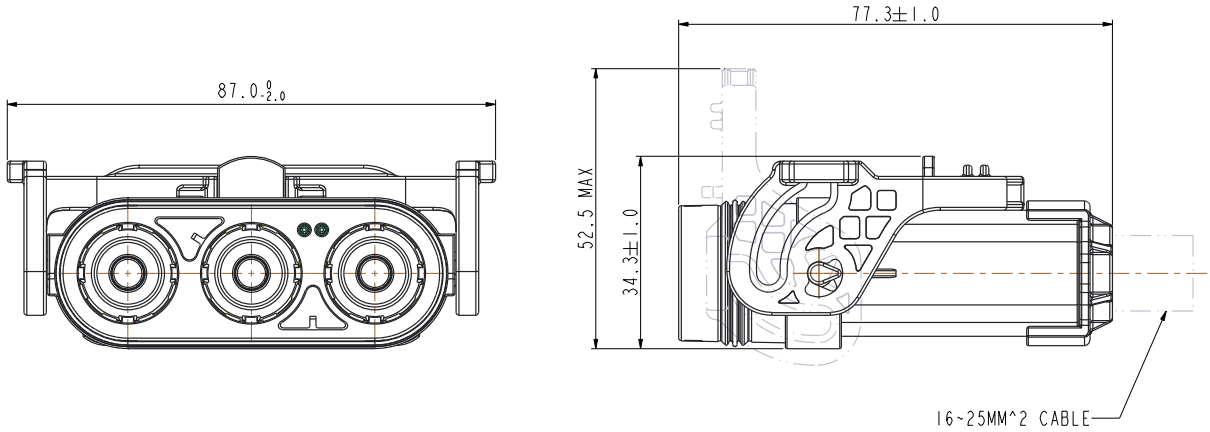

INSERT ORIENTATIONS

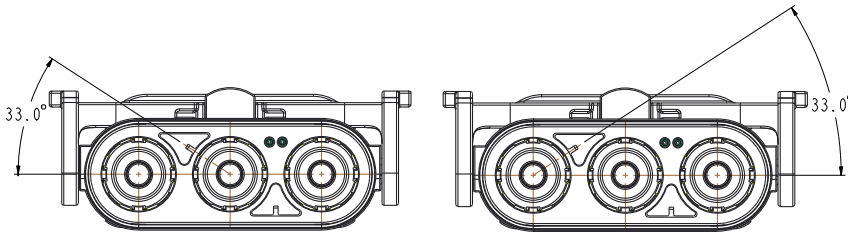

	Coding A	Coding B
P/N	HVSLS600 06 3 A	HVSLS600 06 3 B

3 PIN RIGHT ANGLE PLUG

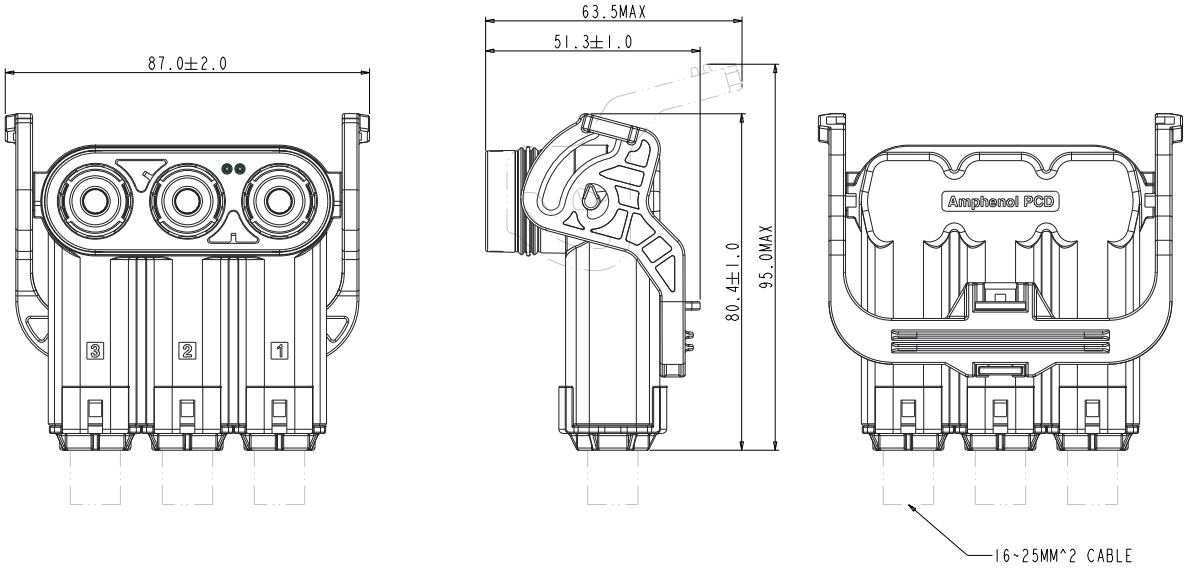

INSERT ORIENTATIONS

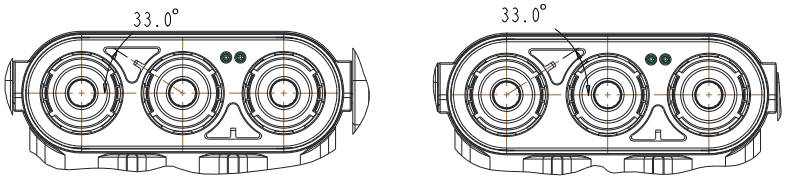

	Coding A	Coding B
P/N	HVSLS600 08 2 A	HVSLS600 08 2 B

INSTALLATION CLEARANCE

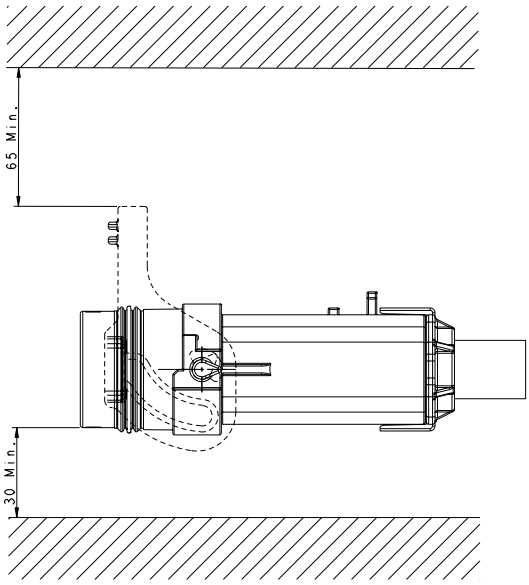

TOOL FOR RIGHT ANGLE PLUGS

Tool for locking contacts: HVSLP033002

Remark:
Customer needs to use fixture HVSLP033002 with Stanley torque wrench sleeve (purchased by the customer) for assembling the finish product HVSLS600082.

HOW TO ORDER: PLUG

HVSLS600	06	2	A	0	16

Product type:
06: Straight plug | **08:** Right angle plug

Position:
2: 2 position | **3:** 3 position

Coding / Alternate position:
A: Coding A | **B:** Coding B

Interlock:
0: Without interlock | **1:** With interlock

Cable size:
16: 16mm^2 cable | **25:** 25mm^2 cable

HOW TO ORDER: RECEPTACLE

HVSLS600	02	2	A	0	H6

Product type:
02: Box mounted receptacle

Position:
2: 2 position | **3:** 3 position

Coding / Alternate position:
A: Coding A | **B:** Coding B

Interlock:
0: Without interlock | **1:** With interlock

Cable size:
H6: OT terminal

HVSLS 600 | Temperature Rise

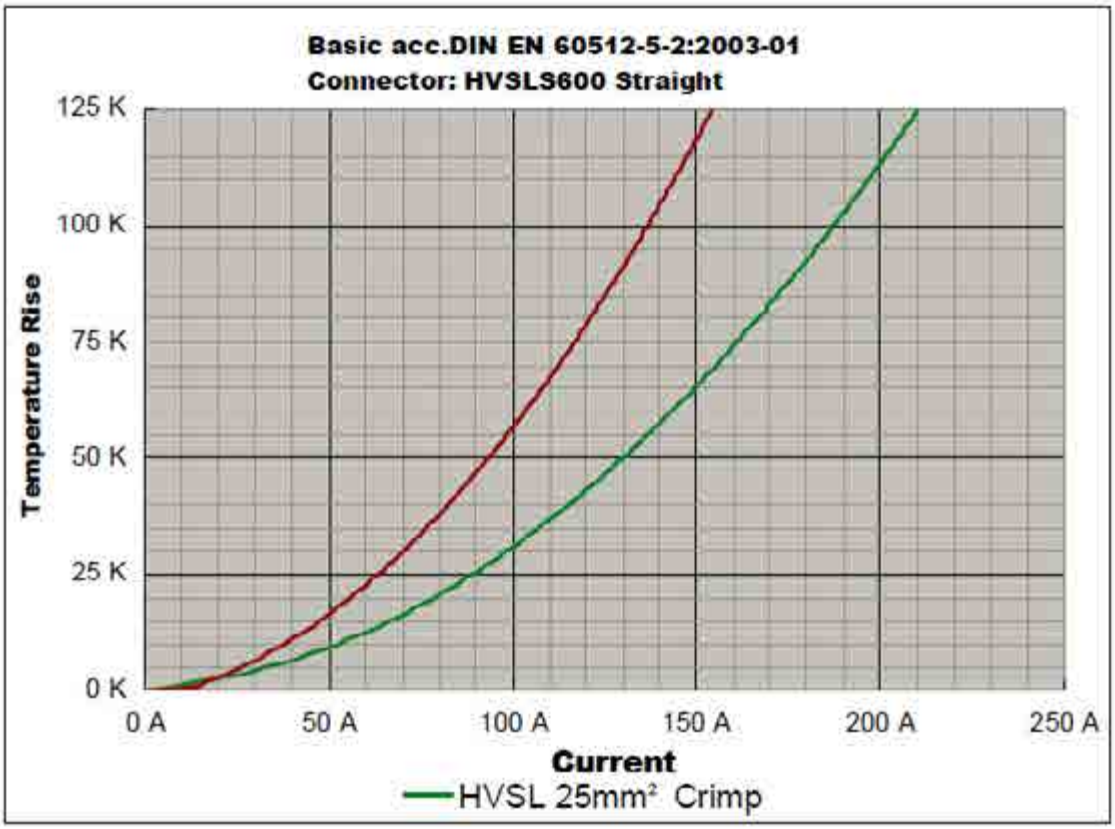

HVSLS 600 | Derating Curve

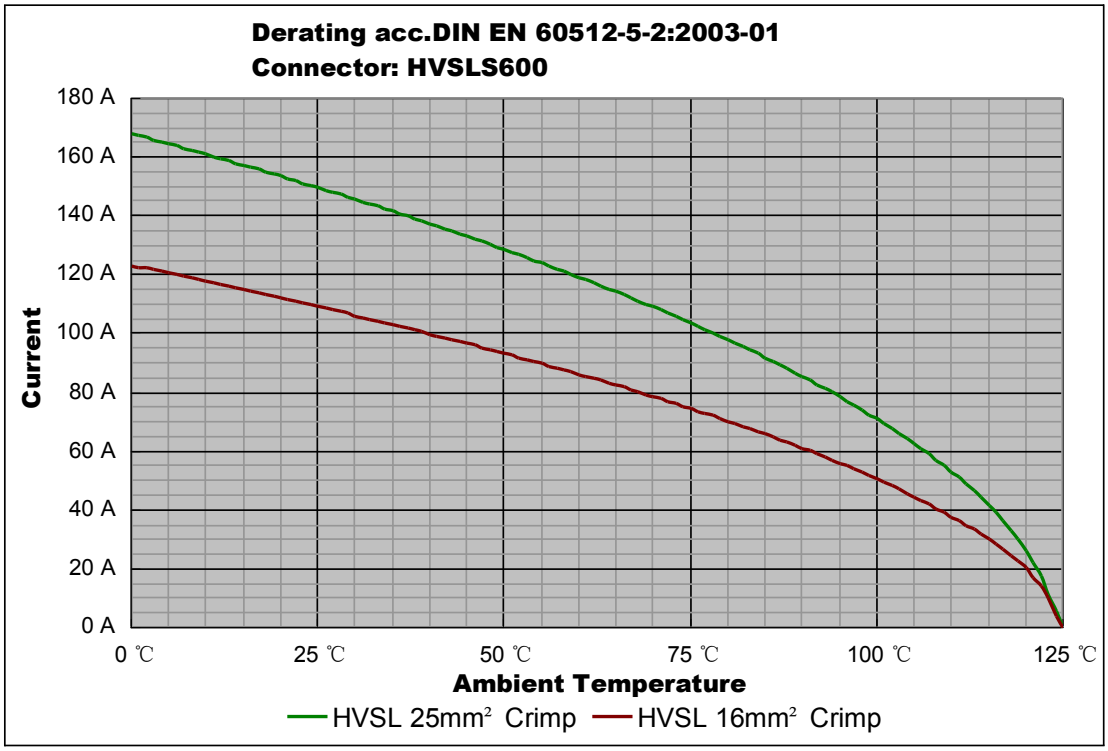

Remark: tests carried out on the complete connector.

Excel|Mate Metal (HVSLS 800)

Excel|Mate Metal (HVSLS800)

Excel|Mate Metal

Excel|Mate Metal is a 2 pin connector with a current carrying capacity of 180A and 35 to 50mm^2 crimping cable.

Specially designed for battery, inverters, junction boxes, power distribution boxes and others xEV devices' equipment.

KEY FEATURES

- Integrated internal HVIL
- Current rating up to 180A
- No tool required to unmate
- Sealing, IP67 (mated), IP6K9K
- Touch-proof, IP2XB
- Multiple coding positions
- CPA available

MECHANICAL	
Durability	≥ 50 mating cycles
Wire range	35 to 50 mm^2 shielded wire
Insertion and extraction force	< 100N
Connection type	Copper bar
HVIL	Integrated
CPA	Available
ELECTRICAL	
Rated voltage	1000V DC
Rated current	180A Max @ ambient temperature 70°C
Insulator resistance	> 200MΩ
Dielectric withstand voltage	3000V AC
Shielding	360° from wire to device
ENVIRONMENTAL	
Sealing	IP67, IP6K9K (mated)
Touch-proof	IP2XB
Temperature range	-40°C to 125°C
Salt spray	96 hours
MATERIAL	
Terminals	Copper/copper alloy with silver plating
Housing	Zinc alloy

RECEPTACLE

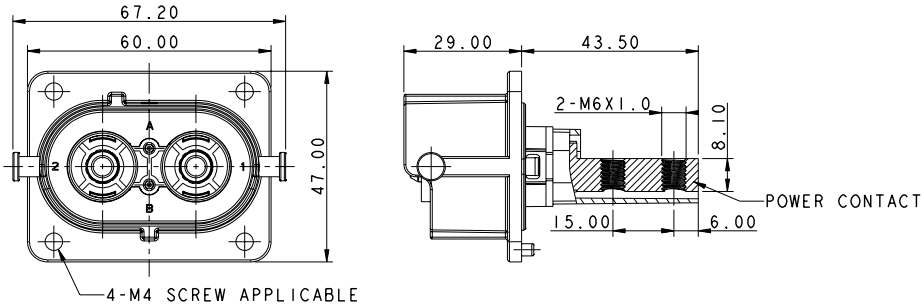

INSERT ORIENTATIONS

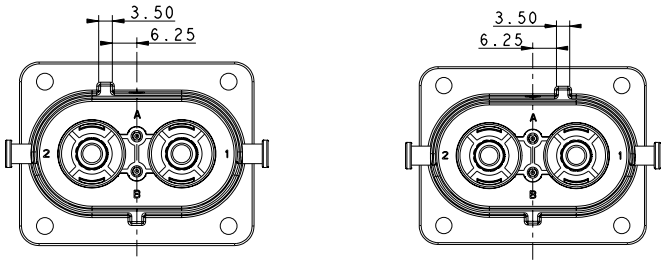

	Coding A	Coding B
P/N	HVSLS800 02 2 A	HVSLS800 02 2 B

PANEL MOUNTED DIMENSIONS

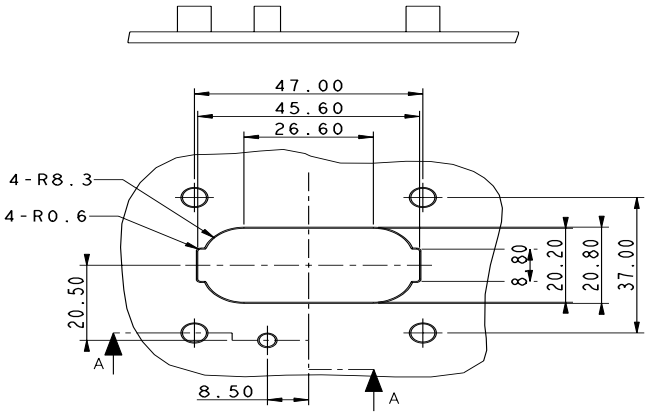

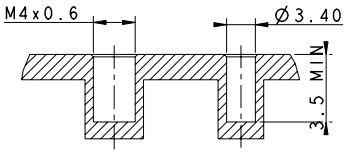

SECTION A-A
SCALE 2:1

Excel|Mate Metal (HVSLS 800)

STRAIGHT PLUG

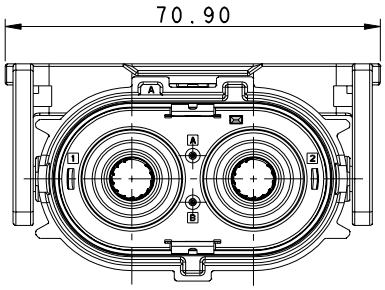

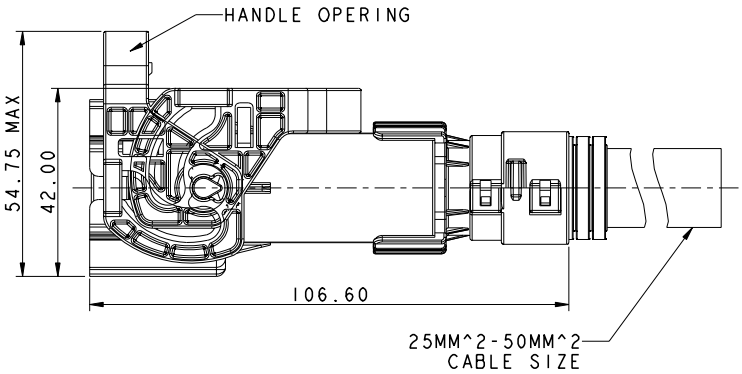

INSERT ORIENTATIONS

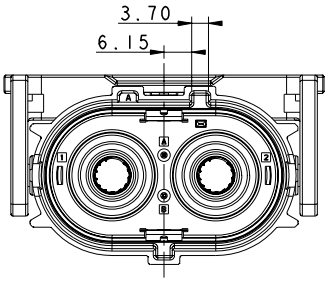

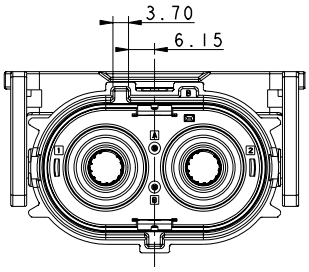

	Coding A	Coding B
P/N	HVSLS800 06 2 A	HVSLS800 06 2 B

RIGHT ANGLE PLUG

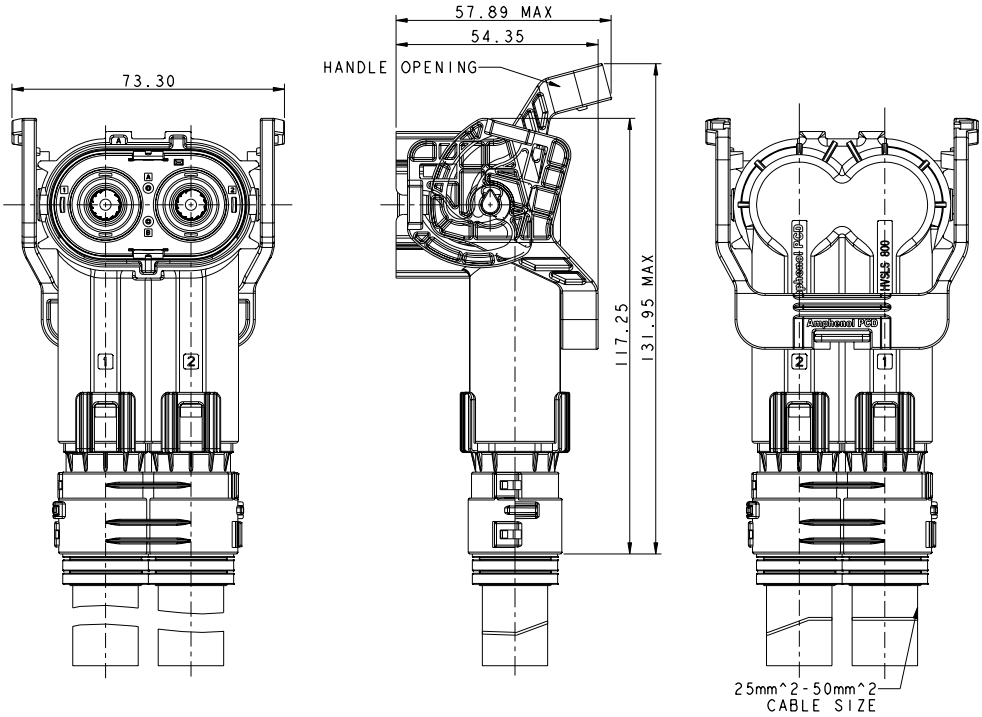

INSERT ORIENTATIONS

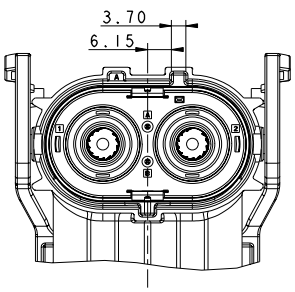

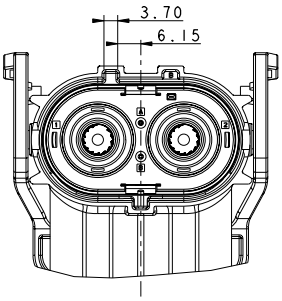

	Coding A	Coding B
P/N	HVSLS800 08 2 A	HVSLS800 08 2 B

INSTALLATION CLEARANCE

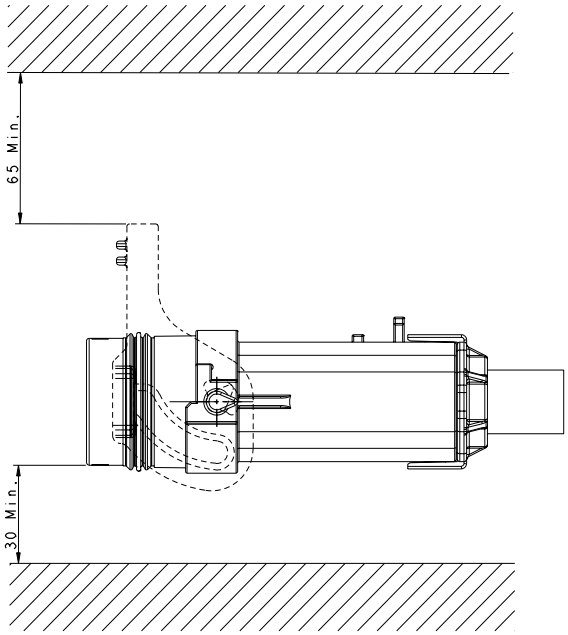

HOW TO ORDER: PLUG

HVSLS800	06	2	A	0	35

Product type:
06: Straight plug | **08:** Right angle plug

Position:
2: 2 position

Coding / Alternate position:
A: Coding A | **B:** Coding B

Interlock:
0: Without interlock | **1:** With interlock

Cable size:
35: 35mm^2 cable | **50:** 50mm^2 cable

HOW TO ORDER: RECEPTACLE

HVSLS800	02	2	A	0	H6

Product type:
02: Box mounted receptacle

Position:
2: 2 position

Coding / Alternate position:
A: Coding A | **B:** Coding B

Interlock:
0: Without interlock | **1:** With interlock

Cable size:
H6: OT terminal

Excel|Mate Eco (HVSL600 1 POSITION CONNECTOR)

HVSL600

HVSL600 is a single pin connector with a current carrying capacity of 120A and 25mm^2 crimping cable. It can be utilized with multi-core or individually shielded wire. An integrated internal HVIL with multiple routing options allows package size optimization and flexibility.

KEY FEATURES

- Integrated internal HVIL
- Current rating up to 120A
- Two-stage, tool or thumb activated latching
- No tool required to unmate
- Sealing, IP67 (mated), IP6K9K
- Touch-proof, IP2XB
- Multiple coding positions
- CPA available

MECHANICAL	
Durability	≥ 50 mating cycles
Wire range	25mm^2 shielded wire
Insertion and extraction force	< 100N
Connection type	Crimping or bus-bar
Latching style	Two stage, finger actuated
HVIL	Integrated
CPA	Available
ELECTRICAL	
Rated voltage	800V DC
Rated current	120A @ ambient temperature 70°C
Insulator resistance	> 200MΩ
Dielectric withstand voltage	3000V AC
Shielding	360° from wire to device
ENVIRONMENTAL	
Sealing	IP67, IP6K9K (mated)
Touch-proof	IP2XB
Temperature range	-40°C to 125°C
MATERIAL	
Terminals	Copper/copper alloy with silver plating
Housing	PA66 + GF

RECEPTACLE

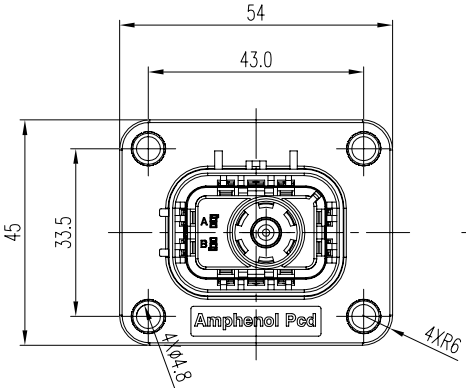

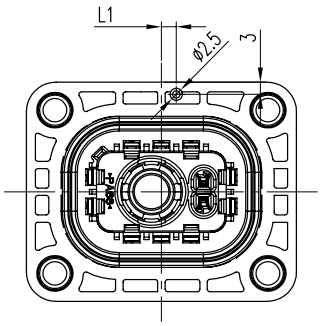

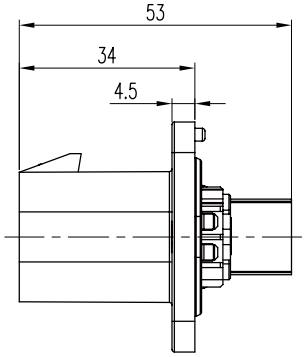

CONTACTS

All connectors do not include contacts. Please order them separately (ref: P/N below)		
For HVSL600021XX25	For HVSL600021XXH6	For HVSL600021XX25
Pin contact: crimp for wire	Pin contact: end with bus-bar	Pin signal contact (HVIL)
P/N: C420003621	P/N: C420003625	P/N: C310003613
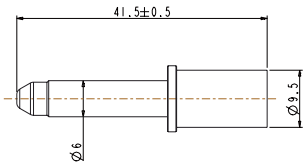	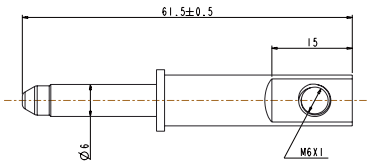	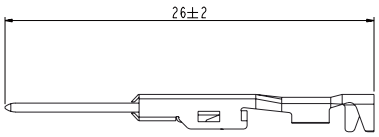
25mm^2 unshielded wire	—	0.5mm^2 unshielded wire

PANEL MOUNTING DIMENSIONS

CODING	A	B	C	D	E
L1 (Receptacle)	0	3	6	-3	-6
L1 (Panel mount)	0	-3	-6	3	6

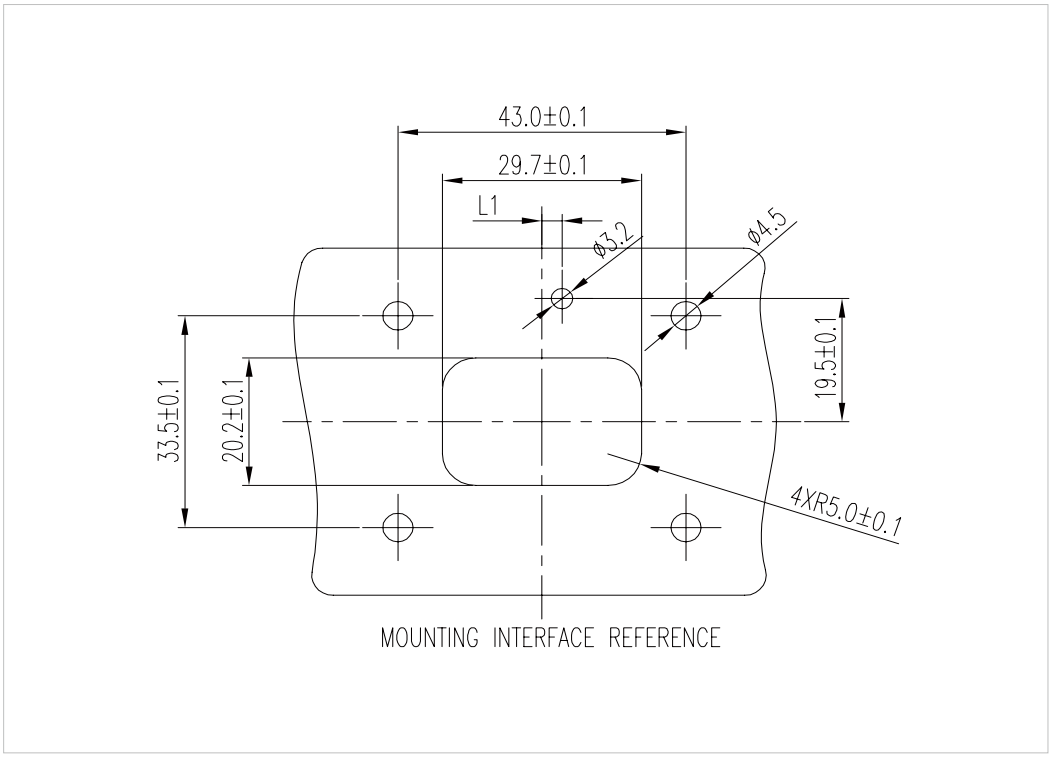

INSERT ORIENTATIONS

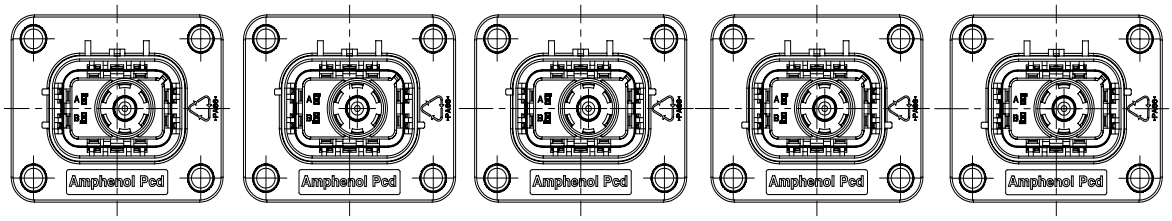

	Coding A	Coding B	Coding C	Coding D	Coding E
P/N	HVSL600 02 1 A	HVSL600 02 1 B	HVSL600 02 1 C	HVSL600 02 1 D	HVSL600 02 1 E

PLUG

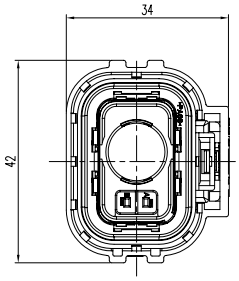

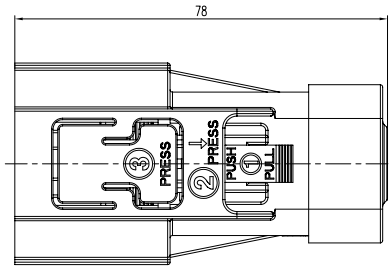

CONTACTS

All connectors do not include contacts. Please order them separately (ref: P/N below)	
For HVSL600061XX25XX	For HVSL600061XX25XX
Socket contact	Socket signal contact (HVIL)
P/N: C420003620	P/N: C310003614
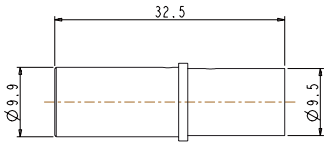	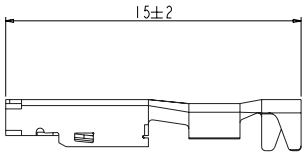
25mm^2 shielded wire	0.5mm^2 unshielded wire

Sealing gasket for HVSL600061XX25XX:

12	11	10
P/N: C270003607	P/N: C2700036071	P/N: C2700036072
12 ± 0.2 mm (Wire OD)	11 ± 0.2 mm (Wire OD)	10 ± 0.2 mm (Wire OD)

INSERT ORIENTATIONS

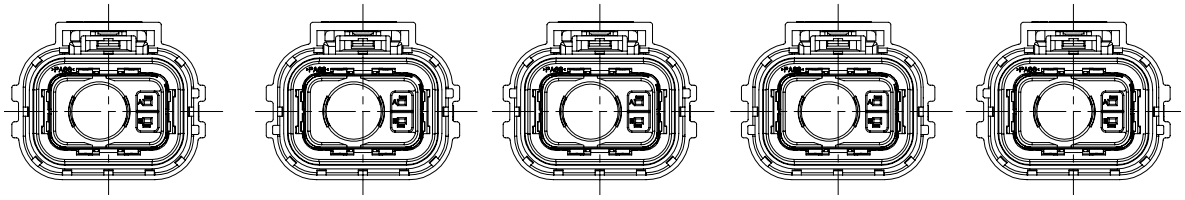

	Coding A	Coding B	Coding C	Coding D	Coding E
P/N	HVSL600 06 1 A	HVSL600 06 1 B	HVSL600 06 1 C	HVSL600 06 1 D	HVSL600 06 1 E

HOW TO ORDER: PLUG

		HVSL600	06	1	A	0	25	10
Product type:	**06:** Straight plug							
Position:	**1:** 1 position							
Coding / Alternate position:	**A:** Coding A **B:** Coding B **C:** Coding C **D:** Coding D **E:** Coding E							
Interlock:	**0:** Without interlock **1:** With interlock							
Cable size:	**25:** 25mm^2							
Sealing gasket:	**10:** 10mm (Wire OD) **11:** 11mm (Wire OD) **12:** 12mm (Wire OD)							

HOW TO ORDER: RECEPTACLE

		HVSL600	02	1	A	25
Product type:	**02:** Box mounted receptacle					
Position:	**1:** 1 position					
Coding / Alternate position:	**A:** Coding A **B:** Coding B **C:** Coding C **D:** Coding D **E:** Coding E					
Cable size:	**25:** 25mm^2 **H6:** OT terminal					

CHARTS (HVSL 600)

HVSL 600 | Temperature Rise

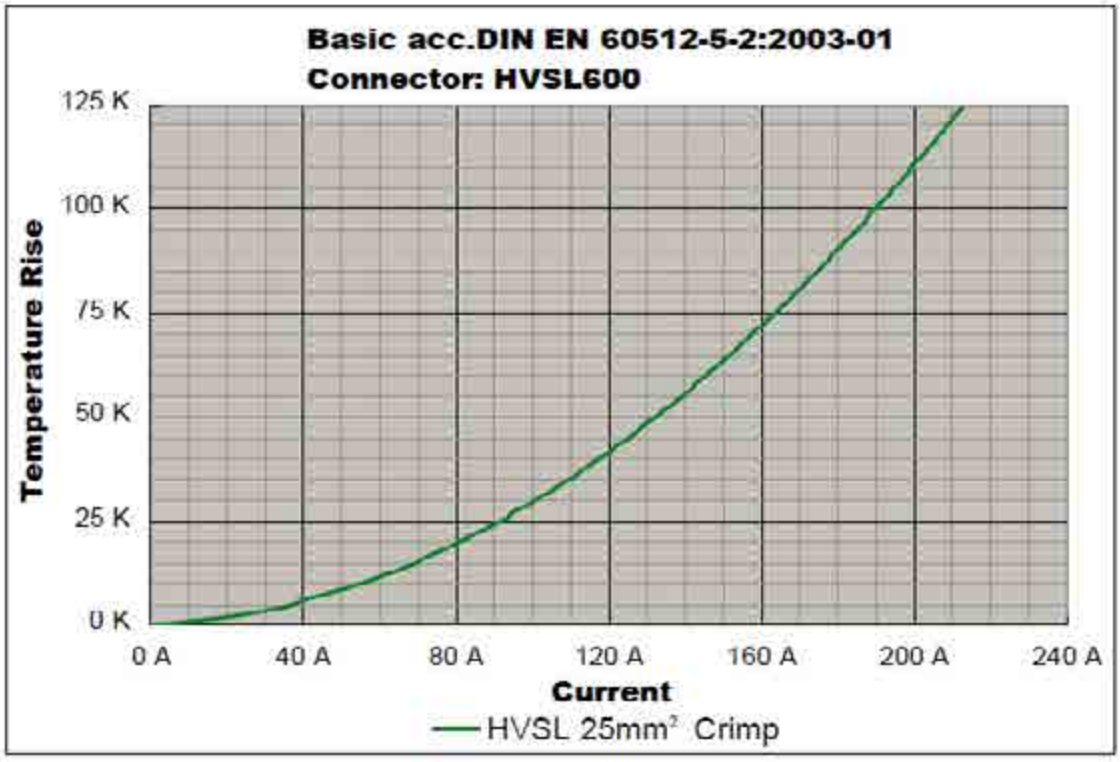

HVSL 600 | Derating Curve

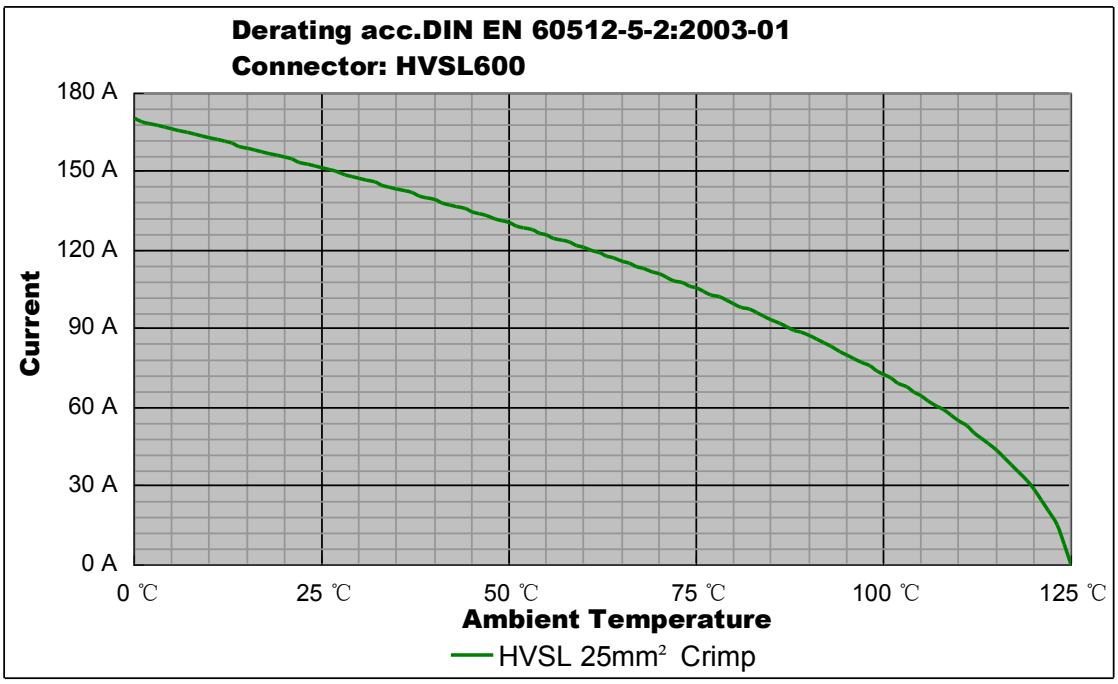

Remark: tests carried out on the complete connector.

Excel|Mate Eco (HVSL630 2 POSITION CONNECTOR)

HVSL630

HVSL630 is a 2 position connector with a current carrying capacity from 23 to 40A and 4 to 6mm^2 crimping cable.

Specially designed for DC-DC, air-conditioner, and others xEV devices' equipment.

KEY FEATURES

- Integrated internal HVIL
- Current rating up to 40A
- Two-stage, tool or thumb activated latching
- No tool required to unmate
- Sealing, IP67 (mated), IP6K9K
- Touch-proof, IP2XB
- Multiple coding positions
- CPA available

MECHANICAL	
Durability	≥ 50 mating cycles
Wire range	4 to 6 mm^2 shielded wire
Insertion and extraction force	< 100N
Connection type	Crimping
Latching style	Two stage, finger actuated
HVIL	Integrated
CPA	Available
ELECTRICAL	
Rated voltage	800V DC
Rated current	40A Max @ ambient temperature 70°C
Insulator resistance	> 200MΩ
Dielectric withstand voltage	3000V AC
Shielding	360° from wire to device
ENVIRONMENTAL	
Sealing	IP67, IP6K9K (mated)
Touch-proof	IP2XB
Temperature range	-40°C to 125°C
MATERIAL	
Terminals	Copper/copper alloy with tin plating
Housing	PA66 + GF

RECEPTACLE

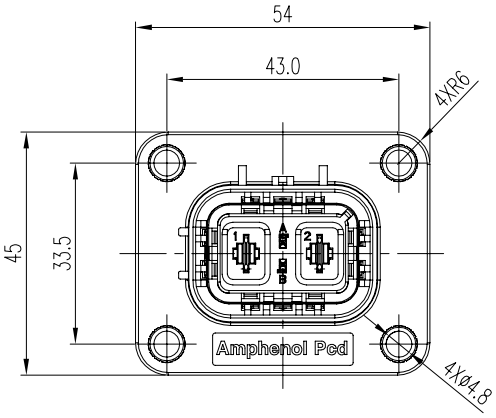

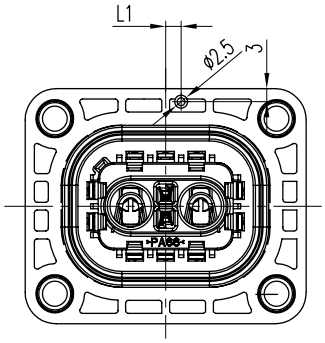

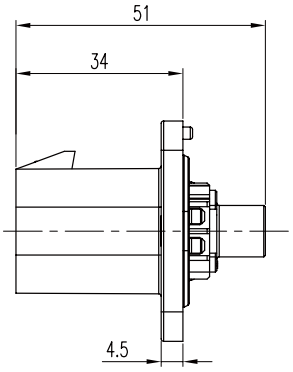

CONTACTS

All connectors do not include contacts. Please order them separately (ref: P/N below)	
For HVSL630022XX06	For HVSL630022XX06
Pin contact: crimping	Pin signal contact (HVIL)
P/N: C310003622	P/N: C310003613
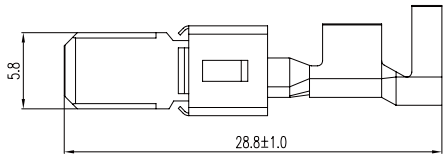	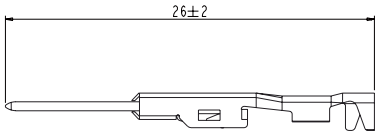
4 to 6mm^2 unshielded wire	0.5mm^2 unshielded wire

PANEL MOUNTING DIMENSIONS

CODING	A	B	C	D	E
L1 (Receptacle)	0	3	6	-3	-6
L1 (Panel mount)	0	-3	-6	3	6

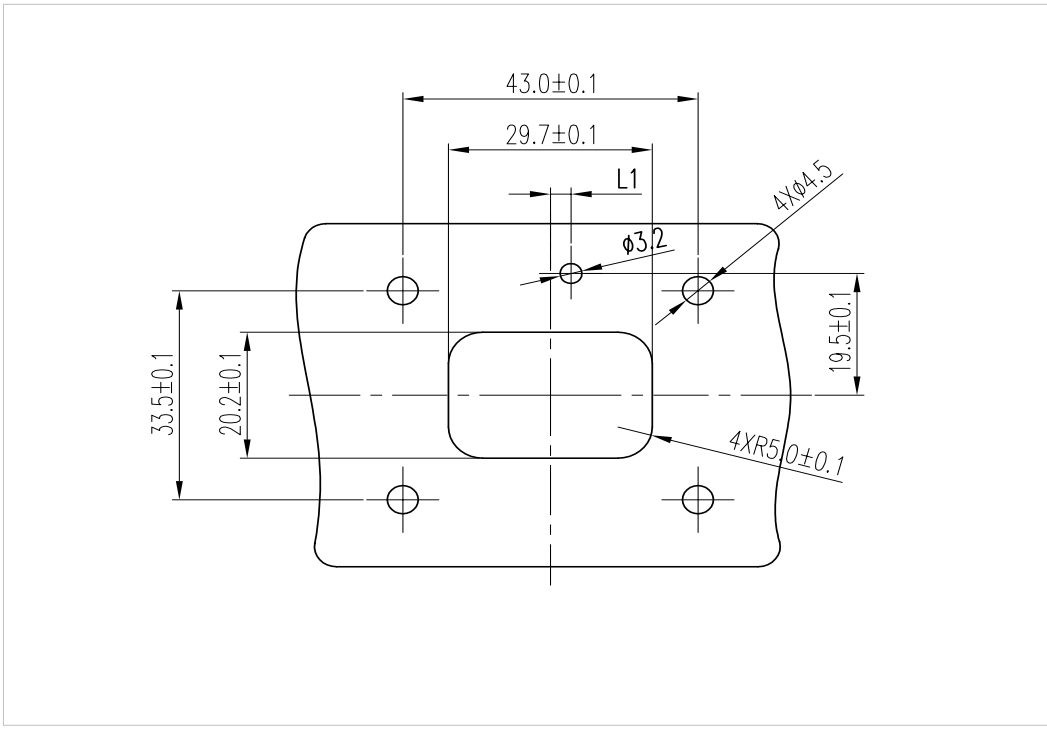

INSERT ORIENTATIONS

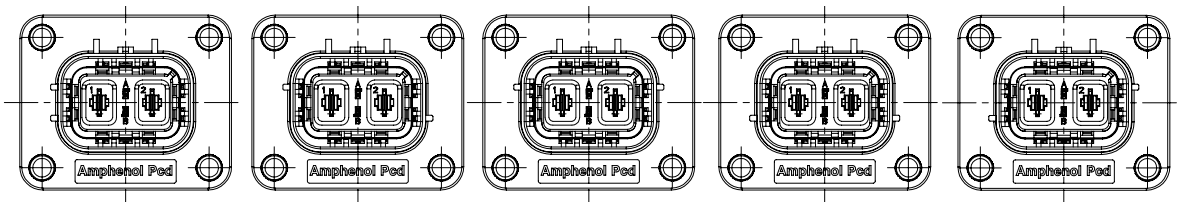

	Coding A	Coding B	Coding C	Coding D	Coding E
P/N	HVSL630 02 2 A	HVSL630 02 2 B	HVSL630 02 2 C	HVSL630 02 2 D	HVSL630 02 2 E

PLUG

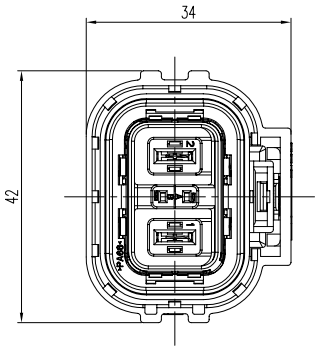

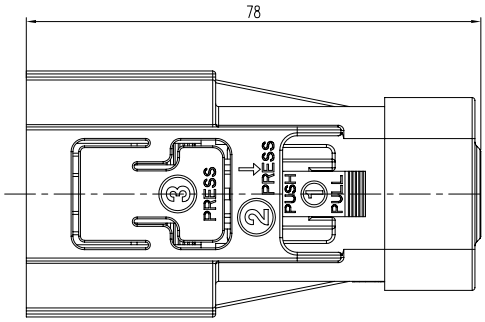

CONTACTS

All connectors do not include contacts. Please order them separately (ref: P/N below)	
For HVSL630062XX06XX	For HVSL630062XX06XX
Socket contact	Socket signal contact (HVIL)
P/N: C310003623	P/N: C310003614
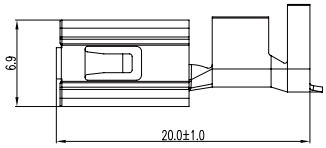	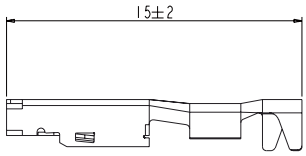
4 to 6mm^2 shielded wire	0.5mm^2 unshielded wire

Sealing gasket for HVSL630062XX06XX:

12	11	10
P/N: C270003607	P/N: C2700036071	P/N: C2700036072
12 ± 0.2 mm (Wire OD)	11 ± 0.2 mm (Wire OD)	10 ± 0.2 mm (Wire OD)

INSERT ORIENTATIONS

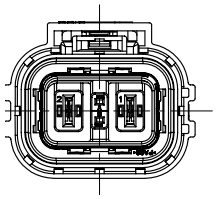
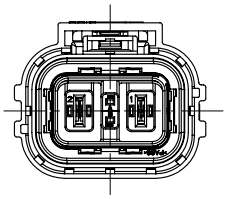
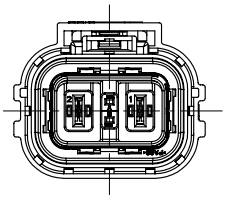
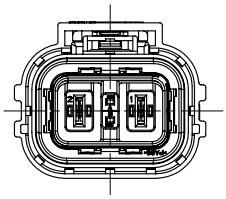
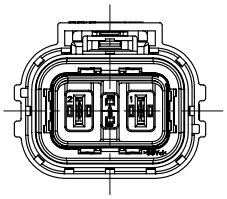

	Coding A	Coding B	Coding C	Coding D	Coding E
P/N	HVSL630 06 2 A	HVSL630 06 2 B	HVSL630 06 2 C	HVSL630 06 2 D	HVSL630 06 2 E

HOW TO ORDER: PLUG

		HVSL630	06	2	A	0	04	10
Product type:	**06:** Straight plug							
Position:	**2:** 2 positions							
Coding / Alternate position:	**A:** Coding A **B:** Coding B **C:** Coding C **D:** Coding D **E:** Coding E							
Interlock:	**0:** Without interlock **1:** With interlock							
Cable size:	**04:** 4mm^2 **06:** 6mm^2 **25:** 25mm^2							
Sealing gasket:	**10:** 10mm (Wire OD) **11:** 11mm (Wire OD) **12:** 12mm (Wire OD)							

HOW TO ORDER: RECEPTACLE

		HVSL630	02	2	A	04
Product type:	**02:** Box mounted receptacle					
Position:	**2:** 2 positions					
Coding / Alternate position:	**A:** Coding A **B:** Coding B **C:** Coding C **D:** Coding D **E:** Coding E					
Cable size:	**04:** 4mm^2 **06:** 6mm^2					

CHARTS (HVSL 630)

HVSL 630 | Temperature Rise

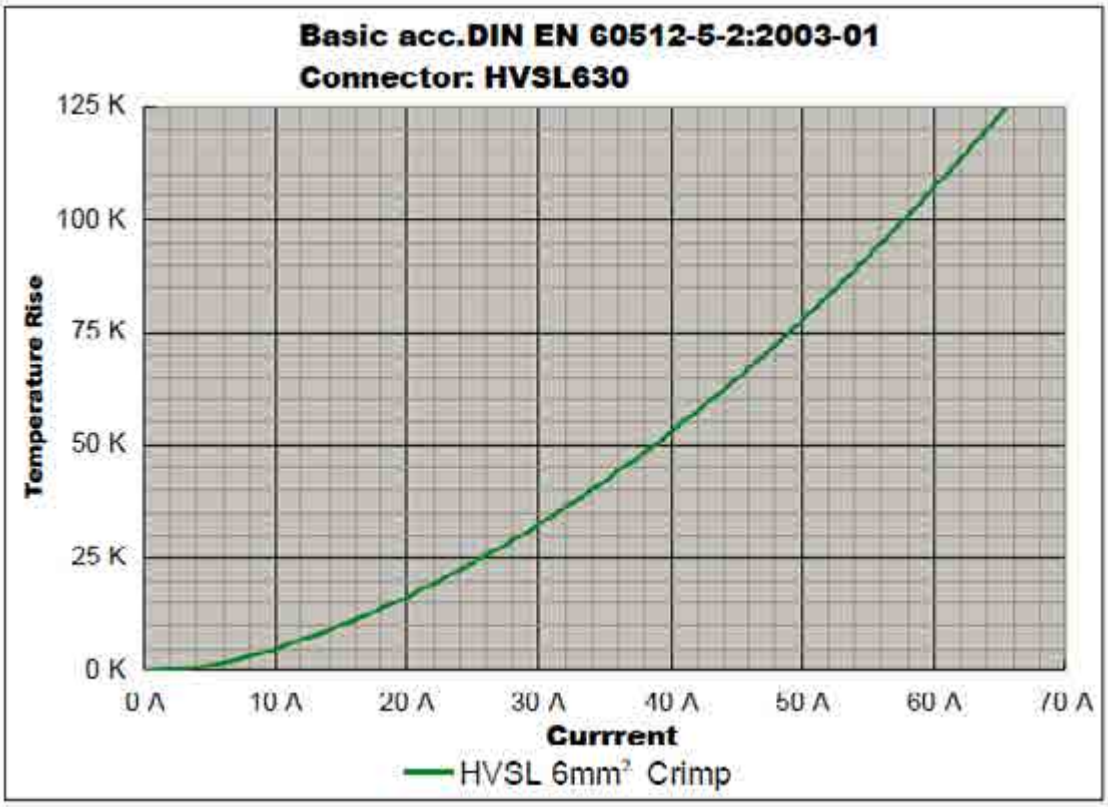

HVSL 630 | Derating Curve

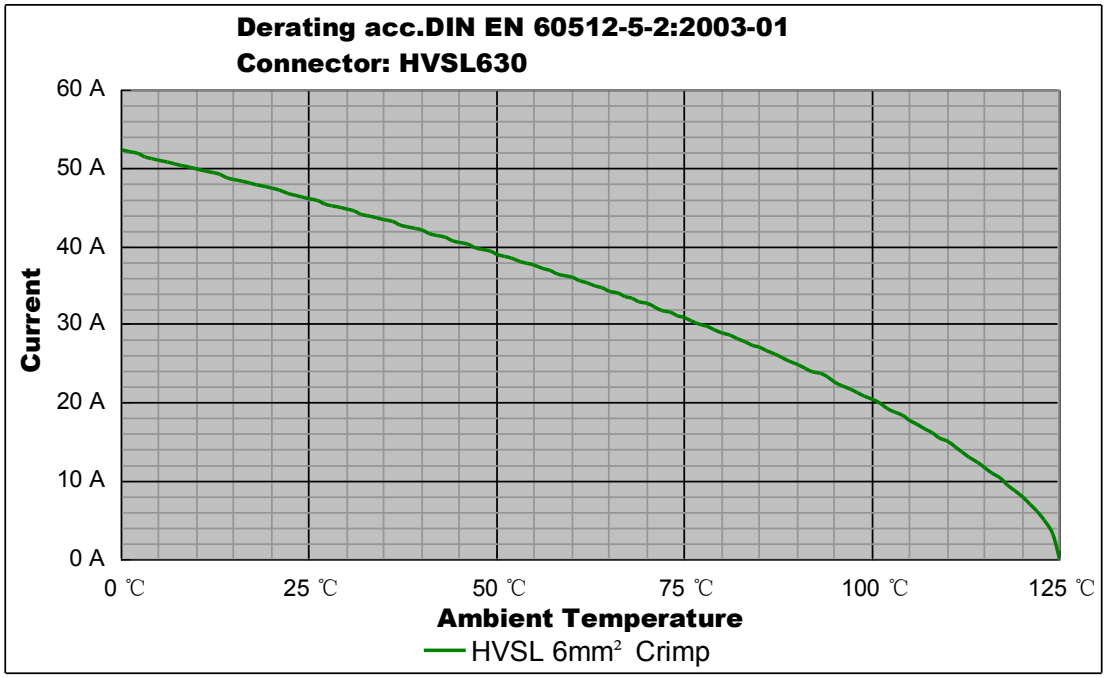

Remark: tests carried out on the complete connector.

Excel|Mate (HVSL633 3 pin connector)

HVSL633

HVSL633 is a 3 position connector with a current carrying capacity from 23 to 40A and 2.5 to 6mm^2 crimping cable.

Specially designed for DC-DC, air-conditioner, and others xEV devices' equipment.

KEY FEATURES

- Integrated internal HVIL
- Current rating up to 40A
- Two-stage, tool or thumb activated latching
- No tool required to unmate
- Sealing, IP67 (mated), IP6K9K
- Touch-proof, IP2XB
- Multiple coding positions
- CPA available

MECHANICAL	
Durability	≥ 50 mating cycles
Wire range	2.5 to 6 mm^2 shielded wire (2.5mm^2 only for plug)
Insertion and extraction force	< 100N
Connection type	Crimping
Latching style	Two stage, finger actuated
HVIL	Integrated
CPA	Available
ELECTRICAL	
Rated voltage	800V DC
Rated current	40A Max @ ambient temperature 70°C
Insulator resistance	> 200MΩ
Dielectric withstand voltage	3000V AC
Shielding	360° from wire to device
ENVIRONMENTAL	
Sealing	IP67, IP6K9K (mated)
Touch-proof	IP2XB
Temperature range	-40°C to 125°C
MATERIAL	
Terminals	Copper/copper alloy with tin plating
Housing	PA66 + GF

RECEPTACLE HVSL633

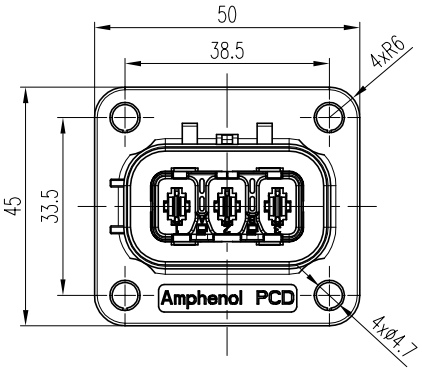

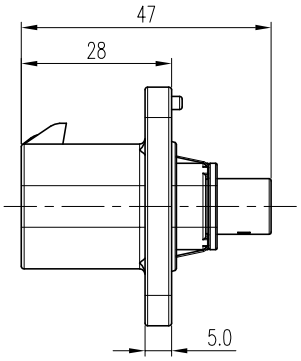

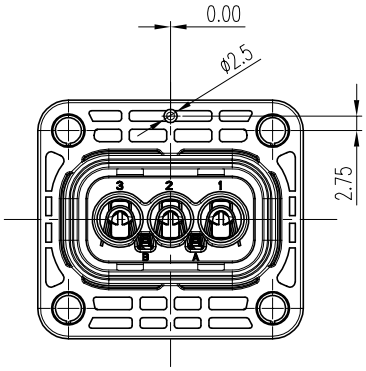

CONTACTS

All connectors do not include contacts. Please order them separately (ref: P/N below)	
Pin contact: crimping	Socket signal contact (HVIL)
P/N: C310003622	P/N: C310003614
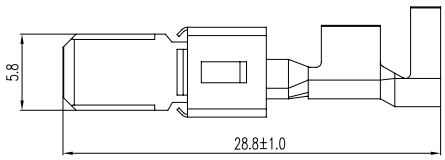	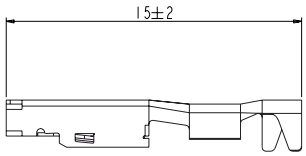
4 to 6mm^2 unshielded wire	0.5mm^2 unshielded wire

PANEL MOUNTING DIMENSION

PART NUMBER	INSERT ORIENTATION	PANEL MOUNTED DIMENSION
HVSL633 023 A	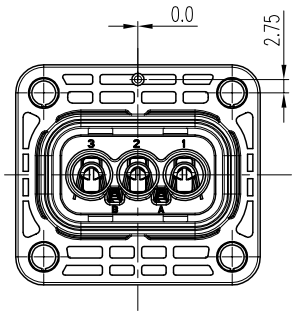	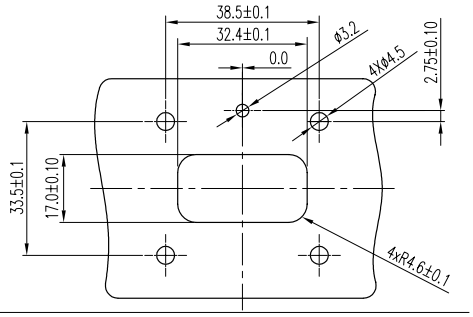
HVSL633 023 B	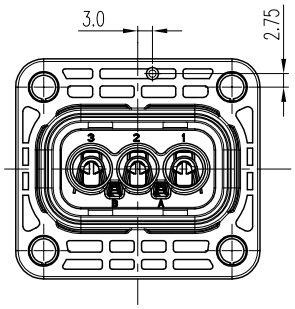	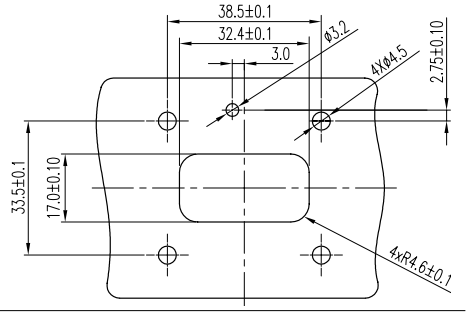
HVSL633 023 C	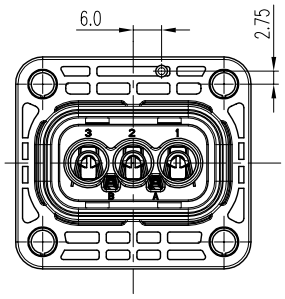	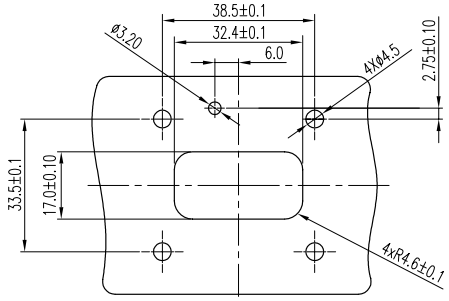
HVSL633 023 D	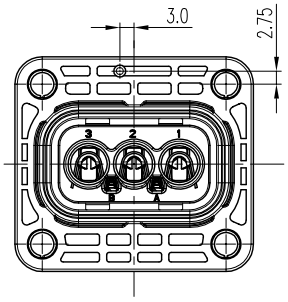	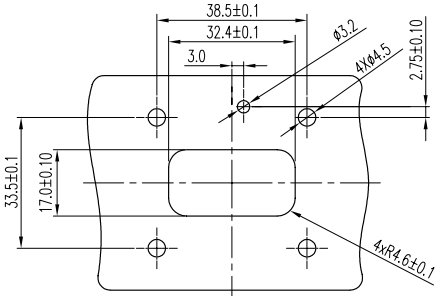
HVSL633 023 E	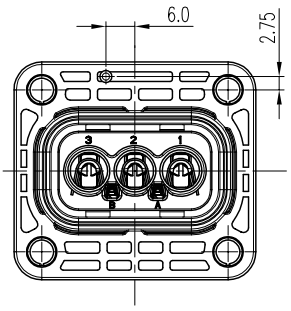	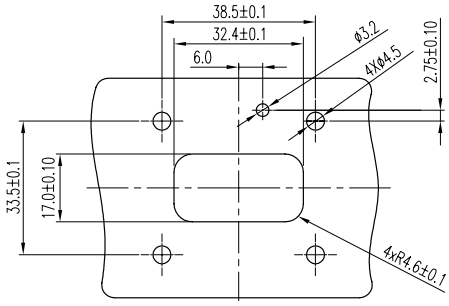

RECEPTACLE HVSLC633

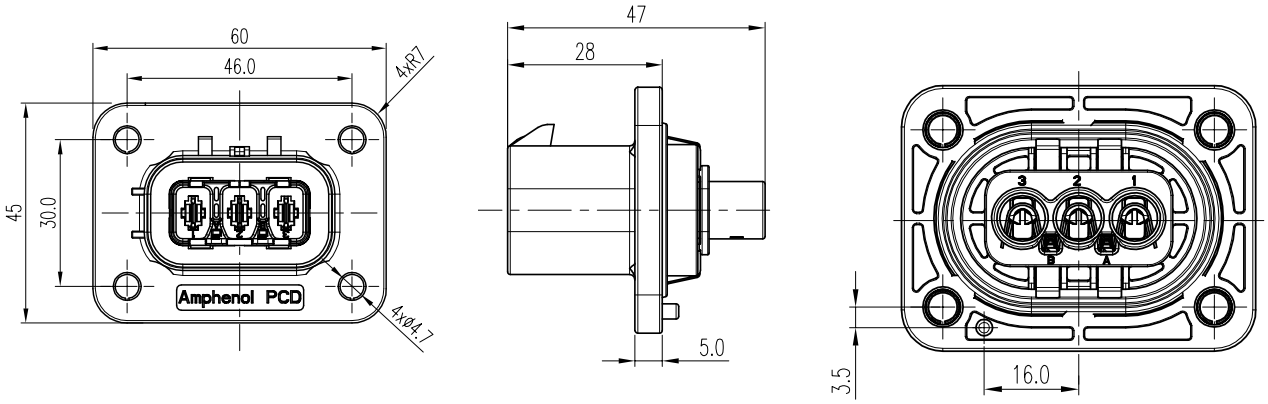

CONTACTS

All connectors do not include contacts. Please order them separately (ref: P/N below)	
Pin contact: crimping	Socket signal contact (HVIL)
P/N: C310003622	P/N: C310003614
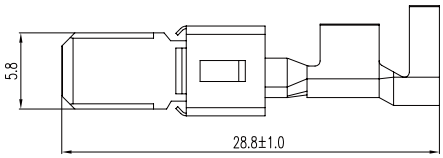	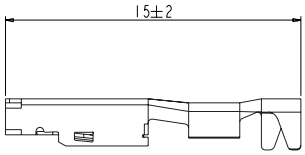
4 to 6mm^2 unshielded wire	0.5mm^2 unshielded wire

PANEL MOUNTING DIMENSION

PART NUMBER	INSERT ORIENTATION	PANEL MOUNTED DIMENSION
HVSLC633 023 A	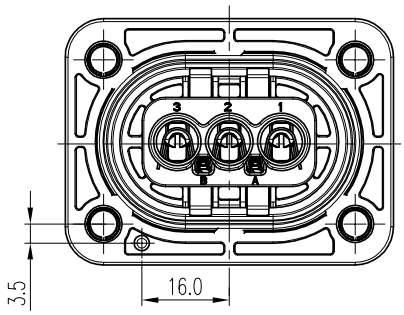	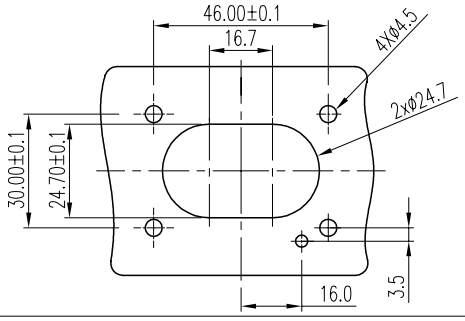
HVSLC633 023 B	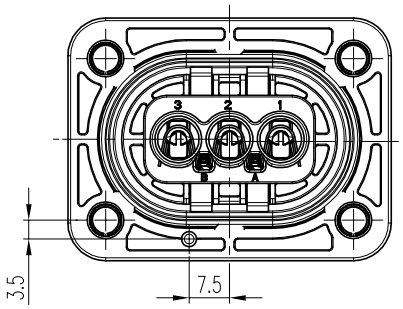	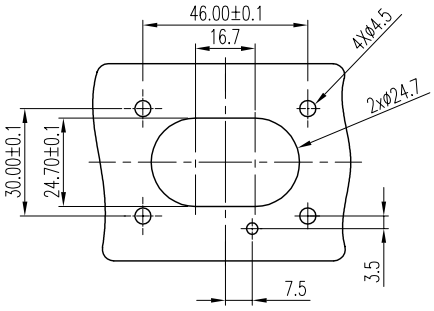
HVSLC633 023 C	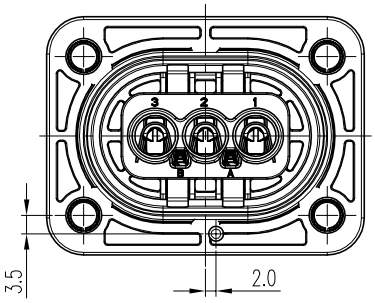	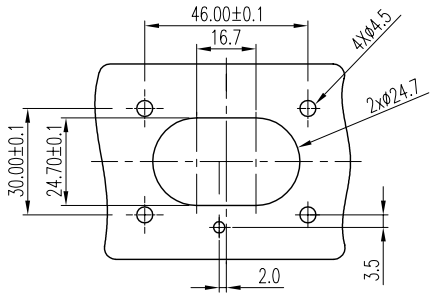
HVSLC633 023 D	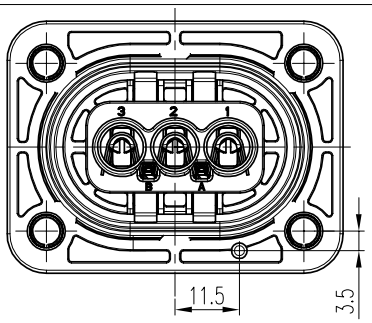	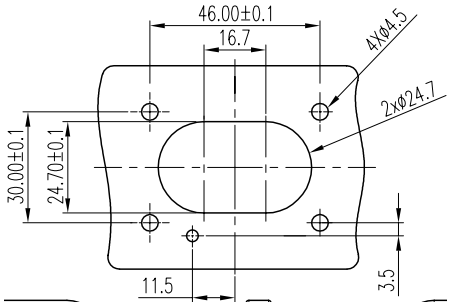

Excel|Mate Eco (HVSL 633)

PLUG

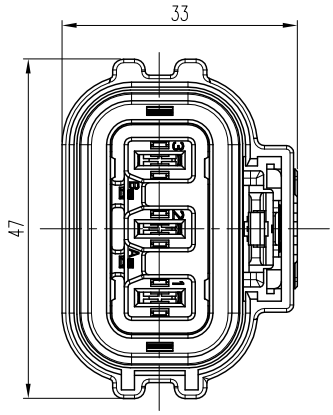

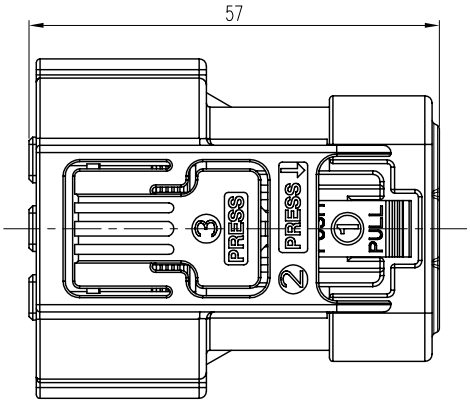

INSERT ORIENTATIONS

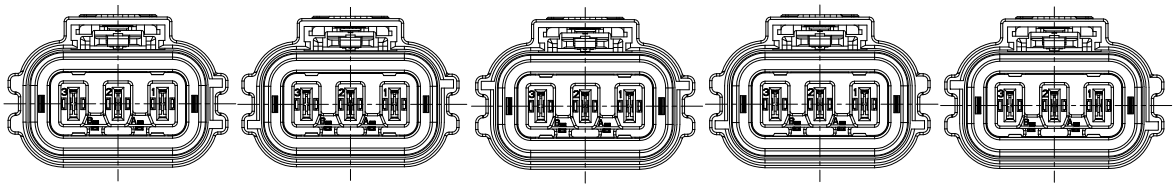

	Coding A	Coding B	Coding C	Coding D	Coding E
P/N	HVSL633 06 3 A	HVSL633 06 3 B	HVSL633 06 3 C	HVSL633 06 3 D	HVSL633 06 3 E

CONTACTS

All connectors do not include contacts. Please order them separately (ref: P/N below)		
Socket contact: crimping	Socket contact: crimping	HVIL contacts
P/N: C310023506	P/N: C310003623	Integrated, no need to buy.
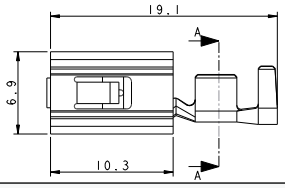	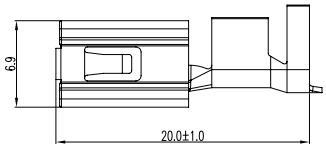	
2.5mm^2 shielded wire	4 to 6mm^2 shielded wire	

HOW TO ORDER: PLUG

		HVSL633	06	3	A	0	04	I
Product type:	**06:** Straight plug							
Position:	**3:** 3 positions							
Coding / Alternate position:	**A:** Coding A **B:** Coding B **C:** Coding C **D:** Coding D **E:** Coding E							
Interlock:	**0:** Without interlock **1:** With interlock							
Cable size:	**03:** 2.5mm^2 **04:** 4mm^2 **06:** 6mm^2							
Wire type:	**I:** Individually shielded wire							

HOW TO ORDER: RECEPTACLES

		HVSL633	02	3	A
Product type:	**02:** Box mounted receptacle				
Position:	**3:** 3 positions				
Coding / Alternate position:	**A:** Coding A **B:** Coding B **C:** Coding C **D:** Coding D **E:** Coding E				

		HVSLC633	02	3	A
Product type:	**02:** Box mounted receptacle				
Position:	**3:** 3 positions				
Coding / Alternate position:	**A:** Coding A **B:** Coding B **C:** Coding C **D:** Coding D				

CHARTS (HVSL 633)

HVSL 633 | Temperature Rise

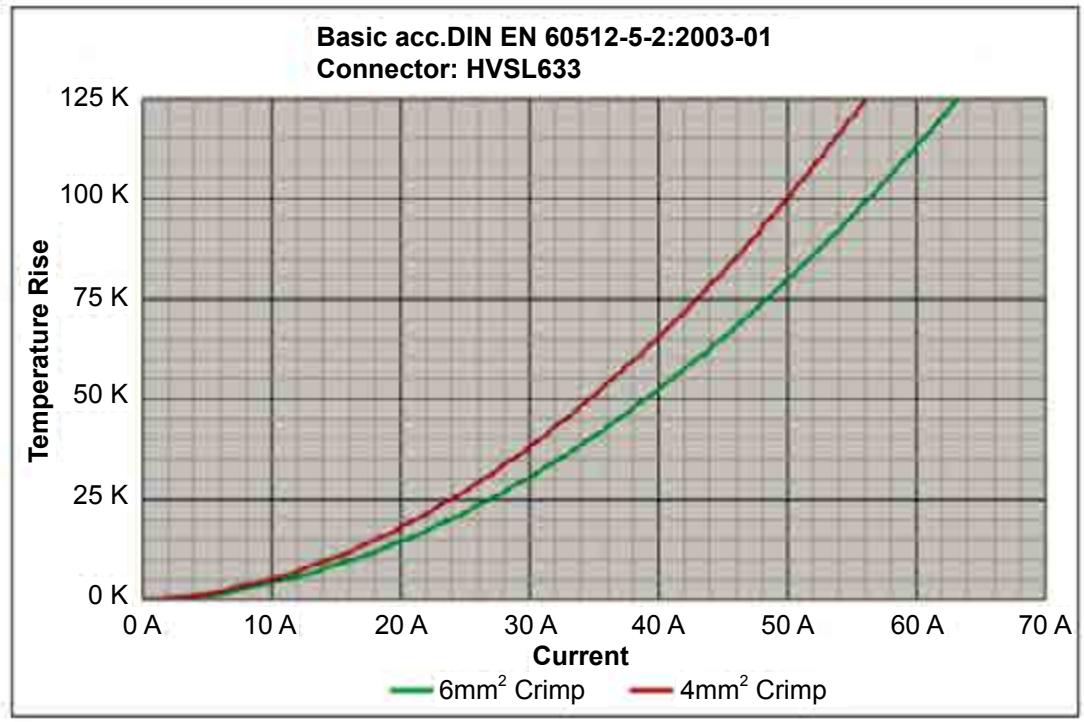

HVSL 633 | Derating Curve

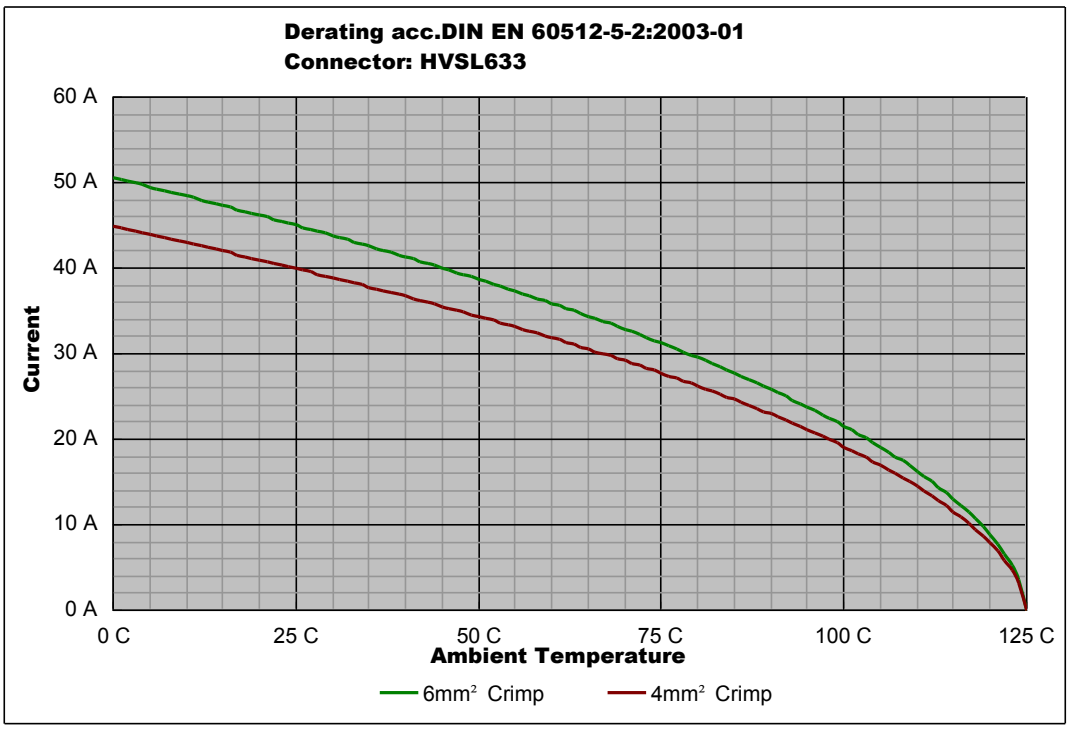

Remark: tests carried out on the complete connector.

Excel|Mate Eco (HVSL280 3 POSITION CONNECTOR)

HVSL280

HVSL280 is a 3 position connector with plastic housing, high voltage , integrated HVIL. It provides a current carrying capacity from 16 to 23A and 2.5 to 4mm^2 crimping cable.

Specially designed for DC-DC, air-conditioner, and other equipment in xEV device applications.

KEY FEATURES

- Integrated internal HVIL
- Current rating up to 23A
- Two-stage, tool or thumb activated latching
- No tool required to unmate
- Sealing, IP67 (mated), IP6K9K
- Touch-proof, IP2XB
- Multiple coding positions
- CPA available

MECHANICAL	
Durability	≥ 50 mating cycles
Wire range	2.5 to 4 mm^2 shielded wire
Insertion and extraction force	< 100N
Connection type	Crimping
Latching style	Two stage, finger actuated
HVIL	Integrated
CPA	Available
ELECTRICAL	
Rated voltage	800V DC
Rated current	23A Max @ ambient temperature 70°C
Insulator resistance	> 200MΩ
Dielectric withstand voltage	3000V AC
Shielding	360° from wire to device
ENVIRONMENTAL	
Sealing	IP67, IP6K9K (mated)
Touch-proof	IP2XB
Temperature range	-40°C to 125°C
MATERIAL	
Terminals	Copper/copper alloy with tin plating
Housing	PA66 + GF

RECEPTACLE

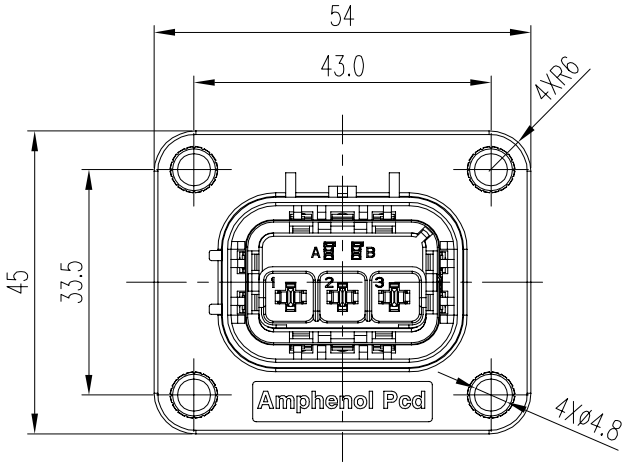

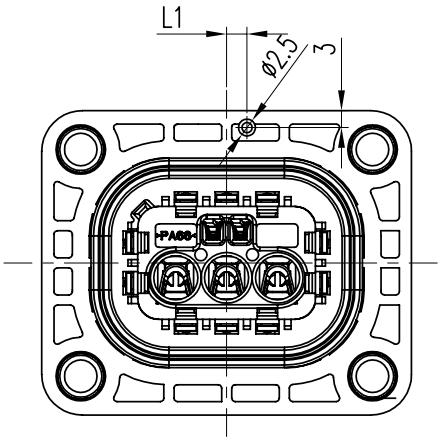

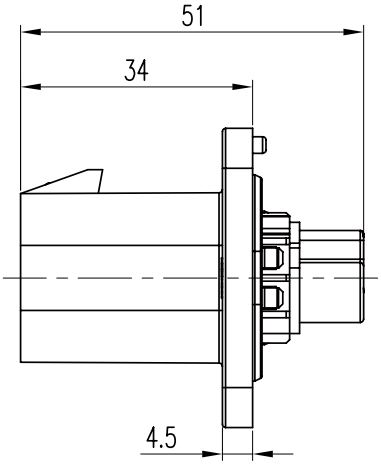

CONTACTS

All connectors do not include contacts. Please order them separately (ref: P/N below)	
For HVSL280023XX04	For HVSL280023XX04
Pin contact: crimping	Pin signal contact (HVIL)
P/N: C310003611	P/N: C310003613
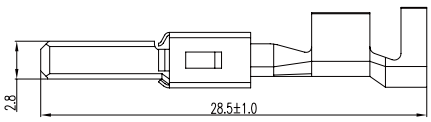	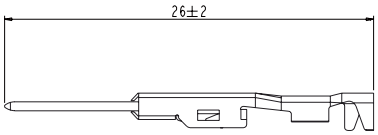
2.5 to 4mm^2 unshielded wire	0.5mm^2 unshielded wire

PANEL MOUNTING DIMENSIONS

CODING	A	B	C	D	E
L1 (Receptacle)	0	3	6	-3	-6
L1 (Panel mount)	0	-3	-6	3	6

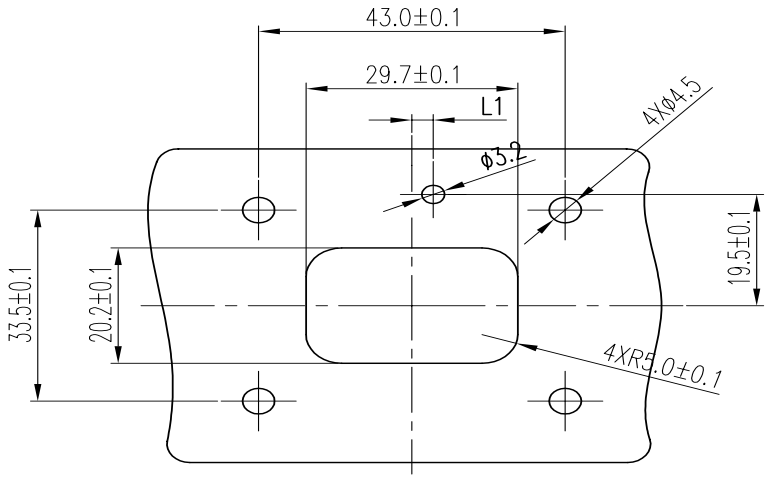

MOUNTING INTERFACE REFERENCE

INSERT ORIENTATIONS

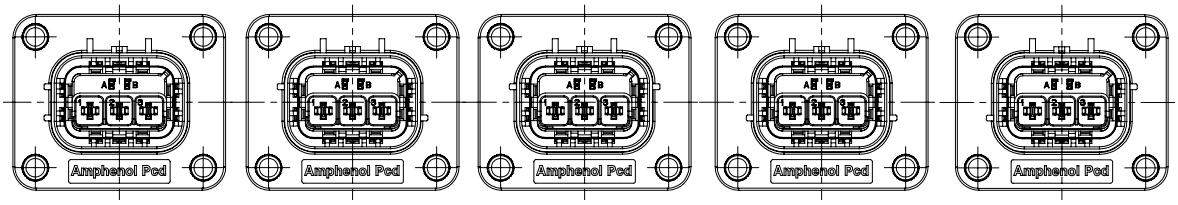

	Coding A	Coding B	Coding C	Coding D	Coding E
P/N	HVSL280 02 3 A	HVSL280 02 3 B	HVSL280 02 3 C	HVSL280 02 3 D	HVSL280 02 3 E

PLUG

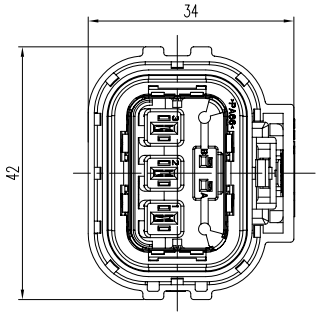

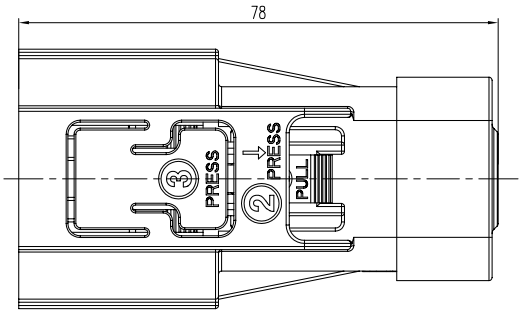

CONTACTS

All connectors do not include contacts. Please order them separately (ref: P/N below)	
For HVSL280063XX04XX	For HVSL280063XX04XX
Socket contact	Socket signal contact (HVIL)
P/N: C310003612	P/N: C310003614
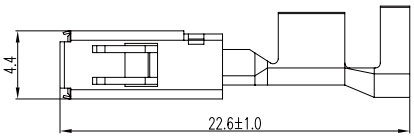	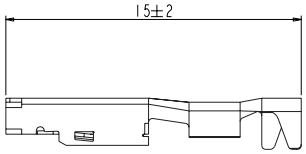
2.5 to 4mm^2 shielded wire	0.5mm^2 unshielded wire

Sealing gasket for HVSL280063XX04XX:

12	11	10
P/N: C270003607	P/N: C2700036071	P/N: C2700036072
12 ± 0.2 mm (Wire OD)	11 ± 0.2 mm (Wire OD)	10 ± 0.2 mm (Wire OD)

INSERT ORIENTATIONS

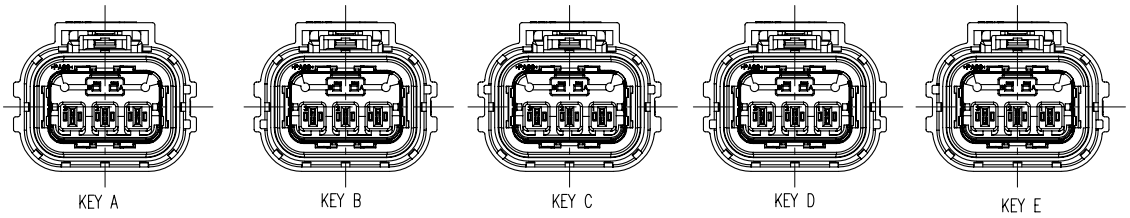

	Coding A	Coding B	Coding C	Coding D	Coding E
P/N	HVSL280 06 3 A	HVSL280 06 3 B	HVSL280 06 3 C	HVSL280 06 3 D	HVSL280 06 3 E

HOW TO ORDER: PLUG

		HVSL280	06	3	A	0	03	10
Product type:	**06:** Straight plug							
Position:	**3:** 3 positions							
Coding / Alternate position:	**A:** Coding A **B:** Coding B **C:** Coding C **D:** Coding D **E:** Coding E							
Interlock:	**0:** Without interlock **1:** With interlock							
Cable size:	**03:** 2.5mm^2 **04:** 4mm^2							
Sealing gasket:	**10:** 10mm (Wire OD) **11:** 11mm (Wire OD) **12:** 12mm (Wire OD)							

HOW TO ORDER: RECEPTACLE

		HVSL280	02	3	A
Product type:	**02:** Box mounted receptacle				
Position:	**3:** 3 positions				
Coding / Alternate position:	**A:** Coding A **B:** Coding B **C:** Coding C **D:** Coding D **E:** Coding E				

CHARTS (HVSL 280)

HVSL 280 | Temperature Rise

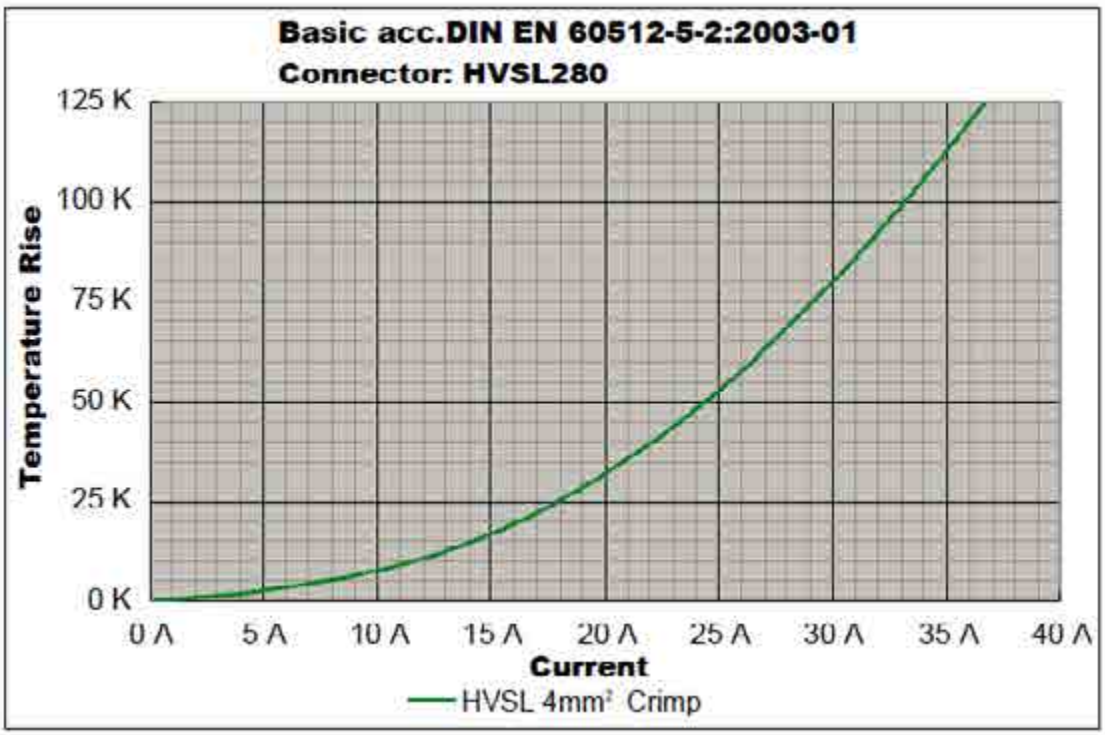

HVSL 280 | Derating Curve

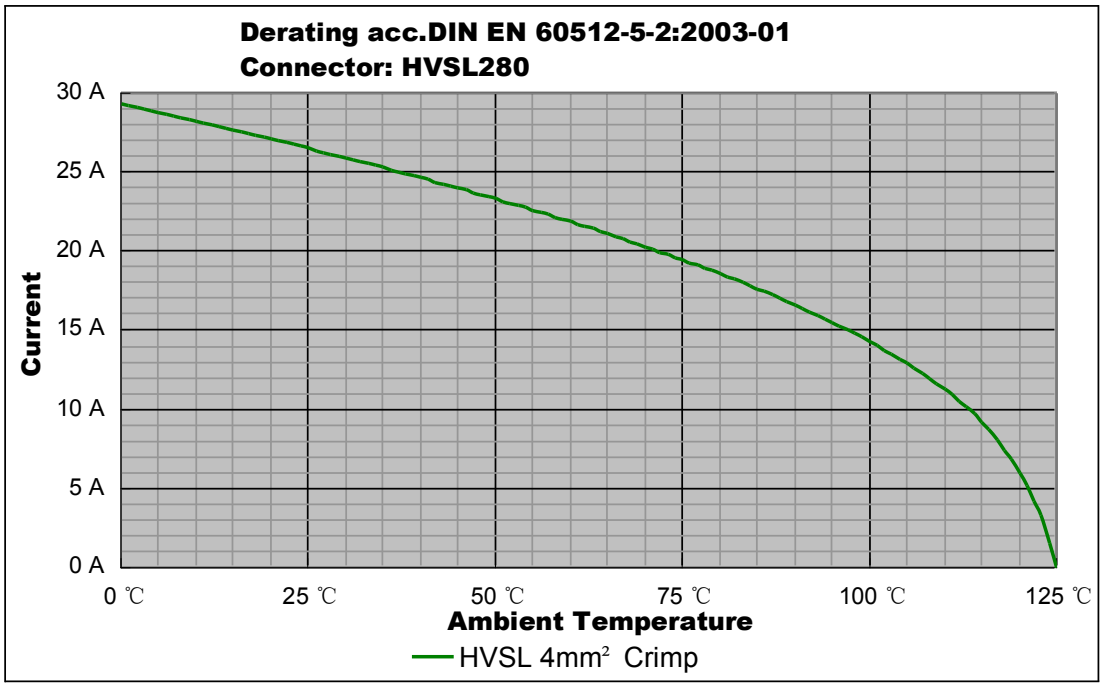

Remark: tests carried out on the complete connector.

Excel|Mate Eco (HVSL282 2 PIN connector)

HVSL282

HVSL282 is a 2 position connector with plastic housing, high voltage, integrated HVIL. It provides a current carrying capacity from 16 to 32A and 2.5 to 4mm^2 crimping cable.

Specially designed for DC-DC, air-conditioner, and other equipment in xEV device applications.

KEY FEATURES

- Integrated internal HVIL
- Current rating up to 32A
- Two-stage, tool or thumb activated latching
- No tool required to unmate
- Sealing, IP67 (mated), IP6K9K
- Touch-proof, IP2XB
- Multiple coding positions
- CPA available

MECHANICAL	
Durability	≥ 50 mating cycles
Wire range	2.5 to 4 mm^2 shielded wire
Insertion and extraction force	< 100N
Connection type	Crimping
Latching style	Two stage, finger actuated
HVIL	Integrated
CPA	Available
ELECTRICAL	
Rated voltage	800V DC
Rated current	32A Max @ ambient temperature 70°C
Insulator resistance	> 200MΩ
Dielectric withstand voltage	3000V AC
Shielding	360° from wire to device
ENVIRONMENTAL	
Sealing	IP67, IP6K9K (mated)
Touch-proof	IP2XB
Temperature range	-40°C to 125°C
MATERIAL	
Terminals	Copper/copper alloy with tin plating
Housing	PA66 + GF

Excel|Mate Eco (HVSL 282)

RECEPTACLE

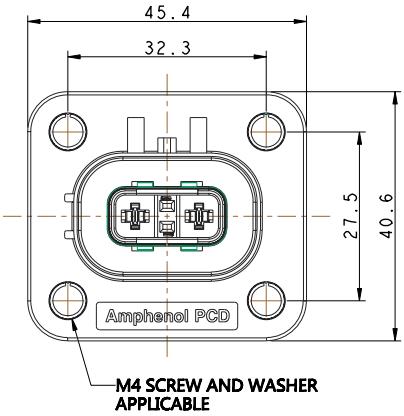

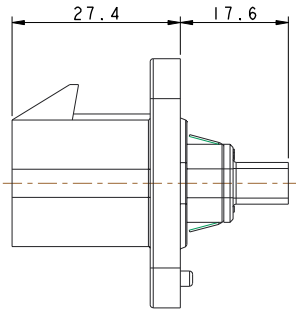

CONTACTS

All connectors do not include contacts. Please order them separately (ref: P/N below)	
Pin contact: crimping	Socket signal contact (HVIL)
P/N: C310003611	P/N: C310003614
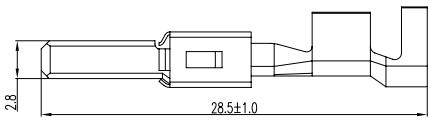	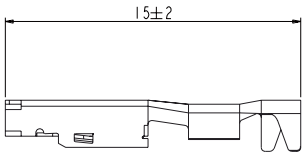
2.5 to 4mm^2 unshielded wire	0.5mm^2 unshielded wire

PANEL MOUNTING DIMENSION

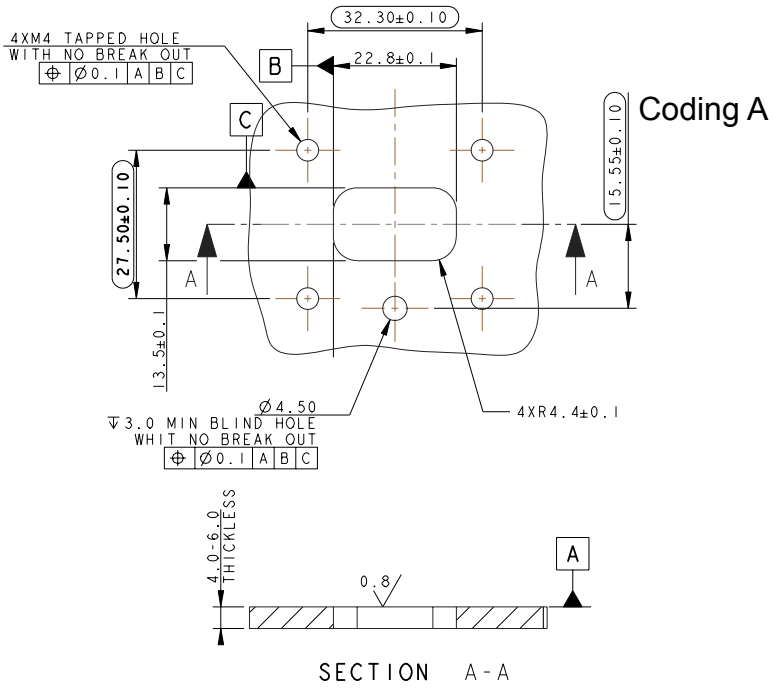

PANEL MOUNTING HOLES POSITIONS

PART NUMBER	INSERT ORIENTATION	PANEL MOUNTING DIMENSION
HVSL282 02 2 A	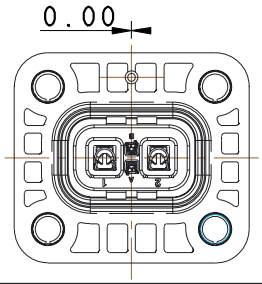	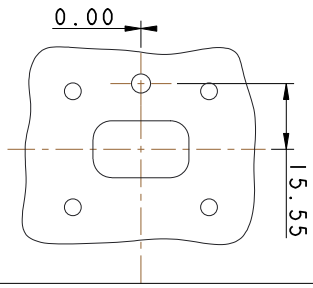
HVSL282 02 2 B	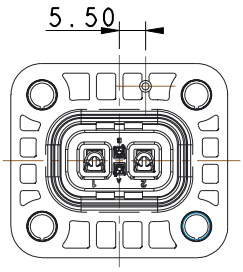	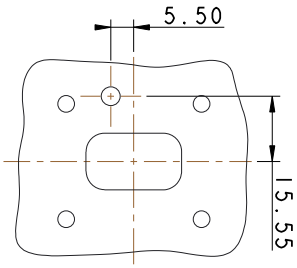
HVSL282 02 2 C	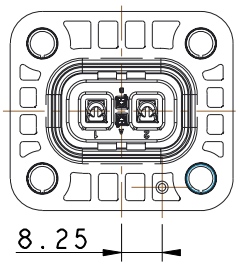	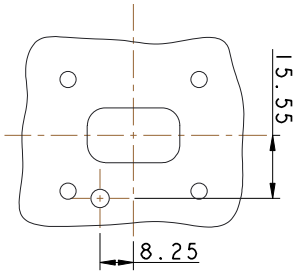
HVSL282 02 2 D	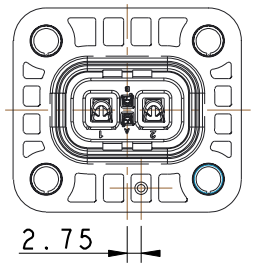	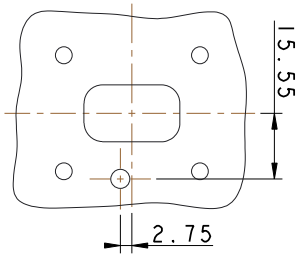
HVSL282 02 2 E	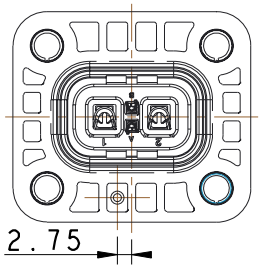	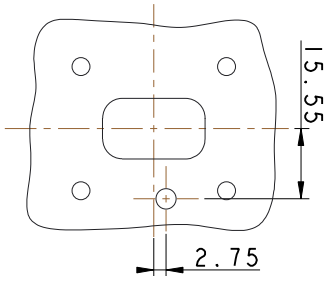
HVSL282 02 2 F	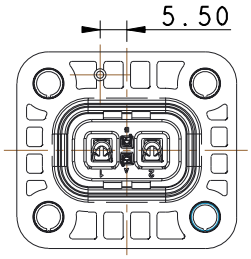	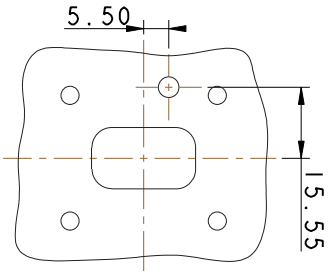

Excel|Mate Eco (HVSL 282)

RIGHT-ANGLE RECEPTACLE

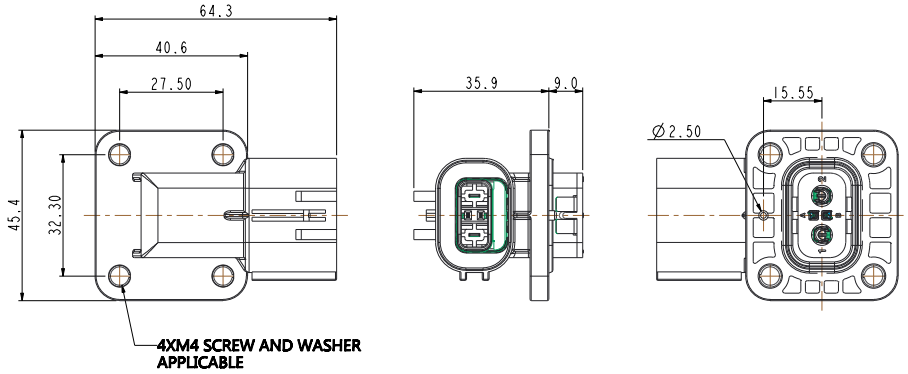

CONTACTS

All connectors do not include contacts. Please order them separately (ref: P/N below)	
Socket contact: crimping	Socket signal contact (HVIL)
P/N: C310003612	P/N: C310003614
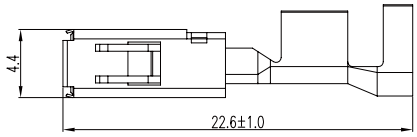	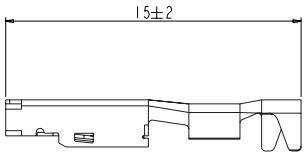
2.5 to 4mm^2 shielded wire	0.5mm^2 unshielded wire

PANEL MOUNTING DIMENSION

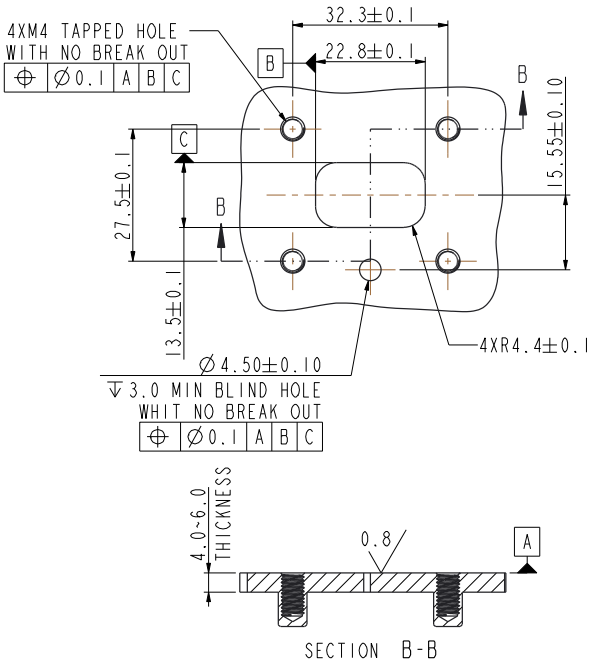

PANEL MOUNTING HOLES POSITIONS

PART NUMBER	INSERT ORIENTATION	PANEL MOUNTING DIMENSION
HVSL282 04 2 AX	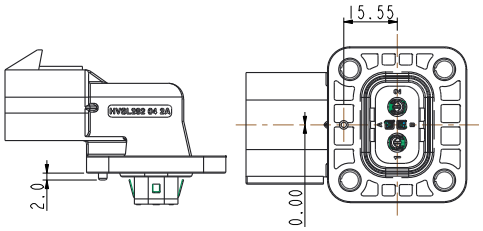	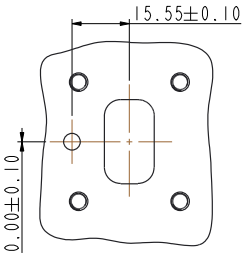
HVSL282 04 2 BX	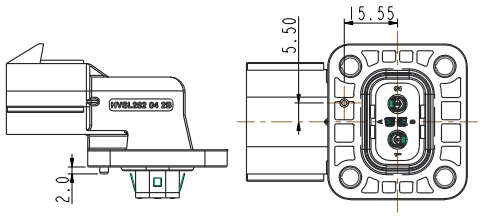	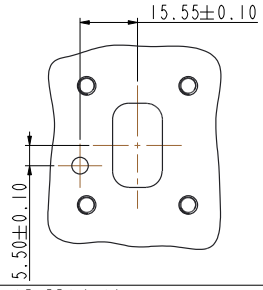
HVSL282 04 2 CX	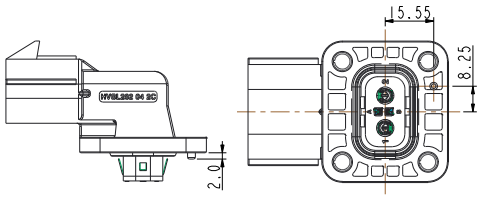	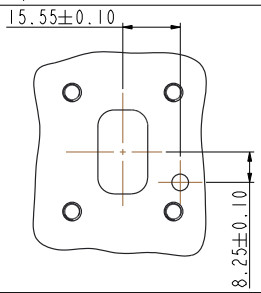
HVSL282 04 2 DX	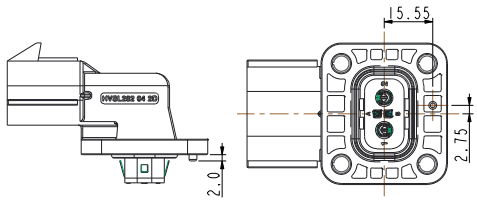	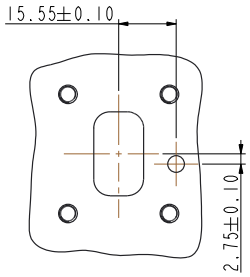
HVSL282 04 2 EX	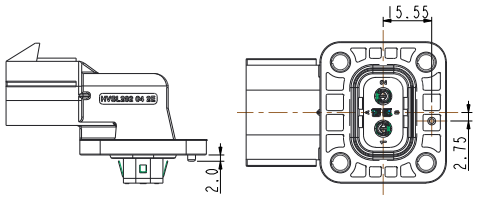	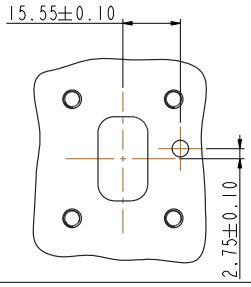
HVSL282 04 2 FX	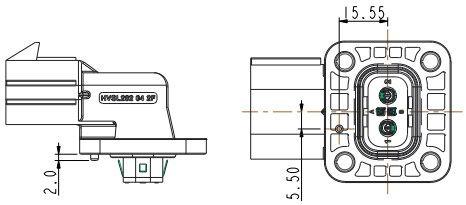	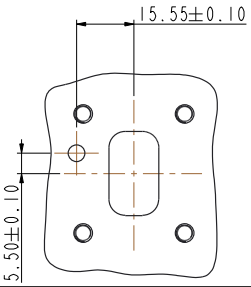

RECEPTACLE: METAL SHELL

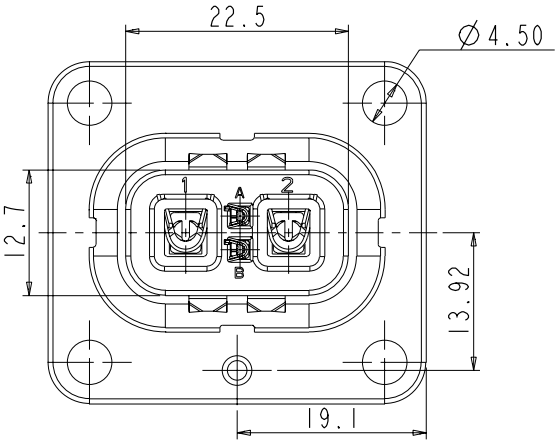

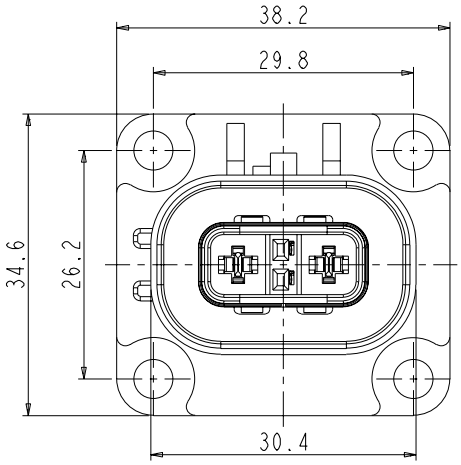

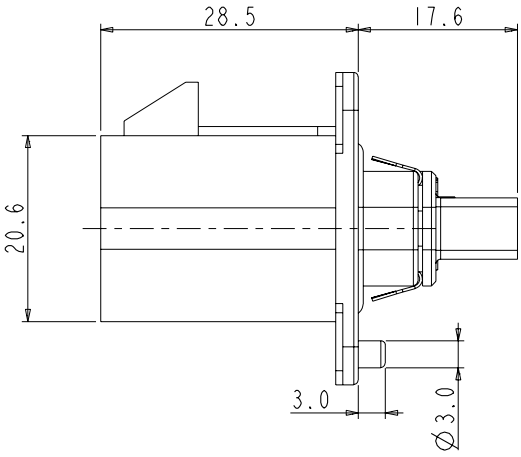

PANEL MOUNTING DIMENSION

PANEL CUT-OUT REFERENCE

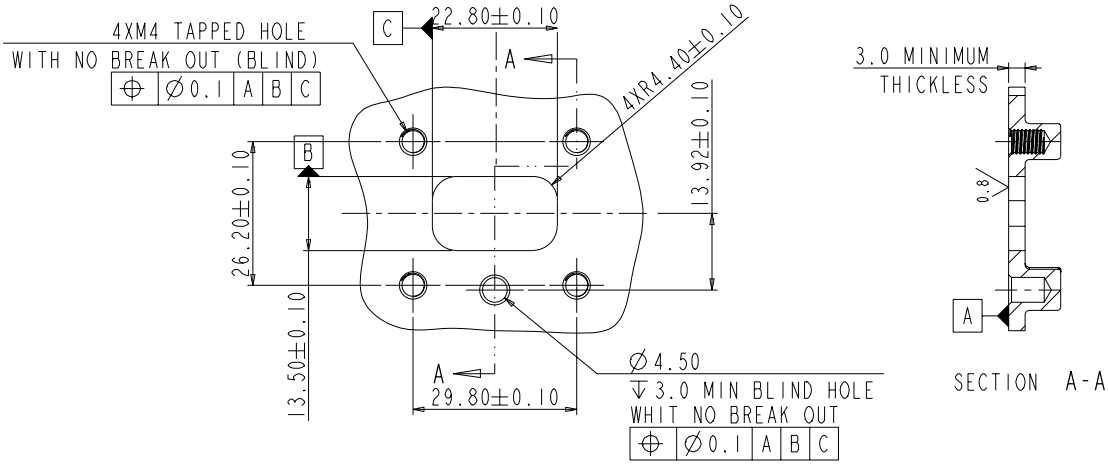

PLUG

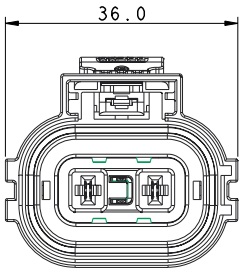

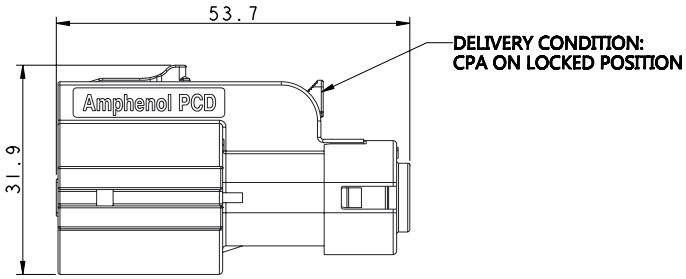

CONTACTS

All connectors do not include contacts. Please order them separately (ref: P/N below)	
Socket contact: crimping	HVIL contacts
P/N: C310003612	Integrated, no need to buy.
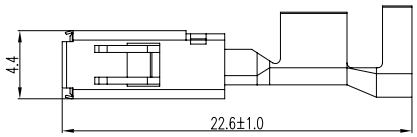	
2.5 to 4mm^2 shielded wire	

INSERT ORIENTATIONS

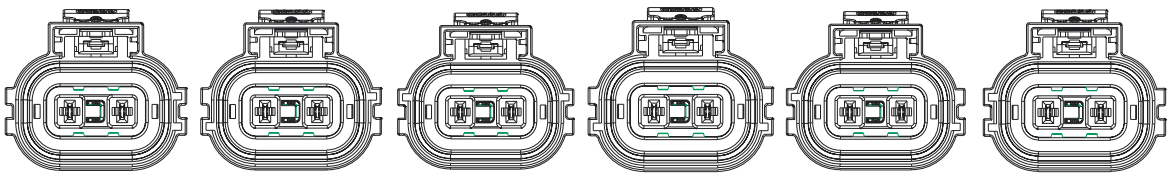

	Coding A	Coding B	Coding C	Coding D	Coding E	Coding F
P/N	HVSL282 06 2 A	HVSL282 06 2 B	HVSL282 06 2 C	HVSL282 06 2 D	HVSL282 06 2 E	HVSL282 06 2 F

HOW TO ORDER (HVSL 282)

HOW TO ORDER: PLUG

		HVSL282	06	2	A	0	03	I
Product type:	**06:** Straight plug							
Position:	**2:** 2 positions							
Coding / Alternate position:	**A:** Coding A **B:** Coding B **C:** Coding C	**D:** Coding D **E:** Coding E **F:** Coding F						
HVIL:	**0:** Without HVIL **1:** With HVIL							
Cable size:	**03:** 2.5mm^2 **04:** 4mm^2							
Wire type:	**I:** Individually shielded wire							

HOW TO ORDER: RECEPTACLES

		HVSL282	02	2	A
Product type:	**02:** Box mounted receptacle				
Position:	**2:** 2 positions				
Coding / Alternate position:	**A:** Coding A **B:** Coding B **C:** Coding C	**D:** Coding D **E:** Coding E **F:** Coding F			

		HVSL282	04	2	A	X
Product type:	**04:** Right-angle receptacle					
Position:	**2:** 2 positions					
Coding / Alternate position:	**A:** Coding A **B:** Coding B **C:** Coding C	**D:** Coding D **E:** Coding E **F:** Coding F				
HVIL	**0:** without HVIL **1:** with HVIL					

RECEPTACLE: METAL SHELL

		HVSLM282	02	2	A
Product type:	**02:** Box mounted receptacle				
Position:	**2:** 2 positions				
Coding / Alternate position:	**A:** Coding A **B:** Coding B **C:** Coding C	**D:** Coding D **E:** Coding E **F:** Coding F			

HVSL 282 | Temperature Rise

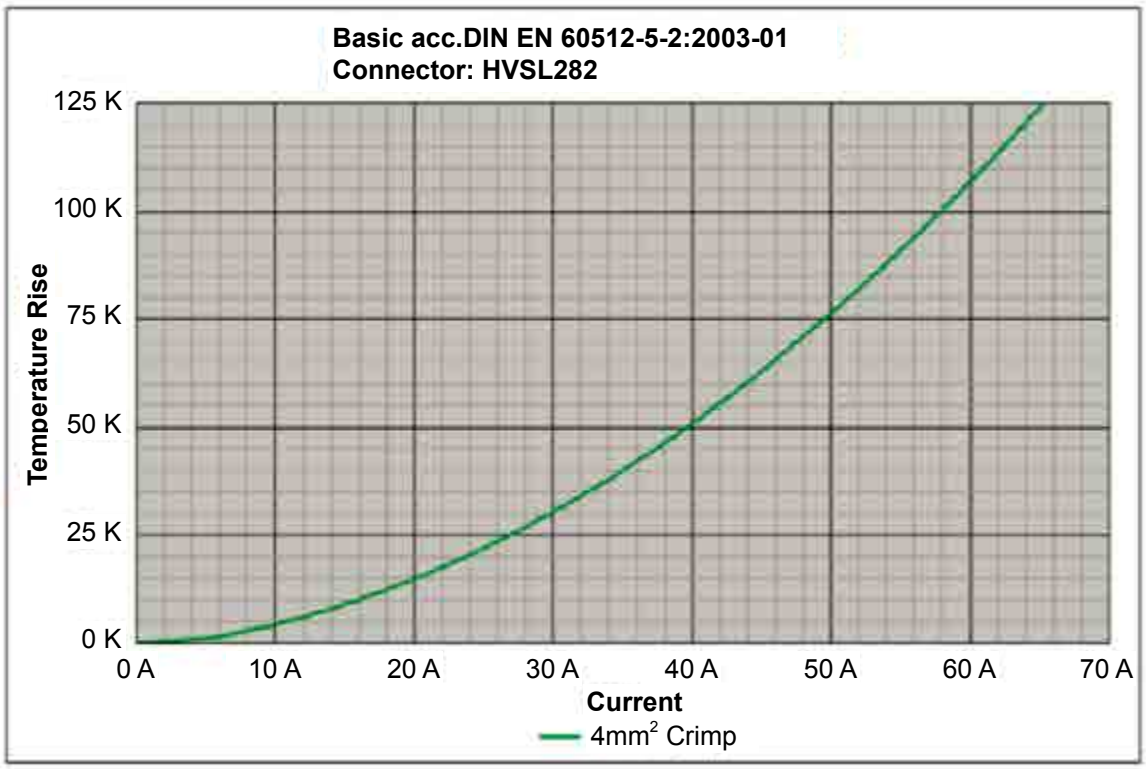

HVSL 282 | Derating Curve

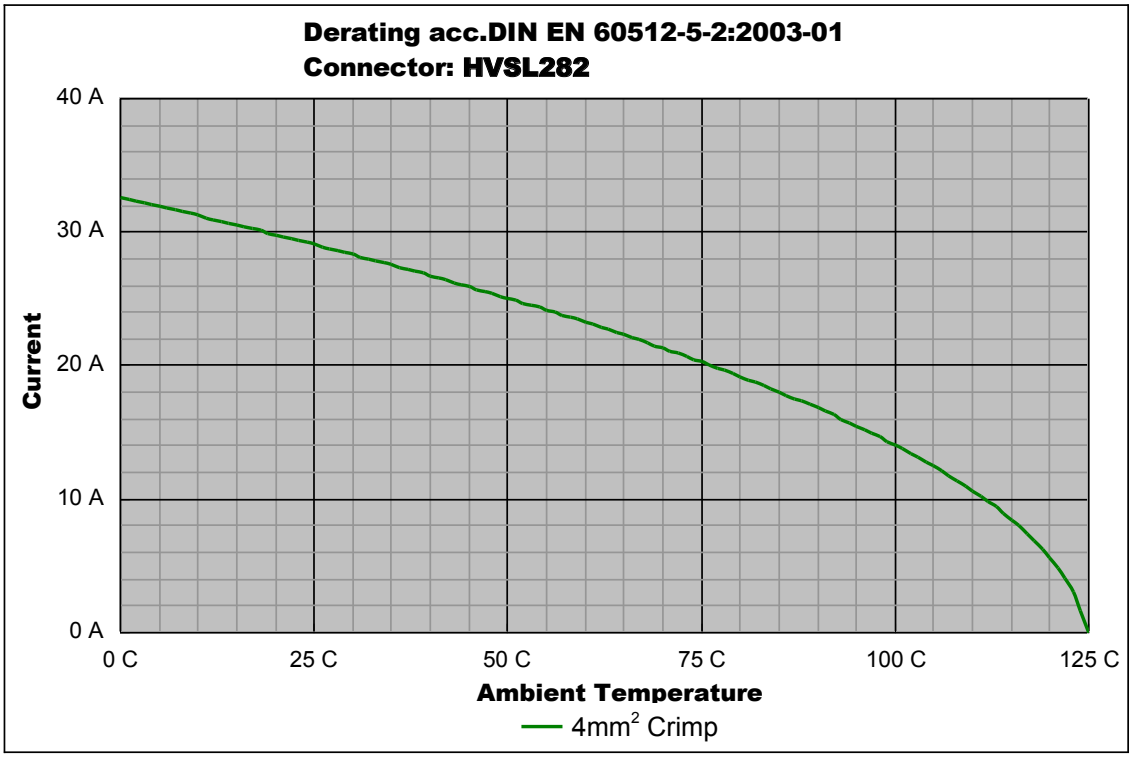

Remark: tests carried out on the complete connector.

Excel|Mate Eco (HVSL 362)

Excel|Mate Eco (HVSL362 2 PIN connector)

HVSL362

HVSL362 is a 2 position connector with plastic housing, high voltage, integrated HVIL. It provides a current carrying capacity up to 60A and a 6 to 10mm^2 crimping cable.

Specially designed for DC-DC, air-conditioner, and other equipment in xEV device applications.

KEY FEATURES

- Integrated internal HVIL
- Current rating up to 60A
- Two-stage, tool or thumb activated latching
- No tool required to unmate
- Sealing, IP67 (mated), IP6K9K
- Touch-proof, IP2XB
- Multiple coding positions
- CPA available

MECHANICAL	
Durability	≥ 50 mating cycles
Wire range	6 to 10mm^2 shielded wire
Insertion and extraction force	< 100N
Connection type	Crimping
Latching style	Two stage, finger actuated
HVIL	Integrated
CPA	Available
ELECTRICAL	
Rated voltage	800V DC
Rated current	60A Max @ ambient temperature 70°C
Insulator resistance	> 200MΩ
Dielectric withstand voltage	3000V AC
Shielding	360° from wire to device
ENVIRONMENTAL	
Sealing	IP67, IP6K9K (mated)
Touch-proof	IP2XB
Temperature range	-40°C to 125°C
MATERIAL	
Terminals	Copper/copper alloy with silver plating
Housing	PA66 + GF

RECEPTACLE

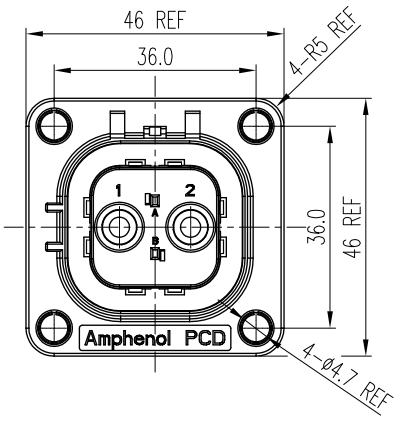

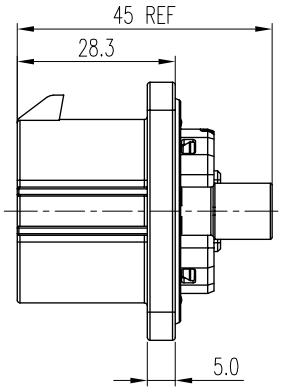

CONTACTS

All connectors do not include contacts. Please order them separately (ref: P/N below)	
CONTACTS	
HVIL contacts	6 to 10mm^2
P/N: C310003614	P/N: C3100235011

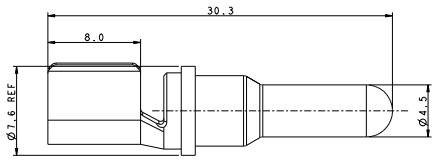

PANEL MOUNTING DIMENSION

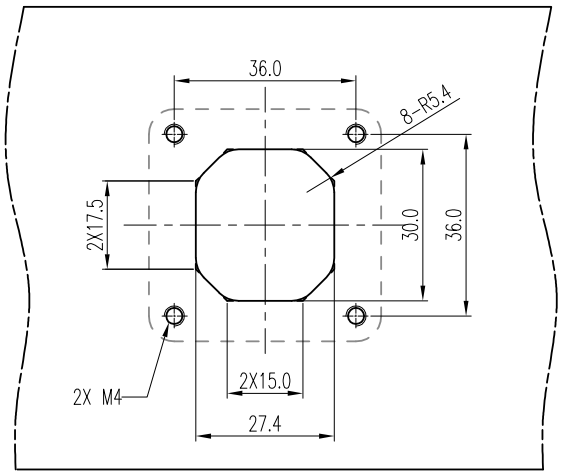

MOUNTING INTERFACE SPECIFICATION
RECOMMENDED THICKNESS:3.0mm Min

PANEL MOUNTING HOLES POSITIONS

PART NUMBER	INSERT ORIENTATION
HVSL362 022 A	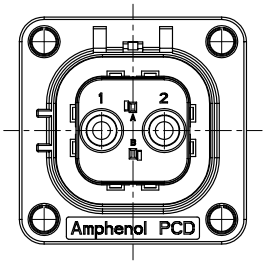
HVSL362 022 B	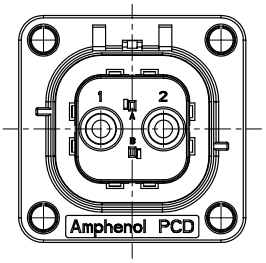
HVSL362 022 C	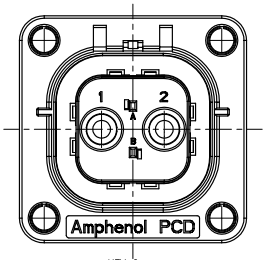
HVSL362 022 D	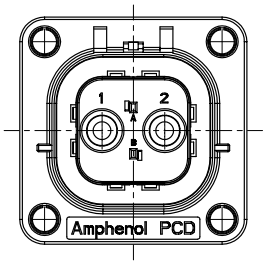
HVSL362 022 E	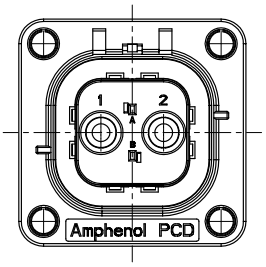

PLUG

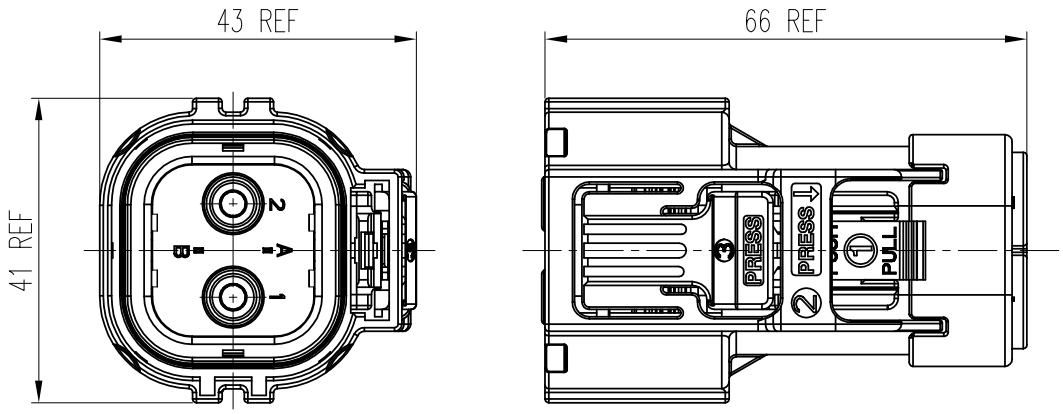

CONTACTS

All connectors do not include contacts. Please order them separately (ref: P/N below)	
CONTACTS	
HVIL contacts	6 to 10mm^2
Integrated, no need to buy.	P/N: C3100235021

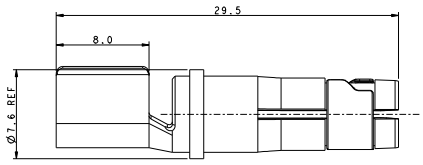

INSERT ORIENTATIONS

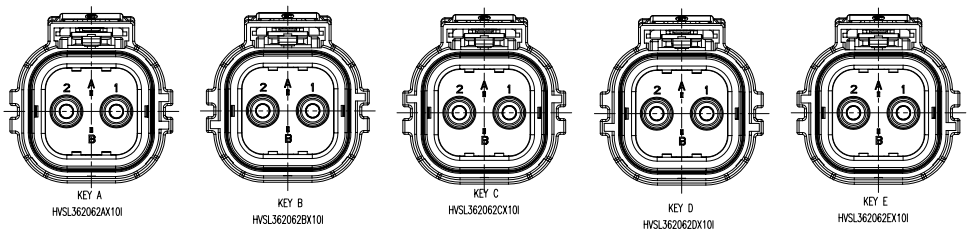

	Coding A	Coding B	Coding C	Coding D	Coding E
P/N	HVSL362 062 A	HVSL362 062 B	HVSL362 062 C	HVSL362 062 D	HVSL362 062 E

HOW TO ORDER (HVSL 362)

HOW TO ORDER: PLUG

		HVSL362	06	2	A	0	06	I
Product type:	**06:** Straight plug							
Position:	**2:** 2 positions							
Coding / Alternate position:	**A:** Coding A **B:** Coding B **C:** Coding C **D:** Coding D **E:** Coding E							
Interlock:	**0:** Without interlock **1:** With interlock							
Cable size:	**06:** $6mm^2$ **10:** $10mm^2$							
Wire type:	**I:** Individually shielded wire							

HOW TO ORDER: RECEPTACLE

		HVSL362	02	2	A
Product type:	**02:** Box mounted receptacle				
Position:	**2: 2** positions				
Coding / Alternate position:	**A:** Coding A **B:** Coding B **C:** Coding C **D:** Coding D **E:** Coding E				

HVSL 362 | Temperature Rise

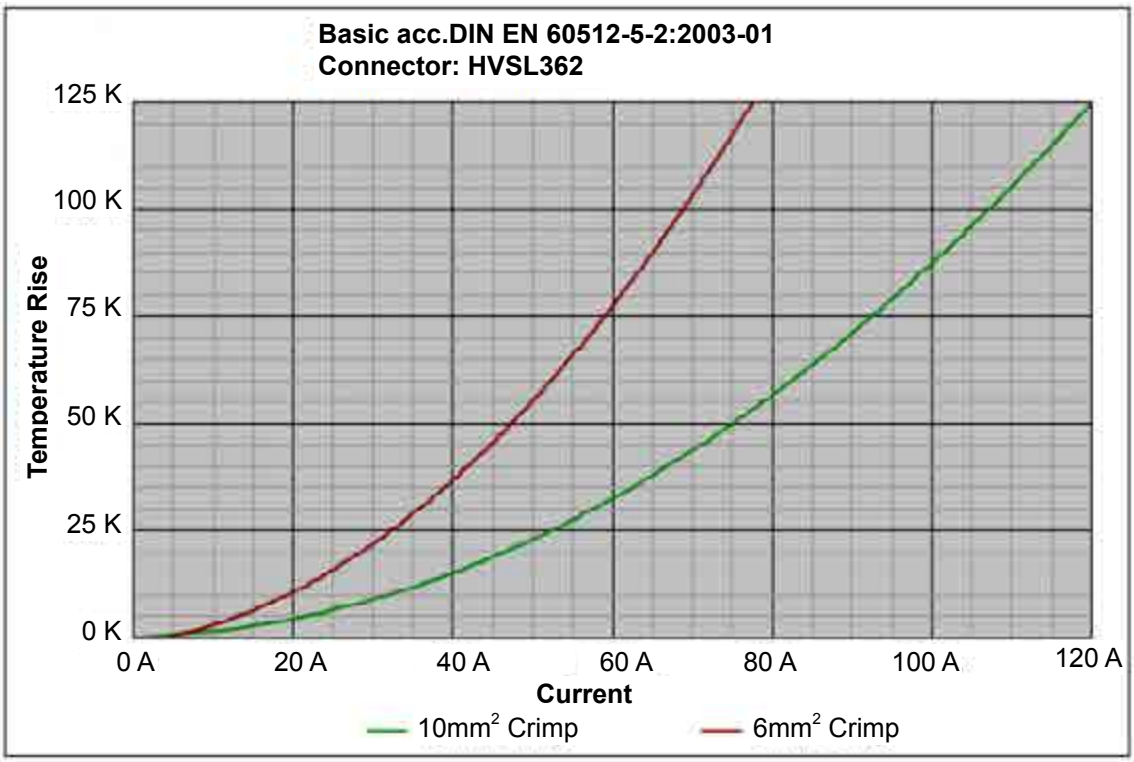

HVSL 362 | Derating Curve

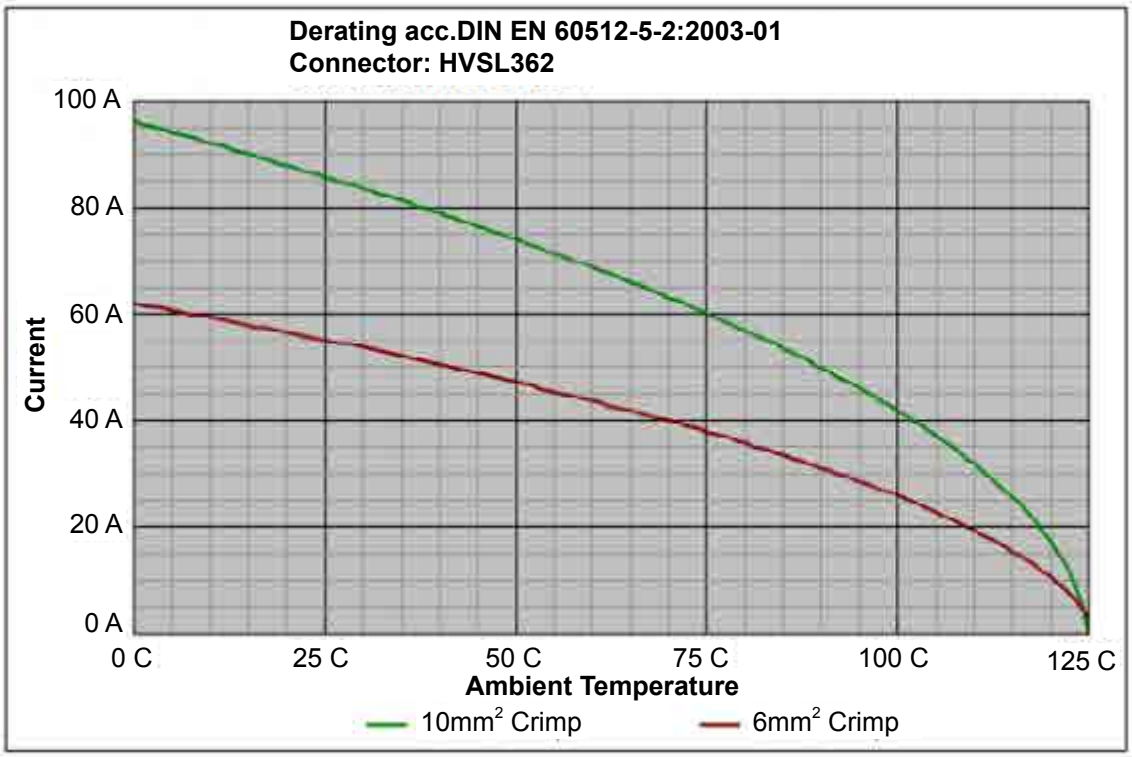

Remark: tests carried out on the complete connector.

Excel|Mate Eco (HVSL 364)

Excel|Mate Eco (HVSL364 4 PIN connector)

HVSL364

HVSL364 is a 4 position connector with plastic housing, high voltage, integrated HVIL. It provides a current carrying capacity up to 46A and 2.5 to 6mm^2 crimping cable.

Specially designed for DC-DC, air-conditioner, and other equipment in xEV device applications.

KEY FEATURES

- Integrated internal HVIL
- Current rating up to 46A
- Two-stage, tool or thumb activated latching
- No tool required to unmate
- Sealing, IP67 (mated), IP6K9K
- Touch-proof, IP2XB
- Multiple coding positions
- CPA available

MECHANICAL	
Durability	≥ 50 mating cycles
Wire range	2.5 to 6mm^2 shielded wire
Insertion and extraction force	< 100N
Connection type	Crimping
Latching style	Two stage, finger actuated
HVIL	Integrated
CPA	Available
ELECTRICAL	
Rated voltage	800V DC
Rated current	46A Max @ ambient temperature 70°C
Insulator resistance	> 200MΩ
Dielectric withstand voltage	3000V AC
Shielding	360° from wire to device
ENVIRONMENTAL	
Sealing	IP67, IP6K9K (mated)
Touch-proof	IP2XB
Temperature range	-40°C to 125°C
MATERIAL	
Terminals	Copper/copper alloy with silver plating
Housing	PA66 + GF

RECEPTACLE

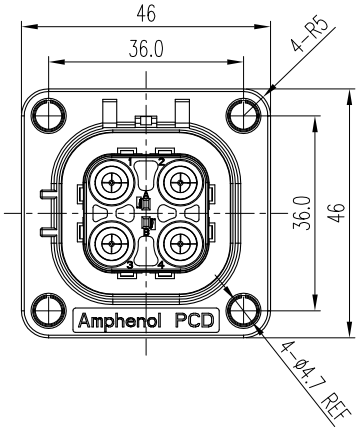

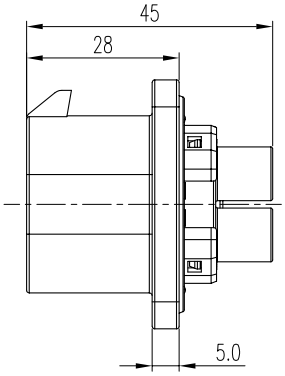

CONTACTS

All connectors do not include contacts. Please order them separately (ref: P/N below)		
CONTACTS		
HVIL contacts	4 to 6mm^2	2.5mm^2
P/N: C310003614	P/N: C310026000	P/N: C310026002

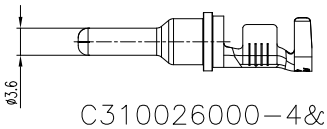

C310026000–4&6mm^2 wire
C310026002–2.5mm^2 wire

PANEL MOUNTING DIMENSION

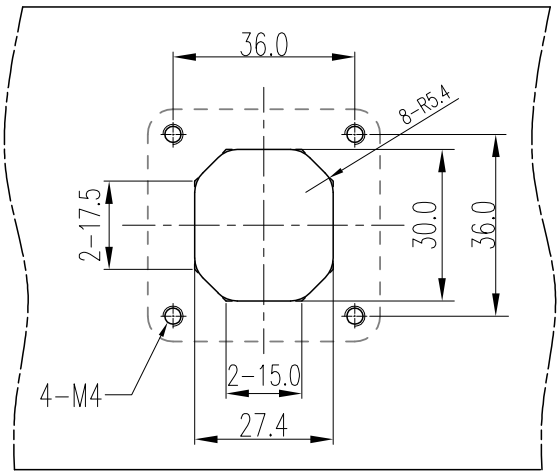

MOUNTING INTERFACE SPECIFICATION
RECOMMENDED THICKNESS:3.0mm Min

PANEL MOUNTING HOLES POSITIONS

PART NUMBER	INSERT ORIENTATION
HVSL364 024 A	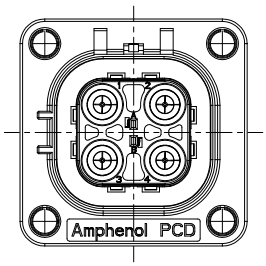
HVSL364 024 B	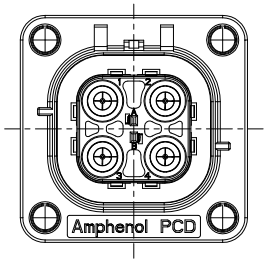
HVSL364 024 C	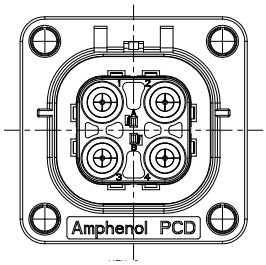
HVSL364 024 D	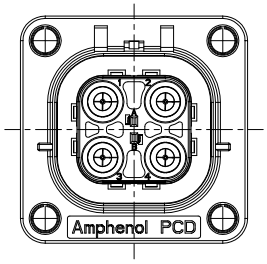
HVSL364 024 E	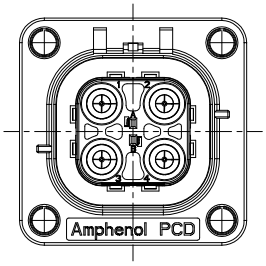

PLUG

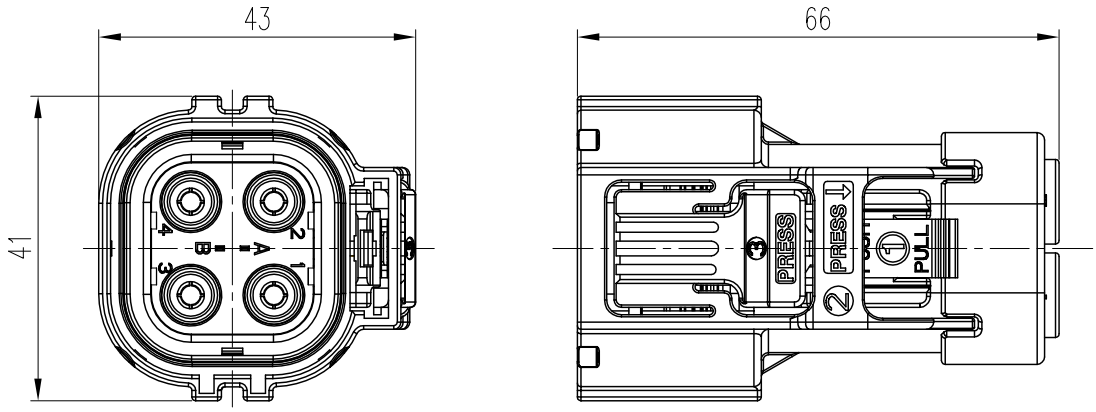

CONTACTS

All connectors do not include contacts. Please order them separately (ref: P/N below)		
CONTACTS		
HVIL contacts	4 to 6mm^2	2.5mm^2
Integrated, no need to buy.	P/N: C310026001	P/N: C310026003

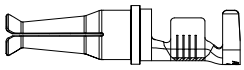

C310026001–4&6mm^2 wire
C310026003–2.5mm^2 wire

INSERT ORIENTATIONS

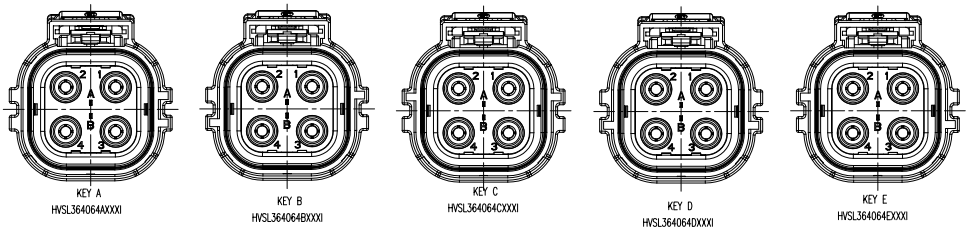

	Coding A	Coding B	Coding C	Coding D	Coding E
P/N	HVSL364 064 A	HVSL364 064 B	HVSL364 064 C	HVSL364 064 D	HVSL364 064 E

HOW TO ORDER (HVSL 364)

HOW TO ORDER: PLUG

		HVSL364	06	4	A	0	03	I
Product type:	**06:** Straight plug							
Position:	**4:** 4 position							
Coding / Alternate position:	**A:** Coding A **B:** Coding B **C:** Coding C **D:** Coding D **E:** Coding E							
Interlock:	**0:** Without interlock **1:** With interlock							
Cable size:	**03:** 2.5mm^2 **04:** 4mm^2 **06:** 6mm^2							
Wire type:	**I:** Individually shielded wire							

HOW TO ORDER: RECEPTACLE

		HVSL364	02	4	A
Product type:	**02:** Box mounted receptacle				
Position:	**4:** 4 positions				
Coding / Alternate position:	**A:** Coding A **B:** Coding B **C:** Coding C **D:** Coding D **E:** Coding E				

Excel|Mate PT (HVPT - PASS-THROUGH WITH CABLE GLAND)

MECHANICAL	
Wire range	25 to 70 mm^2 shielded wires
Connection type	Crimping
ELECTRICAL	
Rated voltage	1000V DC
Dielectric withstand voltage	3000V AC
Shielding	360° from wire to device
ENVIRONMENTAL	
Sealing	IP67, IP6K9K (mated)
Temperature range	-40°C to 125°C
MATERIAL	
Housing	PA66 + GF

KEY FEATURES

- 1 to 3 positions available
- Light in weight with plastic shell
- Easy to install, reliable connection
- Sealing, IP67 (mated), IP6K9K
- Multiple coding positions
- 360° shielded from wire to device
- Economical

1 POSITION PASS-THROUGH

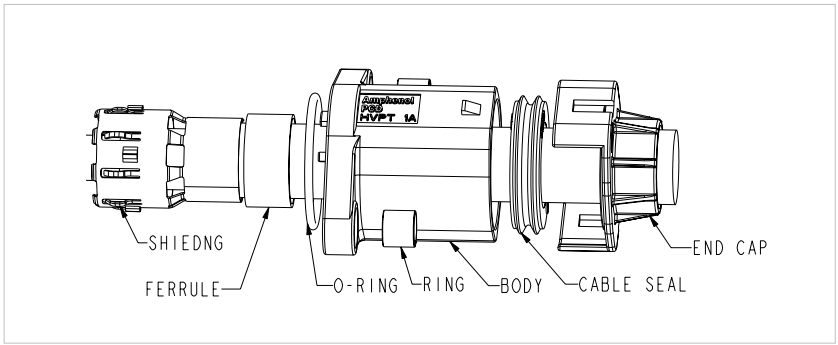

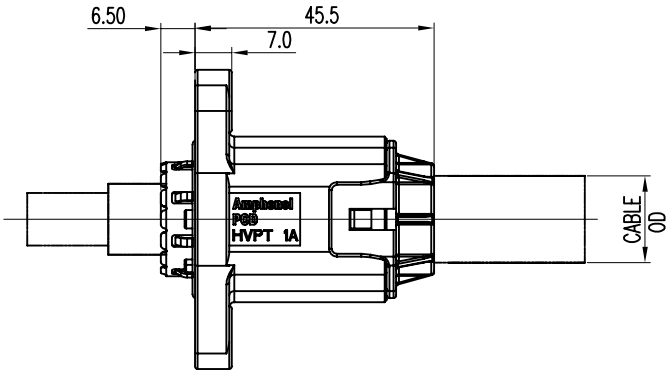

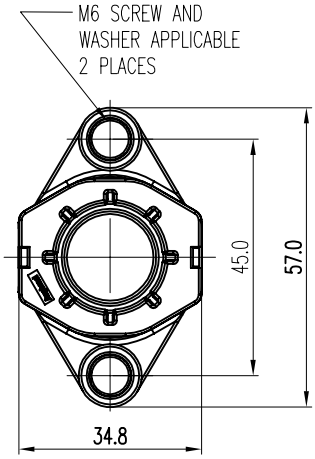

CONTACTS

Part number	Condutor cross section (mm^2)	Cable OD
HVPT 1 X 70	70	19.0±0.3
HVPT 1 X 50	50	16.5±0.3
HVPT 1 X 35	35	14.2±0.3
HVPT 1 X 25	25	11.9±0.3

INSERT ORIENTATIONS

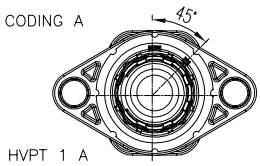

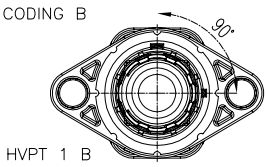

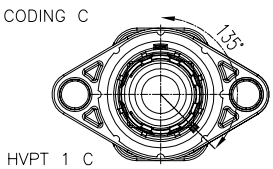

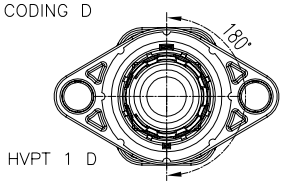

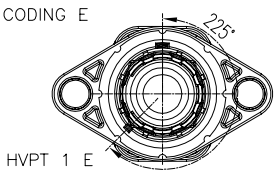

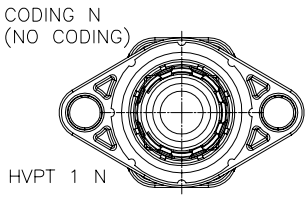

PANEL MOUNTING DIMENSIONS

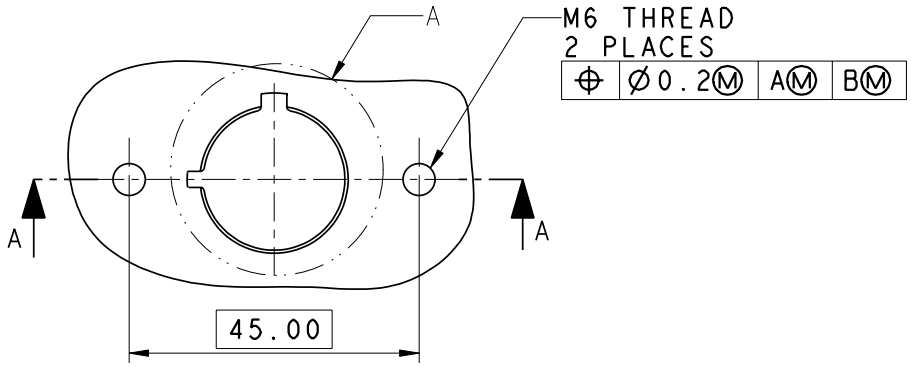

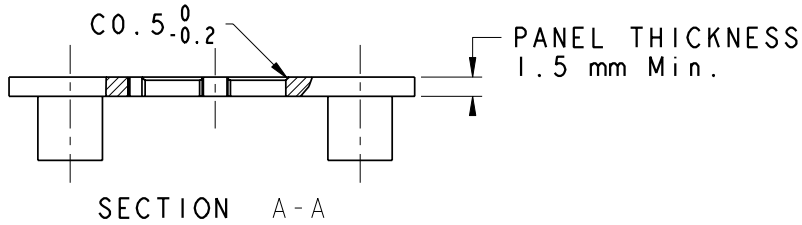

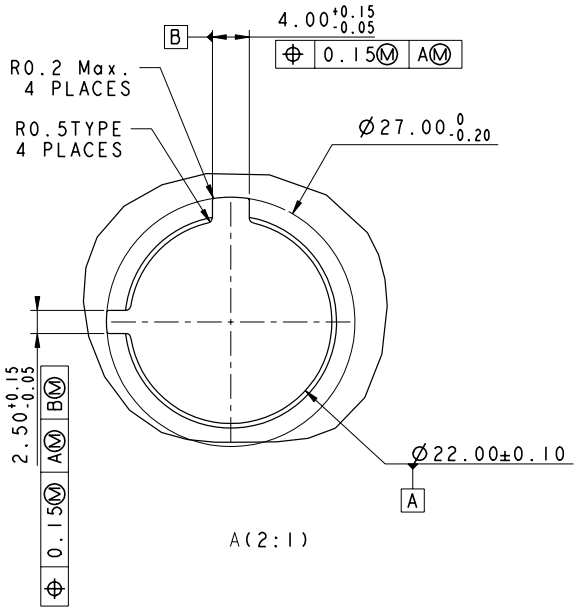

PANEL MOUNTING DIMENSIONS

CODING A

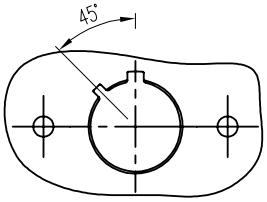

CODING B

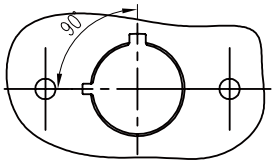

CODING C

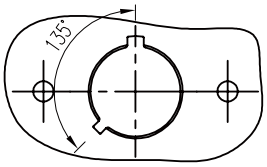

CODING D

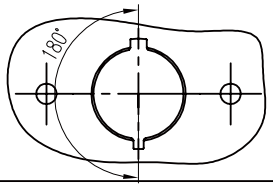

CODING E

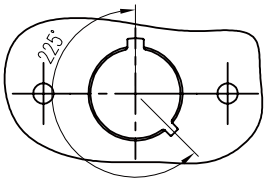

CODING N

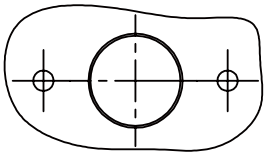

RECOMMENDED LAYOUT FOR 2 UNITS

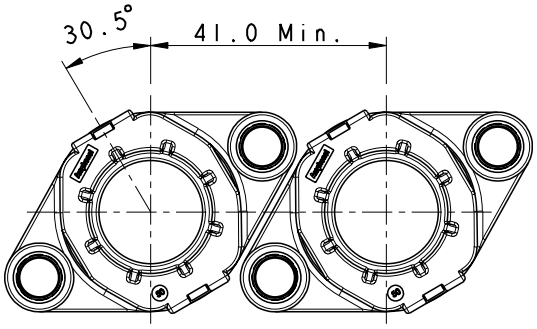

RECOMMENDED LAYOUT FOR 3 UNITS

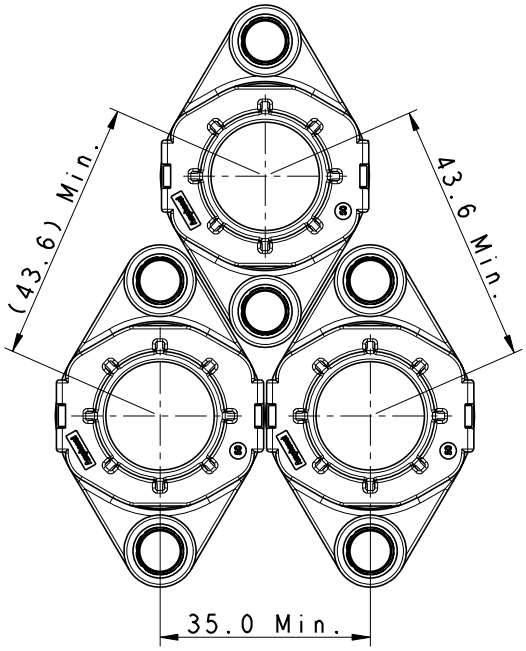

2 POSITION PASS-THROUGH

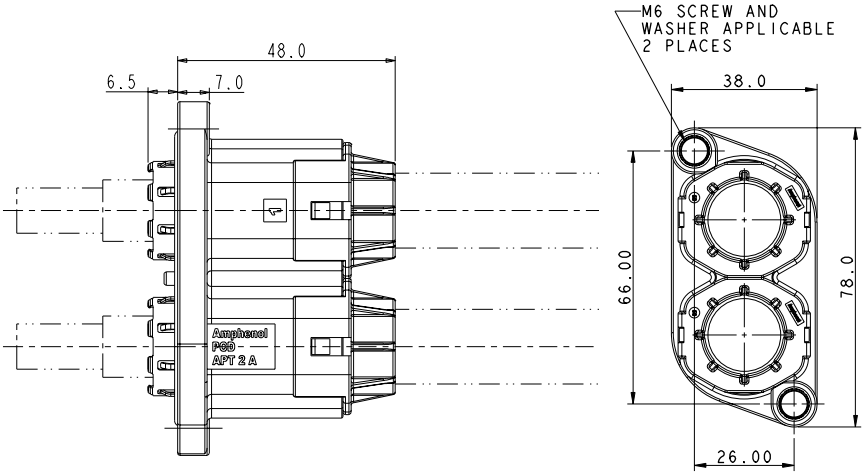

CONTACTS

Part number	Condutor cross section (mm^2)	Cable OD
HVPT 2 X 70	70	19.0±0.3
HVPT 2 X 50	50	16.5±0.3
HVPT 2 X 35	35	14.2±0.3
HVPT 2 X 25	25	11.9±0.3

INSERT ORIENTATIONS

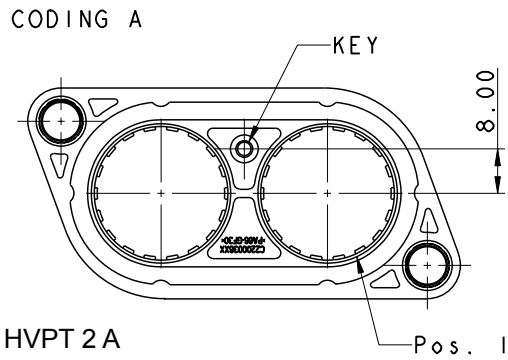

PANEL MOUNTING DIMENSIONS

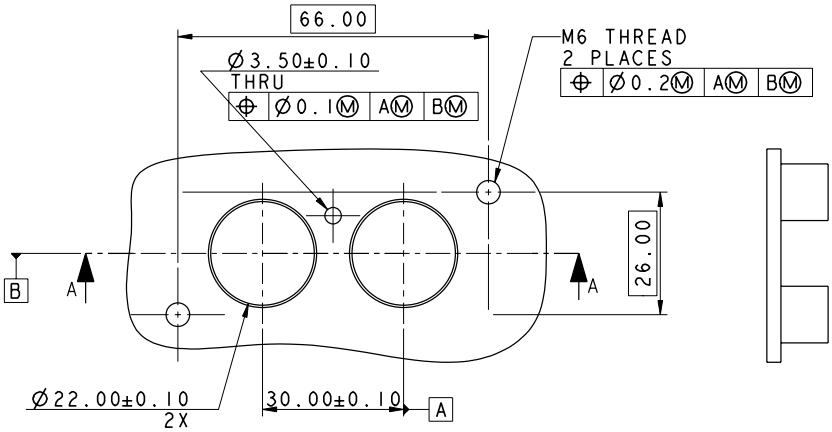

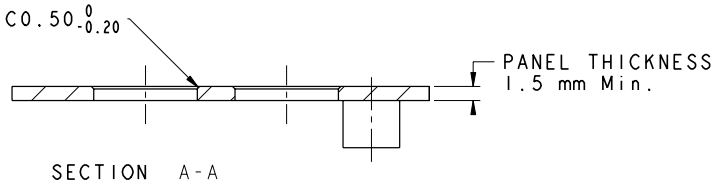

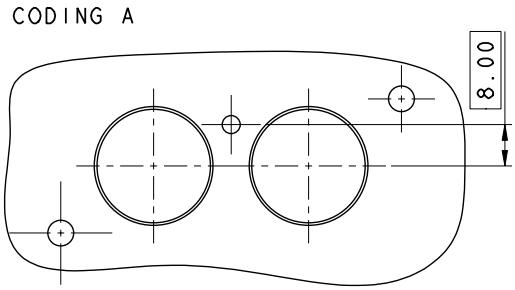

3 POSITION PASS-THROUGH

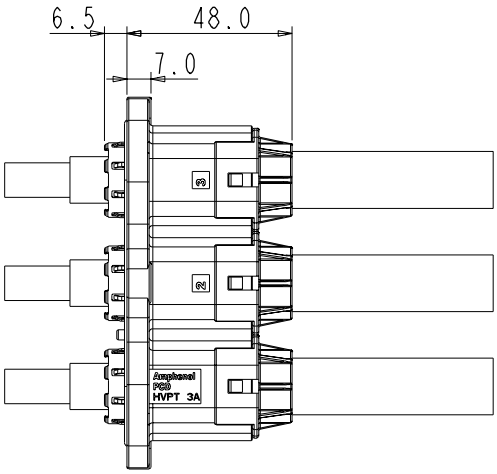

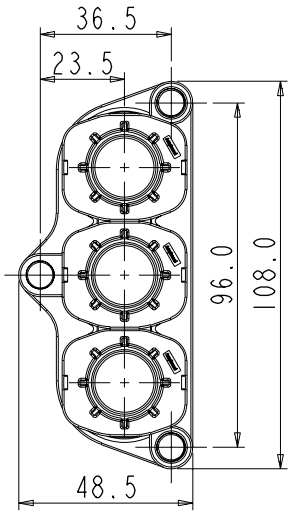

CONTACTS

Part number	Conductor cross section (mm^2)	Cable OD
HVPT 3 X 70	70	19.0±0.3
HVPT 3 X 50	50	16.5±0.3
HVPT 3 X 35	35	14.2±0.3
HVPT 3 X 25	25	11.9±0.3

INSERT ORIENTATIONS

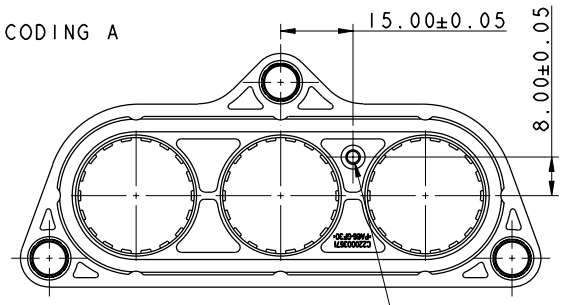

HVPT 3 A

PANEL MOUNTING DIMENSIONS

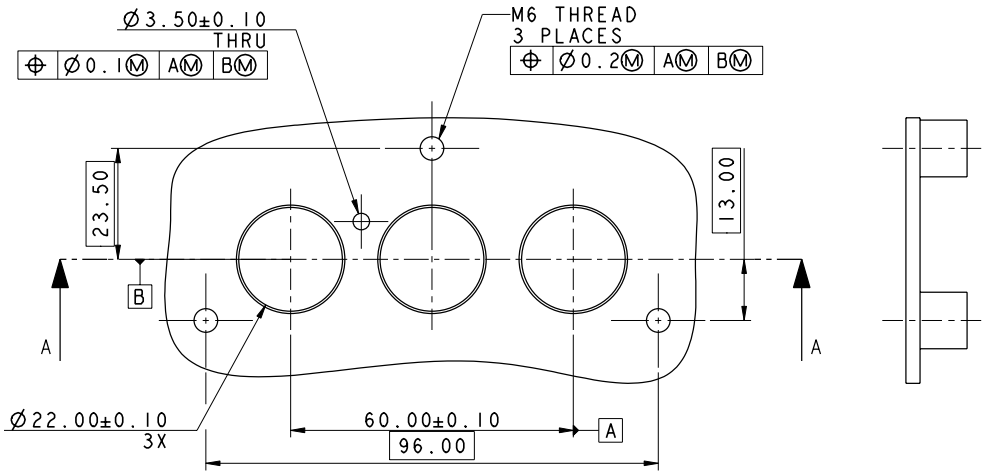

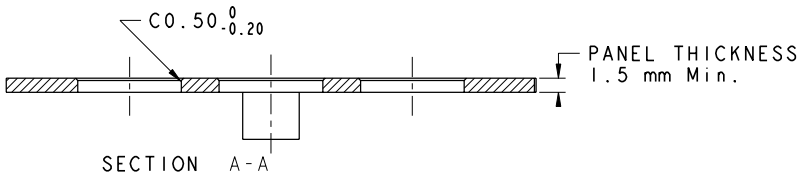

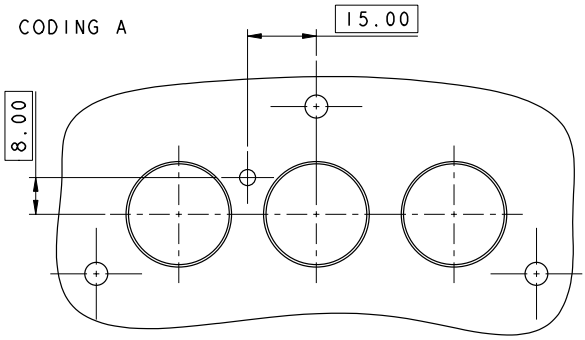

HVPT B PASS-THROUGH

MECHANICAL	
Wire range	25 to 70 mm^2 shielded wires
Connection type	Crimping
ELECTRICAL	
Rated voltage	1000V DC
Dielectric withstand voltage	3000V AC
Shielding	360° from wire to device
ENVIRONMENTAL	
Sealing	IP67, IP6K9K (mated)
Temperature range	-40°C to 125°C
MATERIAL	
Housing	PA66 + GF

KEY FEATURES

- 2 & 3 positions available
- Light in weight with plastic shell
- Easy to install, reliable connection
- Sealing, IP67 (mated), IP6K9K
- Multiple coding positions
- 360° shielded from wire to device
- Economical

HVPTB 2 POSITION PASS-THROUGH

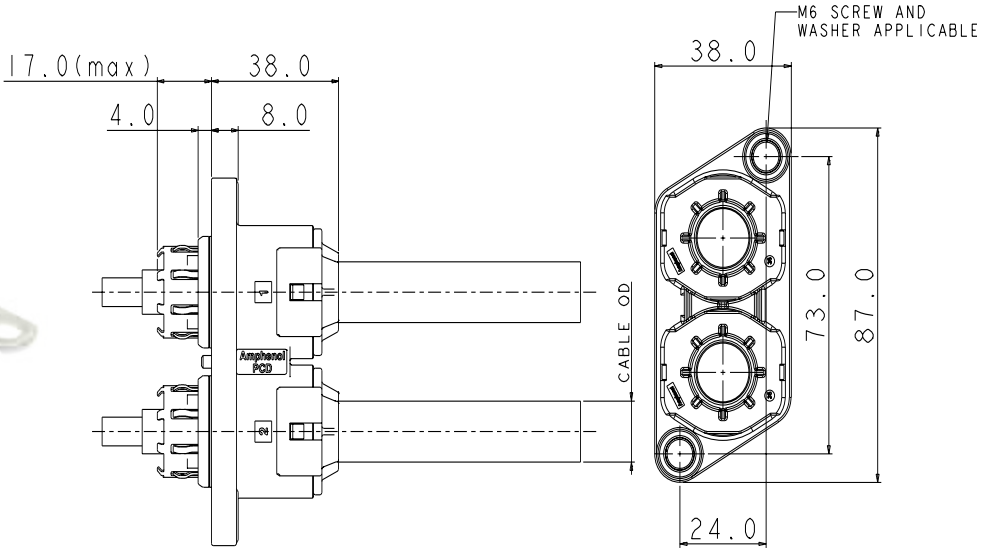

PART NUMBER

Part number	Condutor cross section (mm^2)	Cable OD
HVPTB 2 B 70	70	19.0±0.3
HVPTB 2 B 50	50	16.5±0.3
HVPTB 2 B 35	35	14.2±0.3
HVPTB 2 B 25	25	11.9±0.3

PANEL MOUNTING DIMENSIONS

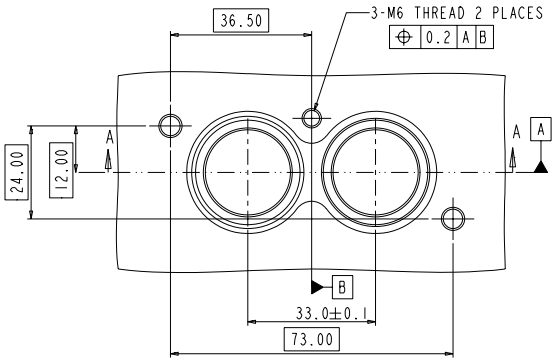

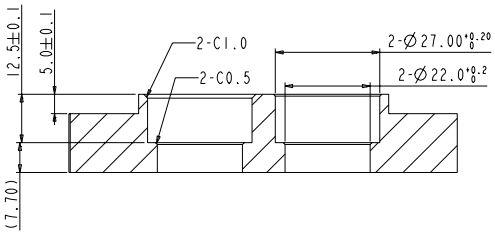

HVPTB 3 POSITION PASS-THROUGH

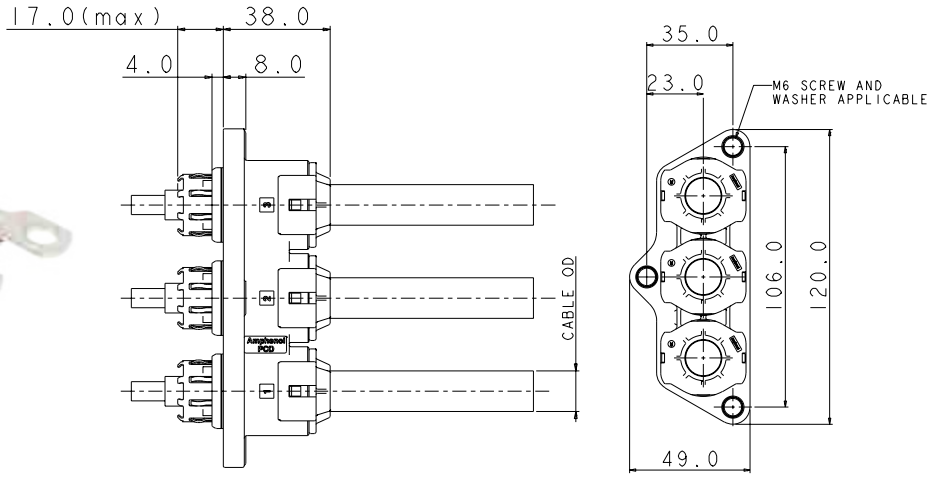

PART NUMBER

Part number	Conductor cross section (mm^2)	Cable OD
HVPTB 3 N 70	70	19.0±0.3
HVPTB 3 N 50	50	16.5±0.3
HVPTB 3 N 35	35	14.2±0.3
HVPTB 3 N 25	25	11.9±0.3

PANEL MOUNTING DIMENSIONS

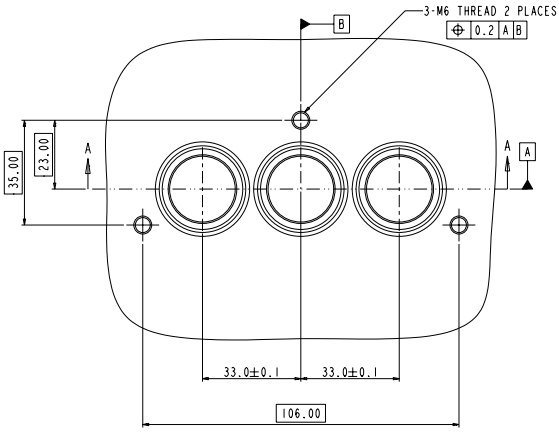

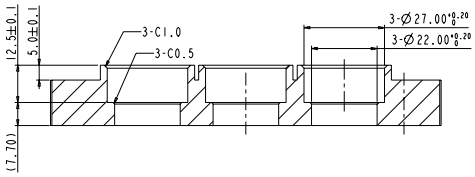

HVPTB 2A POSITION PASS-THROUGH

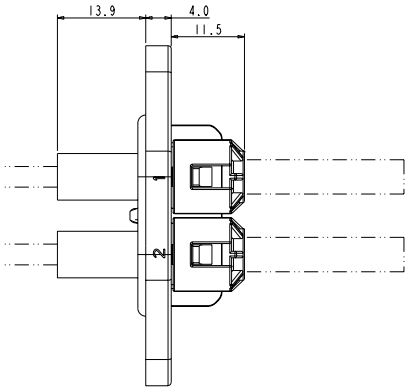

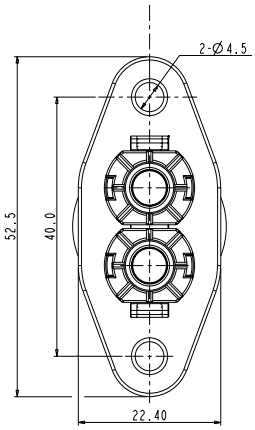

PART NUMBER

Part number	Conductor cross section (mm^2)	Cable OD (mm)
HVPTB 2 A 03	2.5 / 3.0	5.2 ± 0.2

PANEL MOUNTING DIMENSIONS

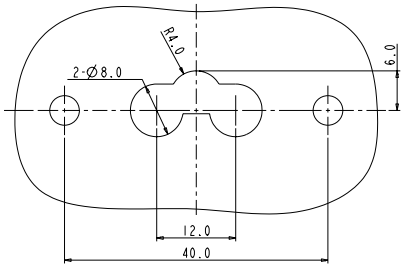

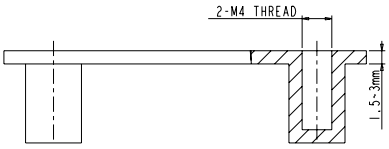

HVPC PASS-THROUGH

MECHANICAL	
Wire range	35 to 50mm^2 shielded wires
Connection type	Crimping
ELECTRICAL	
Rated voltage	1000V DC
Dielectric withstand voltage	3000V AC
Shielding	360° from wire to device
ENVIRONMENTAL	
Sealing	IP67, IP6K9K (mated)
Temperature range	-40°C to 125°C
Salt spray	96 hours
MATERIAL	
Housing	Metal

KEY FEATURES

- Easy to install, reliable connection
- Sealing, IP67 (mated), IP6K9K
- Multiple coding positions
- 360° shielded from wire to device
- Economical

HVPC 1 POSITION PASS-THROUGH

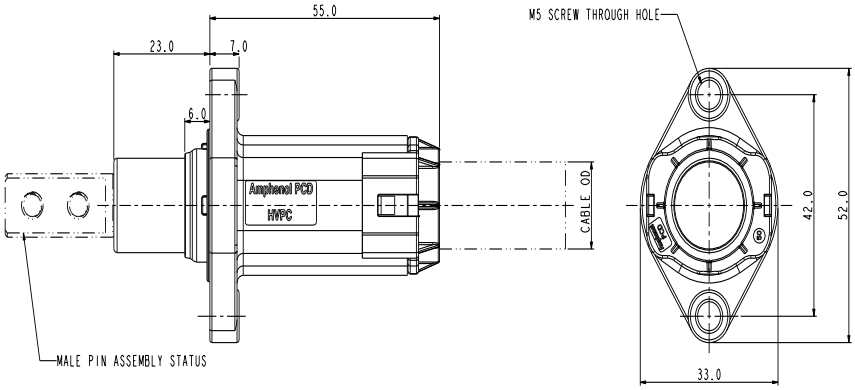

HVPC 1 POSITION RIGHT-ANGLE

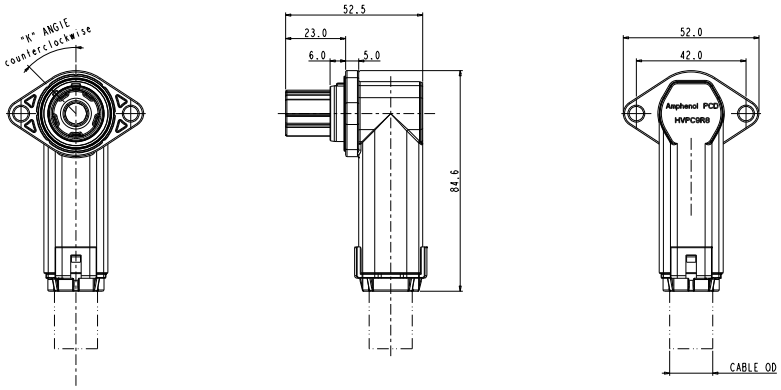

PANEL MOUNTING DIMENSIONS

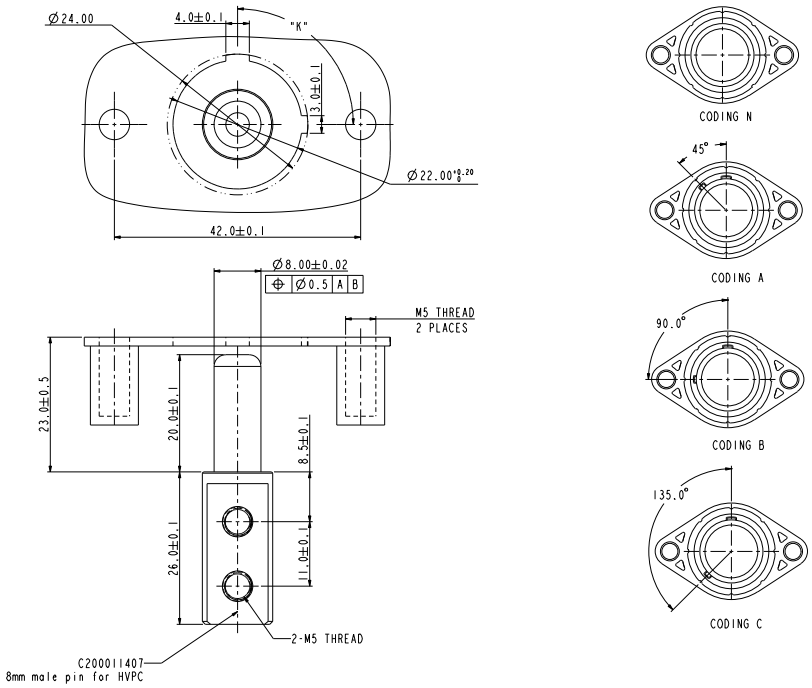

PANEL DRAWING

HOW TO ORDER

HVPC	7	R8	1	A	35

Product type:
- **7:** Straight
- **9:** Right angle

Insert size:
- **R8:** 8mm pin contact

Position:
- **1:** 1 position

Coding:
- **A:** Coding A
- **B:** Coding B
- **C:** Coding C
- **D:** Coding D (Right-Angle only)
- **E:** Coding E (Right-Angle only)
- **N:** Coding N (Straight only)

Wire type:
- **35:** 35mm^2 shielded wire
- **50:** 50mm^2 shielded wire

Excel|Mate PT (HVPC 800)

HVPC 800

MECHANICAL	
Wire range	35 to 50mm^2 shielded wires
Connection type	Crimping
ELECTRICAL	
Rated voltage	1000V DC
Dielectric withstand voltage	3000V AC
Shielding	360° from wire to device
ENVIRONMENTAL	
Sealing	IP67, IP6K9K (mated)
Temperature range	-40°C to 125°C
Salt spray	96 hours
MATERIAL	
Housing	Metal

KEY FEATURES

- Easy to install, reliable connection
- Sealing, IP67 (mated), IP6K9K
- Multiple coding positions
- 360° shielded from wire to device
- Economical

HVPC 800 PLUG

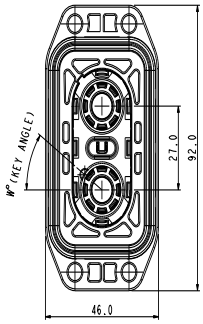

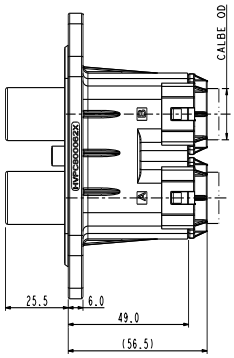

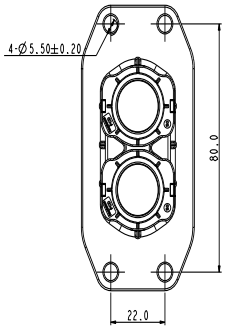

HVPC 800 RECEPTACLE

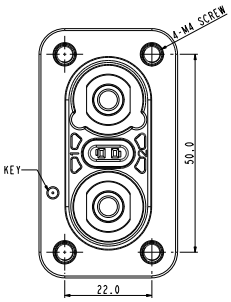

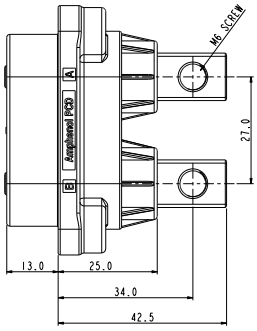

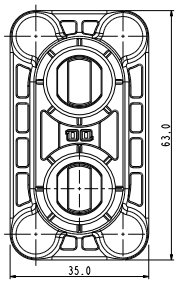

PANEL MOUNTING DIMENSIONS

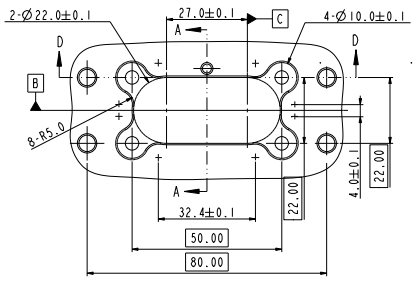

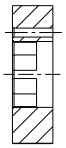

断面 A-A

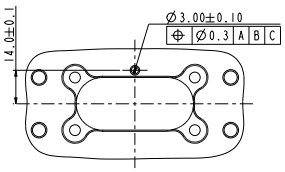

CODING A

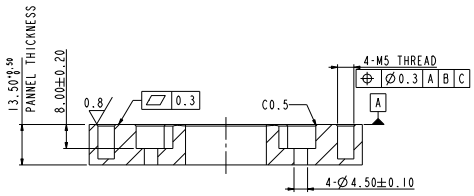

断面 D-D

PANNEL DRAWING

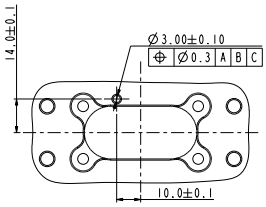

CODING B

HOW TO ORDER (HVPC 800)

HOW TO ORDER

HVPC 800	02	2	A	1	35

Product type:
- **02:** Receptacle
- **06:** Plug

Position:
- **2:** 2 positions

Coding:
- **A:** Coding A
- **B:** Coding B

HVIL:
- **0:** Without HVIL
- **1:** With HVIL

Wire type:
- **35:** 35mm^2 shielded wire
- **50:** 50mm^2 shielded wire

Amphenol PCD Shenzhen

Building 21
1st Liao Keng Industrial Zone
Shi Yan Street, Bao An District Shenzhen 518108
China

Tel.: +86 755-8173-8000
Fax: +86 755-8173-8180
Email: inquiry@amphenolpcd.com.cn

www.amphenolpcd.com.cn

Notes:

Amphenol PCD Shenzhen has made every effort to ensure that the information contained in this catalog is accurate at the time of publication. Specifications or information stated in this publication are subject to change without notice.

Amphenol PCD Shenzhen reserves the right to clarify this catalog.