AMPHENOL PCD SHENZHEN

EXCEL | MATE

High Voltage Safety Lock

www.amphenolpcd.com.cn

INDUSTRIAL@AMPHENOL TRUSTED GLOBALLY

Excel|Mate PT (HVPT)

Excel|Mate PT (HVPT - PASS-THROUGH WITH CABLE GLAND)

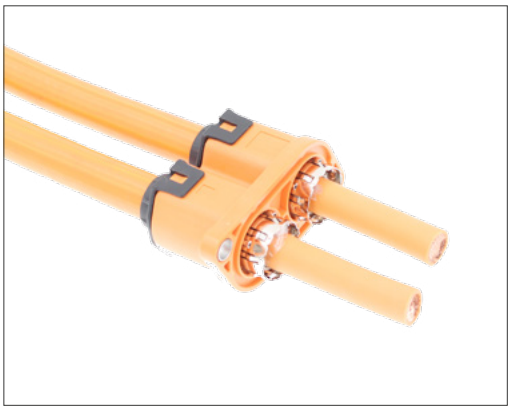

MECHANICAL	
Wire range	25 to 70 mm^2 shielded wires
Connection type	Crimping
ELECTRICAL	
Rated voltage	1000V DC
Dielectric withstand voltage	3000V AC
Shielding	360° from wire to device
ENVIRONMENTAL	
Sealing	IP67, IP6K9K (mated)
Temperature range	-40°C to 125°C
MATERIAL	
Housing	PA66 + GF

KEY FEATURES

- 1 to 3 positions available
- Light in weight with plastic shell
- Easy to install, reliable connection
- Sealing, IP67 (mated), IP6K9K
- Multiple coding positions
- 360° shielded from wire to device
- Economical

1 POSITION PASS-THROUGH

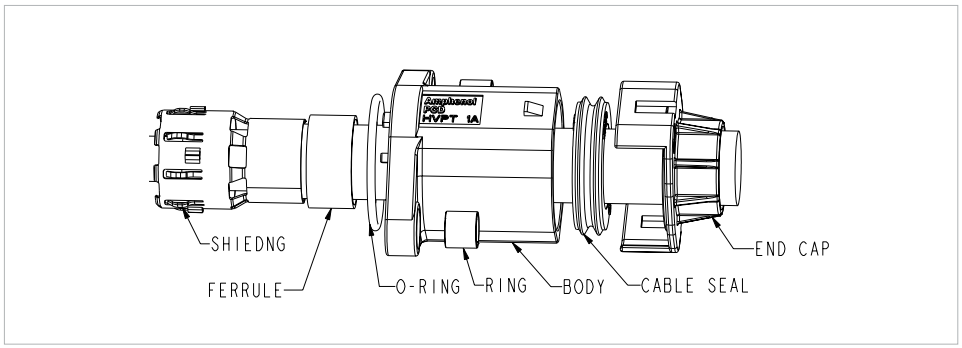

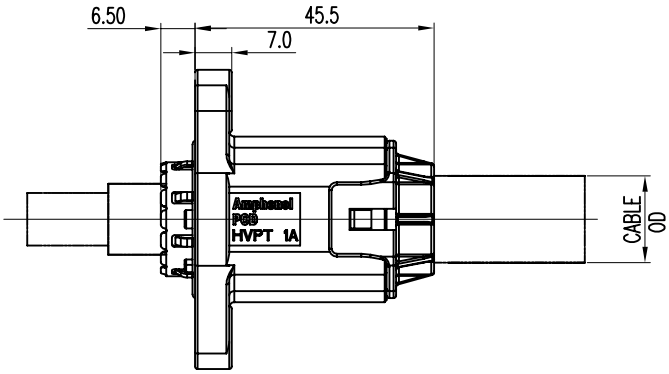

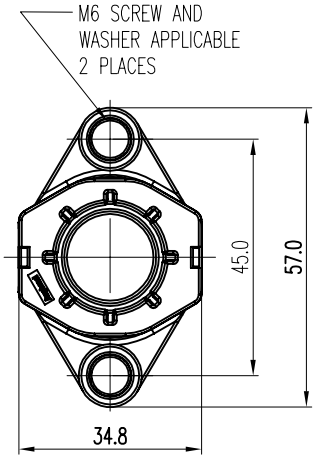

CONTACTS

Part number	Condutor cross section (mm^2)	Cable OD
HVPT 1 X 70	70	19.0±0.3
HVPT 1 X 50	50	16.5±0.3
HVPT 1 X 35	35	14.2±0.3
HVPT 1 X 25	25	11.9±0.3

INSERT ORIENTATIONS

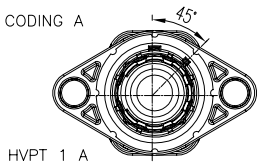

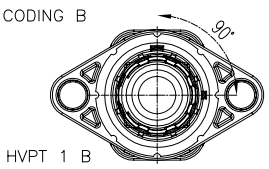

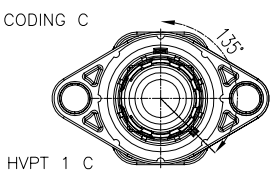

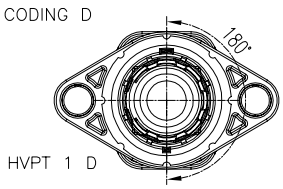

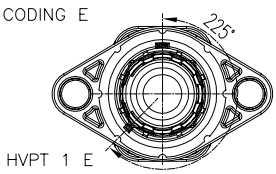

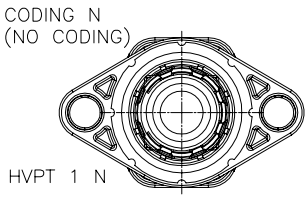

PANEL MOUNTING DIMENSIONS

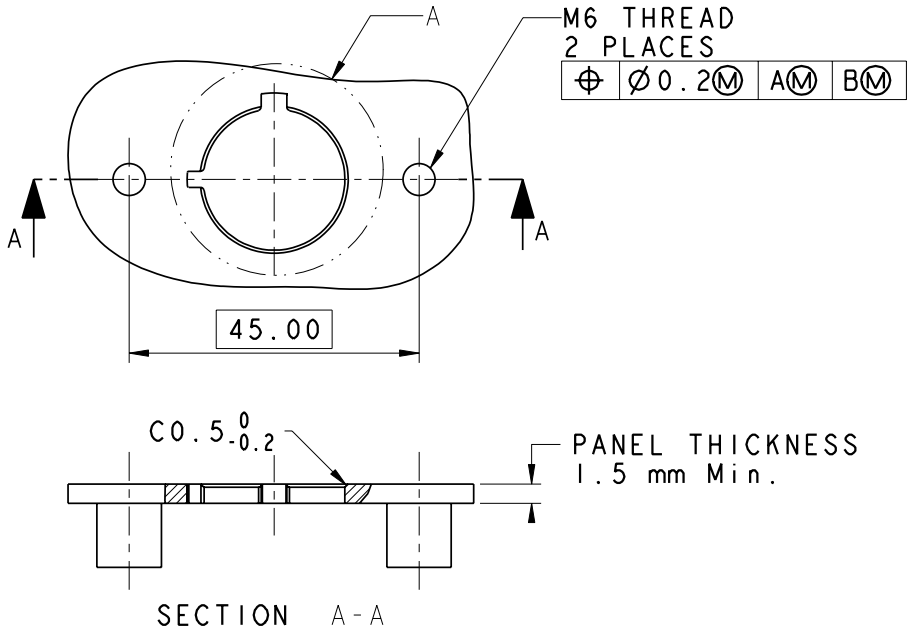

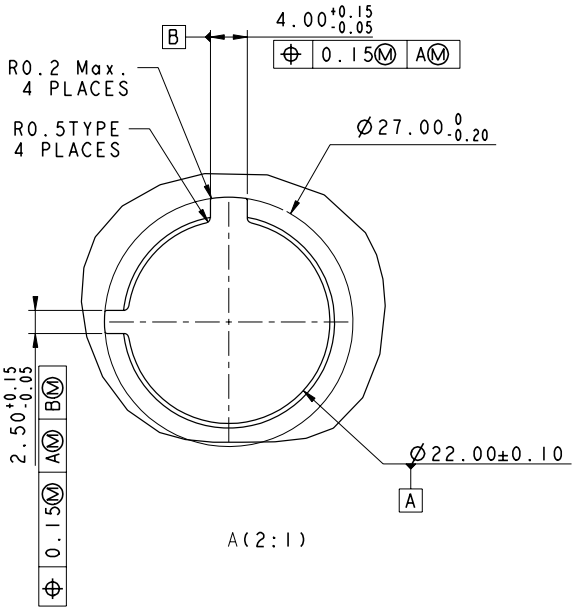

PANEL MOUNTING DIMENSIONS

CODING A

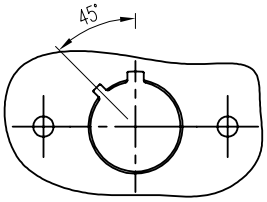

CODING B

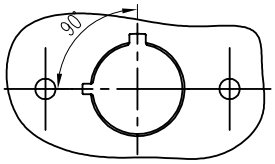

CODING C

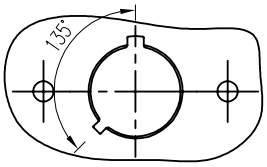

CODING D

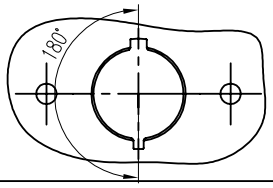

CODING E

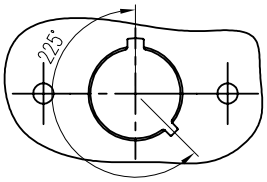

CODING N

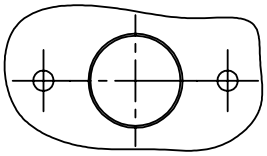

RECOMMENDED LAYOUT FOR 2 UNITS

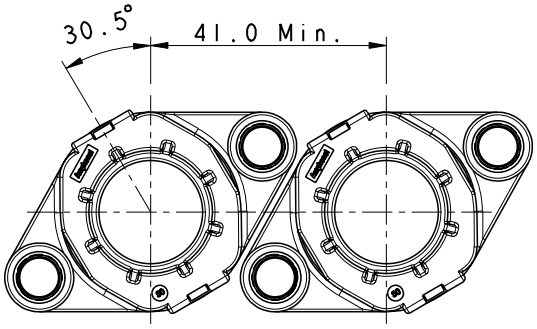

RECOMMENDED LAYOUT FOR 3 UNITS

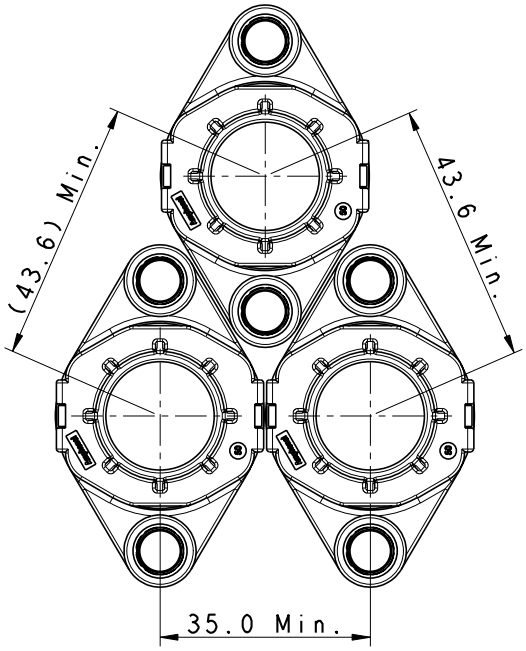

2 POSITION PASS-THROUGH

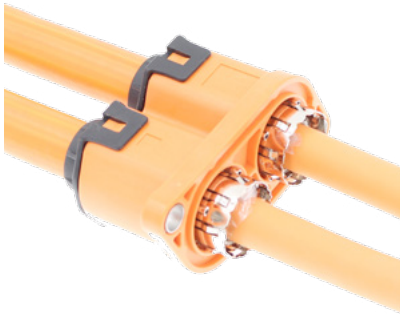

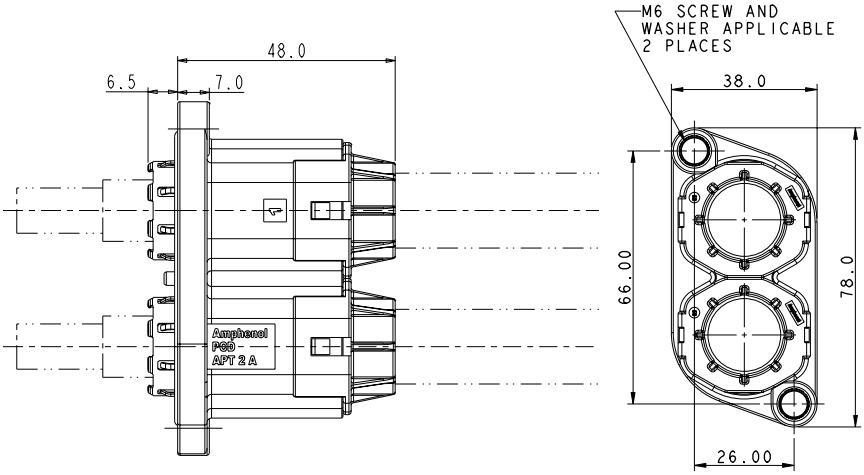

CONTACTS

Part number	Condutor cross section (mm^2)	Cable OD
HVPT 2 X 70	70	19.0±0.3
HVPT 2 X 50	50	16.5±0.3
HVPT 2 X 35	35	14.2±0.3
HVPT 2 X 25	25	11.9±0.3

INSERT ORIENTATIONS

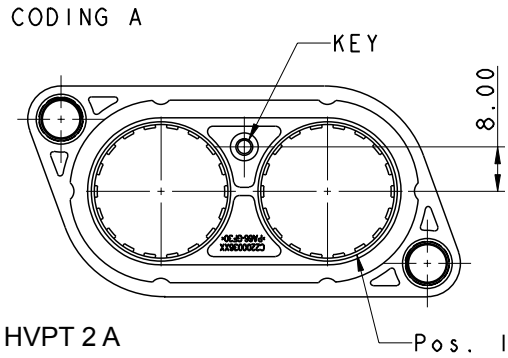

HVPT 2 A

PANEL MOUNTING DIMENSIONS

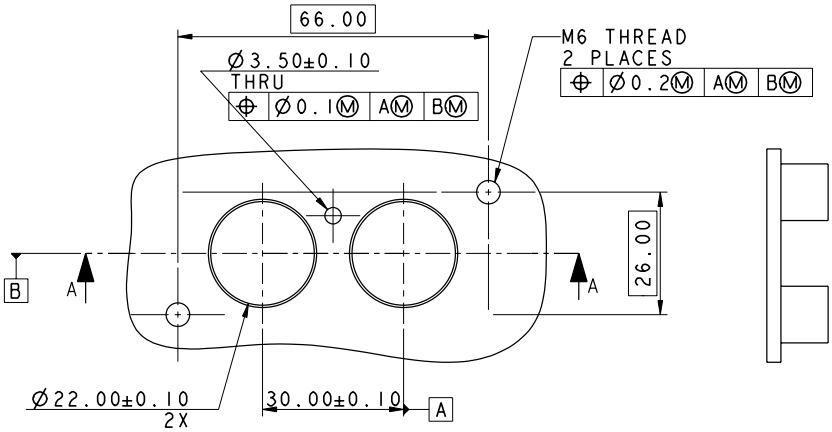

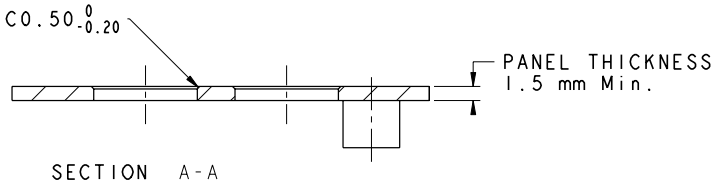

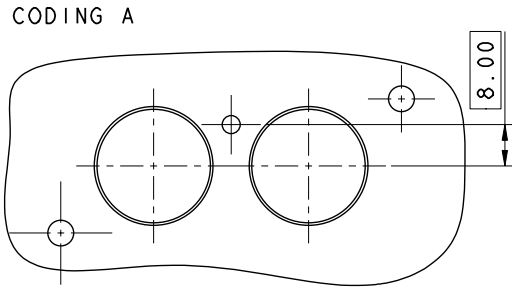

3 POSITION PASS-THROUGH

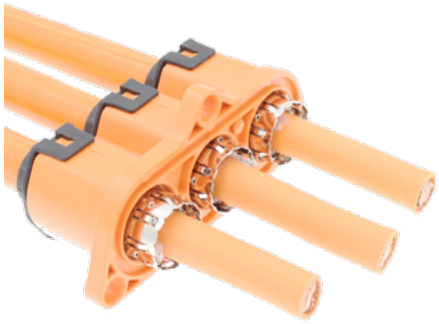

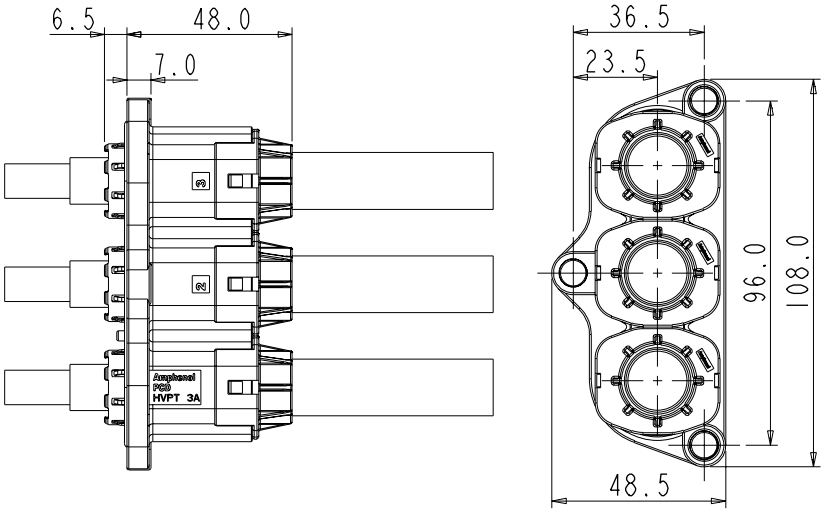

CONTACTS

Part number	Conductor cross section (mm^2)	Cable OD
HVPT 3 X 70	70	19.0±0.3
HVPT 3 X 50	50	16.5±0.3
HVPT 3 X 35	35	14.2±0.3
HVPT 3 X 25	25	11.9±0.3

INSERT ORIENTATIONS

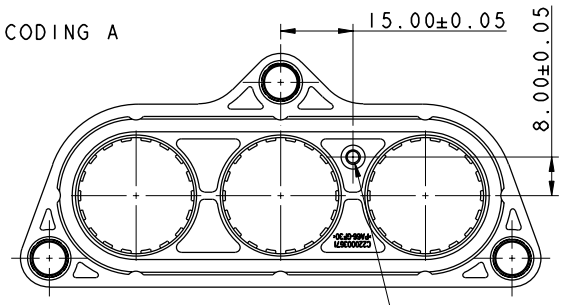

HVPT 3 A

PANEL MOUNTING DIMENSIONS

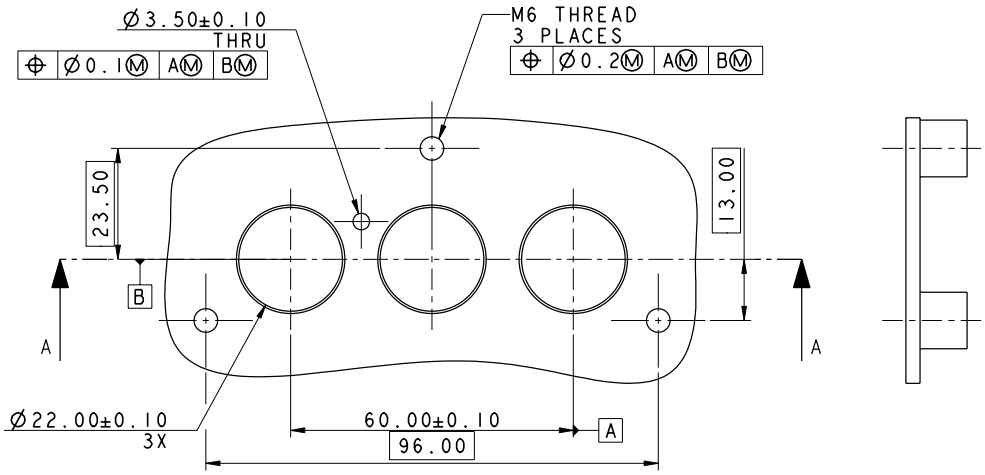

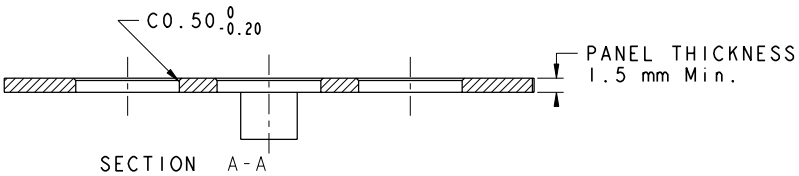

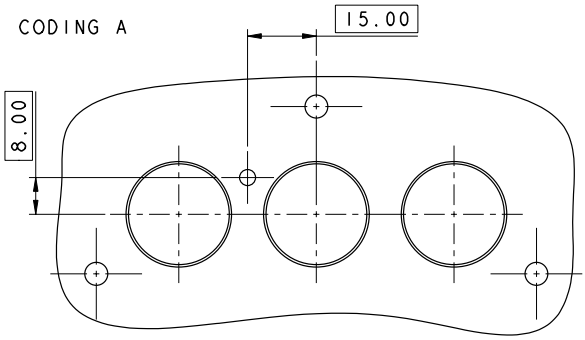

Amphenol PCD Shenzhen

Building 21
1st Liao Keng Industrial Zone
Shi Yan Street, Bao An District Shenzhen 518108
China

Tel.: +86 755-8173-8000
Fax: +86 755-8173-8180
Email: inquiry@amphenolpcd.com.cn

www.amphenolpcd.com.cn

Notes:

Amphenol PCD Shenzhen has made every effort to ensure that the information contained in this catalog is accurate at the time of publication. Specifications or information stated in this publication are subject to change without notice.

Amphenol PCD Shenzhen reserves the right to clarify this catalog.