KEY FEATURES:

Compliant with:
IEC 62196-2
IEC 62196-3

| MECHANICAL | |
|---|---|
| Mating cycles | > 10,000 cycles (unloaded) |
| Insertion / withdrawal force | < 100N |
| ELECTRICAL | |
| Rated current | *See page 20 and 22* |
| Rated voltage | *See page 20 and 22* |
| Contact resistance | 0.5MΩ Max (AC)<br>0.35MΩ Max (DC) |
| Insulation resistance | > 100MΩ |
| Temperature sensor (Optional) | The two power contacts DC+ and DC- are monitored by temperature-dependent resistor sensors |
| ENVIRONMENTAL | |
| Protection degree | IP44 (mated) |
| Ambient temperature | -30°C to 50°C |
| MATERIAL | |
| Shell | Nylon |
| Contact | Copper alloy, silver or nickel plating |
| Inserts | Thermoplastic |
| Sealing gasket | Rubber or silicon rubber |
| Insulator inflammability | UL94V0 |

## Rear mount without protection cap

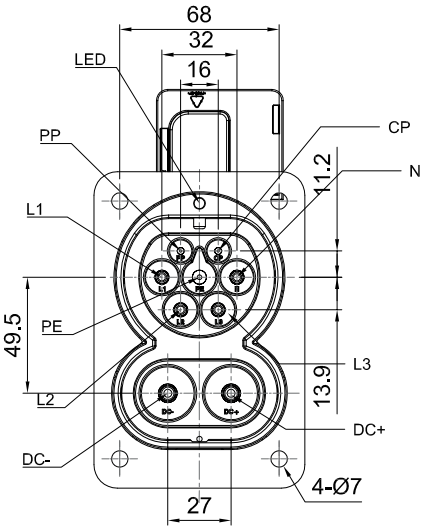


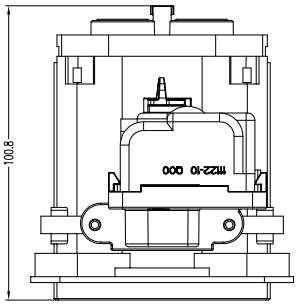


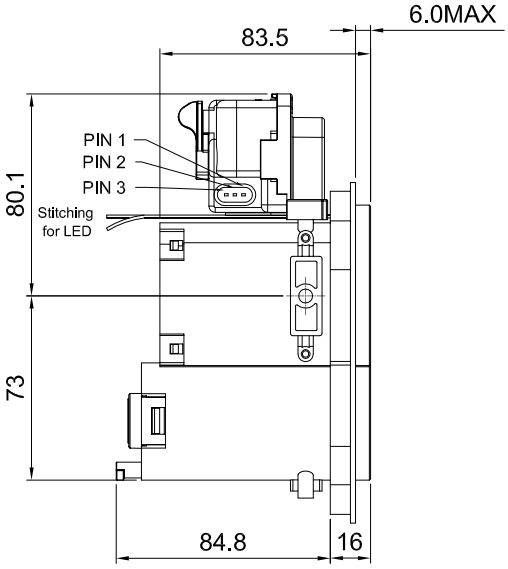


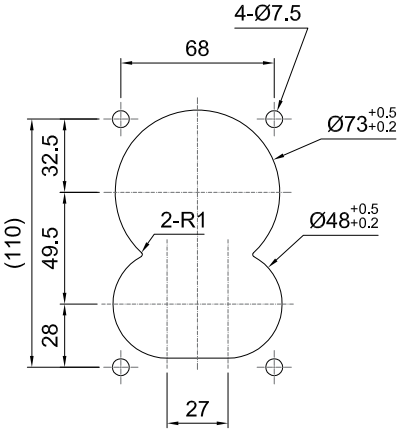


Hole position of mounting plate

## Rear mount with protection cap

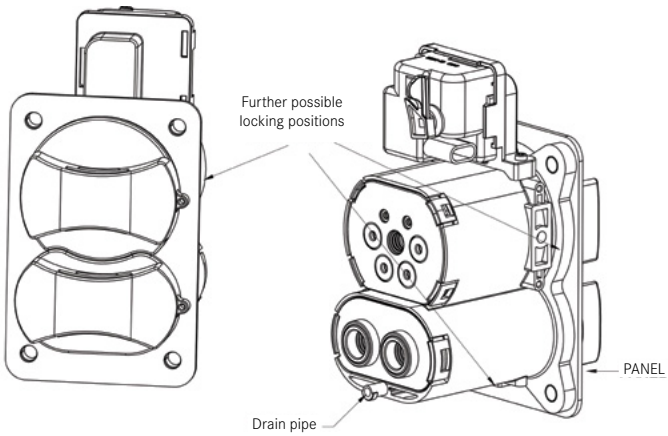

## Electronic lock | HELLA (12V)

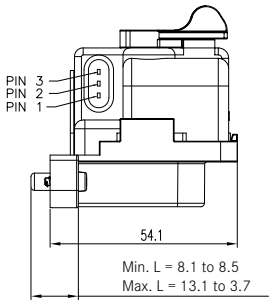


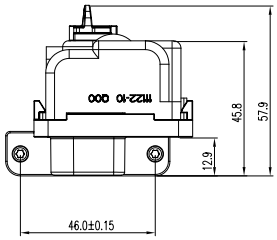


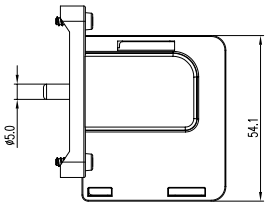


P/N: HVCOCBELOCKH

| E-LOCK | PIN 3 | PIN 1 | PIN 2 SIGNAL |
|---|---|---|---|
| UNLOCKING | +12V DC | - | |
| LOCKING | - | +12V DC | SIGNAL |

12 o'clock

9 o'clock

6 o'clock

3 o'clock

## Electronic lock | AMPHENOL PCD SHENZHEN (12V, 24V)

4 wire solution is available for both 12V and 24V.

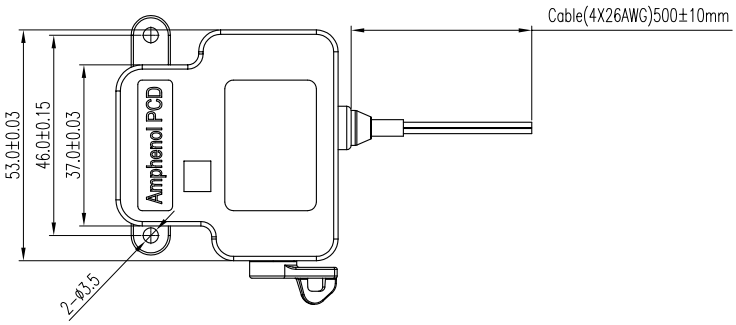


| TYPE | RED | BLACK | WHITE | BLUE |
|---|---|---|---|---|
| UNLOCKING | + | - | / | |
| LOCKING | - | + | SIGNAL | |

P/N (12V): HVCODC12VELOCK

P/N (24V): HVCODC24VELOCK

12 o'clock

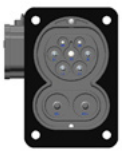

9 o'clock

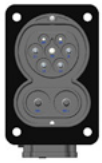

6 o'clock

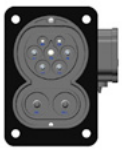

3 o'clock

## IEC COMBO VEHICLE CONNECTOR DIMENSIONS

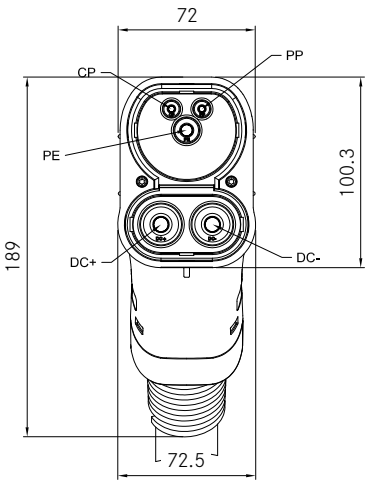


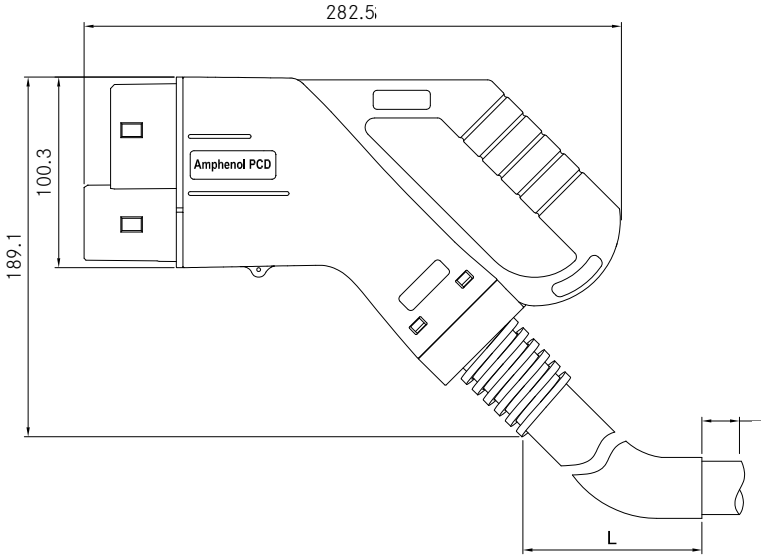


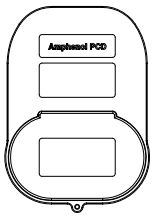


CAP

70±10(Stripping distance)

## IEC COMBO ELECTRICAL SPECIFICATIONS

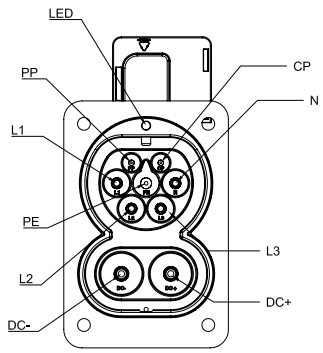


| Combined interface | | Functions |
|---|---|---|
| 1-phase | 3-phase | |
| 250V \| 32A | 480V \| 32A, 63A | L1 (Mains 1) - Optional |
| - | 480V \| 32A, 63A | L2 (Mains 2) - Optional |
| - | 480V \| 32A, 63A | L3 (Mains 3) - Optional |
| 250V \| 32A | 480V \| 32A, 63A | N (Neutral) - Optional |
| Rated for fault | | PE (Protective Ground/Earth) |
| 30V \| 2A | | CP (Control pilot) |
| 30V \| 2A | | PP (Proximity) |
| 1000V \| 60A, 125A, 200A | | DC+ (High power d.c.) |
| 1000V \| 60A, 125A, 200A | | DC- (High power d.c.) |

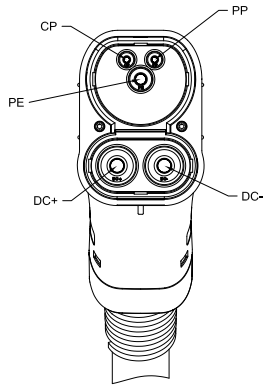


| Combined interface | Functions |
|---|---|
| Rated for fault | PE (Protective Ground/Earth) |
| 30V \| 2A | CP (Control pilot) |
| 30V \| 2A | PP (Proximity) |
| 1000V \| 60A, 125A, 200A | DC+ (High power d.c.) |
| 1000V \| 60A, 125A, 200A | DC- (High power d.c.) |

## CIRCUIT DIAGRAMS

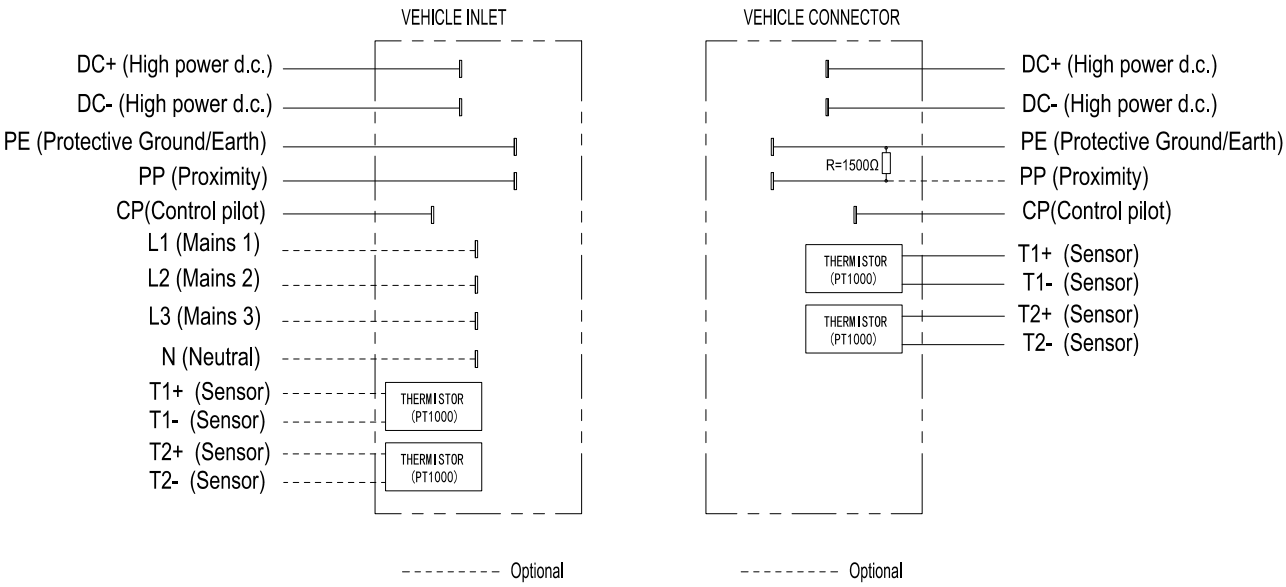

IEC Combo 60A & 125A can be equipped with either NTC or PT1000 temperature sensor.

| Temperature sensors: NTC or PT1000 | |
|---|---|
| 60A, 125A | 200A |
| T: NTC | T: PT1000 |
| PT: PT1000 | - |

| HVCO | C | M | X | A | T | R8 | SFXXX | LXXXX | XXXX |
|---|---|---|---|---|---|---|---|---|---|

**C:** IEC Combo

**Connector type:**
**M:** Vehicle connector
**F:** Vehicle inlet

**Power cable size:**
**X:** AC + DC (refer to next page)

**Protection cap:**
**A:** Protection cap (only for receptacle)

**Temperature sensor:**
**T:** NTC temperature sensor
**PT:** PT1000 temperature sensor
**Omit:** No temperature sensor needed

**Contact size:**
**R8:** 8mm Radsok (for vehicle connector) or 8mm pin contact (for vehicle inlet)

**Type of connector and insert arrangements:**
**PFXXX:** 32A cable side (Vehicle connector Fast)
**SFXXX:** 32A cable side (Vehicle inlet Fast)

**Cable length:**
**LXXXX:** Cable length (Unit in mm)
**Omit:** No cable needed

**Cable accessories:**
**XXXX:** Cable accessories or customer code

## Vehicle inlet

The temperature sensor is optional for the vehicle inlet.

T: NTC (optional)

| Part Number (without cable) | | |
|---|---|---|
| Only DC | DC 60A | HVCOCFATR8SF516L0000 |
| | DC 125A | HVCOCFATR8SF550L0000 |
| 1-phase | AC 32A + DC 60A | HVCOCF6ATR8SF716L0000 |
| | AC 32A + DC 125A | HVCOCF6ATR8SF750L0000 |
| 3-phase | AC 32A + DC 60A | HVCOCF6ATR8SF916L0000 |
| | AC 32A + DC 125A | HVCOCF6ATR8SF950L0000 |
| | AC 63A + DC 60A | HVCOCF10ATR8SF916L0000 |
| | AC 63A + DC 125A | HVCOCF10ATR8SF950L0000 |

PT: PT1000 (optional)

| Part Number (without cable) | | |
|---|---|---|
| Only DC | DC 60A | HVCOCFAPTR8SF516L0000 |
| | DC 125A | HVCOCFAPTR8SF550L0000 |
| 1-phase | AC 32A + DC 60A | HVCOCF6APTR8SF716L0000 |
| | AC 32A + DC 125A | HVCOCF6APTR8SF750L0000 |
| 3-phase | AC 32A + DC 60A | HVCOCF6APTR8SF916L0000 |
| | AC 32A + DC 125A | HVCOCF6APTR8SF950L0000 |
| | AC 63A + DC 60A | HVCOCF10APTR8SF916L0000 |
| | AC 63A + DC 125A | HVCOCF10APTR8SF950L0000 |

## Vehicle connector

T: NTC

| Part Number (without cable) | | |
|---|---|---|
| - | DC 60A | HVCOCMTR8PF516L0000 |
| | DC 125A | HVCOCMTR8PF550L0000 |

PT: PT1000

| Part Number (without cable) | | |
|---|---|---|
| - | DC 60A | HVCOCMPTR8PF516L0000 |
| | DC 125A | HVCOCMPTR8PF550L0000 |

IEC Combo 200A can only be equipped with PT1000 temperature sensor.
Consequently, in this case T stands for PT1000 temperature sensor.

| Temperature sensors: NTC or PT1000 | |
|---|---|
| 60A, 125A | 200A |
| T: NTC | T: PT1000 |
| PT: PT1000 | - |

| HVCO | C | M | X | A | T | R8 | SFXXX | LXXXX | XXXX |
|---|---|---|---|---|---|---|---|---|---|

**C:** IEC Combo

**Connector type:**
**M:** Vehicle connector
**F:** Vehicle inlet

**Power cable size:**
**X:** AC + DC (refer to next page)

**Protection cap:**
**A:** Protection cap (only for receptacle)

**Temperature sensor:**
**T:** PT1000 temperature sensor
**Omit:** No temperature sensor needed

**Contact size:**
**R8:** 8mm Radsok (for vehicle connector) or 8mm pin contact (for vehicle inlet)

**Type of connector and insert arrangements:**
**PFXXX:** 32A cable side (Vehicle connector Fast)
**SFXXX:** 32A cable side (Vehicle inlet Fast)

**Cable length:**
**LXXXX:** Cable length (Unit in mm)
**Omit:** No cable needed

**Cable accessories:**
**XXXX:** Cable accessories or customer code