Omega

Omega Catalog

cinch
CONNECTIVITY SOLUTIONS
a bel group

belfuse.com/cinch

Downloaded from Arrow.com.

About Bel

Bel is a publicly traded company that has been operated by the same family for over 65 years. Our history of organic growth and acquisitions have broadened our product portfolio. This has established Bel as a world leader with a diverse offering of power, protection and interconnect products. We design and manufacture these products which are primarily used in the networking, telecommunications, computing, military, aerospace, transportation and broadcasting industries. Bel's portfolio of products also finds application in the automotive, medical and consumer electronics markets.

About Omega

The Omega product series consists of a family of connectors qualified to the MIL-C-26500 general purpose specification. The Omega line has been expanded to also include many qualified products to numerous Boeing BACC45/BACC63 connector specifications. Utilizing the MIL-C-26500 mating interface, Cinch has also designed a high performance series of connectors with attributes for shielding, environmental sealing, fluid resistance, and vibration - namely our CN0966/CN0967/CN1020/CN1021/CN0909 connectors.

Our CN0942/CN0944 fixed contact receptacle connectors are designed specifically for custom board mount, flex circuit, and soldered wire applications. These CN series of connectors are designed to meet all electrical and mechanical requirements of the MIL-C-26500 military specification.

Table of Contents

MIL-C-26500 C48 Series

Introduction 3

C48 Series Connectors

Ordering Information 4

Inserts Arrangement 5

Plug Connectors 6

Receptacle Connectors 7

CN0915, C48 Series Connectors

Limited Wiring Space Receptacle Connectors, Crimp Removal Tool 9

CN0942/CN0944, C48 Series Connectors

Short Receptacle Connectors, Non-Removable Contacts 11

CN0942 Series: Fluorosilicone Inserts 12

CN0944 Series: Fluorosilicone Inserts 13

C48 Series Accessories

Cable Support Assembly 14

Contacts 15

CN0966 Series

Self-Locking Plugs 16

CN0967 Series

Vibration-Resistant Receptacle 17

CN1020 Series

Vibration-Resistant Plug Connector 18

CN1021 Series

Vibration-Resistant Plug Receptacle 19

CN909A MMB Series

Vibration-Resistant Plug Connector 20

C48 Series & C48 Family

Mounting Panel Data 21

Downloaded from Arrow.com.

Introduction

The C48 Series describes a family of connectors qualified to MIL-C-26500. While maintaining the MIL-C-26500 mating interface, this product has also been expanded to include qualifications to numerous Boeing specifications to satisfy general purpose requirements and unique product challenges for shielding, environmental sealing, fluid resistance, and vibration. The expanded Cinch C48 product family offers numerous product options qualified to Boeing high-performance requirements and product solutions developed for alternate termination styles/low-profile packaging.

- Qualified to MIL-C-26500
- Styles qualified to Boeing BACC45 Series
- Styles qualified to Boeing BACC63 Series
- Power contact sizes: 20, 16, and 12
- Coax contacts available: size 12 and 8
- Contacts: crimp - front release
- Optional fixed contacts: PC termination
- Coupling styles: bayonet and threaded
- Environmentally sealed

Materials

Shell	Aluminum, stainless-steel options available
Finish	Aluminum - anodize, optional electroless nickel / cadmium over nickel
Rubber	Silicone / fluorosilicone
Dielectric	Glass-filled epoxy

Environmental

Temperature Extremes	+200°C / 392°F to -55°C / -65°F
Ozone Resistance	0.015% by volume
Temperature Life	Internal 238°C for 1,000 hours
Moisture Resistance	1,000 megohms minimum / MIL-STD-202, Method 106
Thermal Shock	-55°C (-67°C) to 260°C (500°F)

Electrical

Dielectric Strength	1,500 volts VAC RMS		
Current Rating (Test)	Size 20 7.5 Amps D.C.	Size 16 13.0 Amps D.C.	Size 12 23.0 Amps D.C.
Insulation Resistance	5,000 megohms minimum		

Mechanical

Vibration	Std - 20 g's; 12 hours (Synasoidal)	MMB / Self-lock - 39.6 g's RMS, 48 hours (Random)	
	50 g's		
Contact Retention	Size 20 - 20 lb minimum	Size 16 - 25 lb minimum	Size 12 - 30 lb minimum
Durability	Threaded - 200 mating cycles	Bayonet - 500 mating cycles	

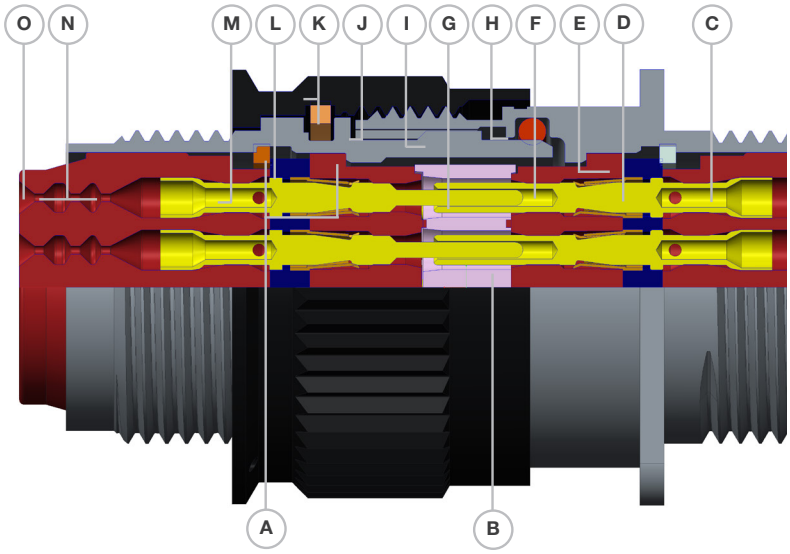

a. Positive Location Captivated Insert (Mechanical Interlock)
b. Insert Face Seal
c. Socket Contact, MIL-C-39029/32
d. Pressuring Seal Contact
e. Anti-Deflection Disc
f. Resilient Socket Insert
g. Insert Rim Seal
h. Dynamic "O" Ring Shell Seal
i. Five-Key Shell Polarization
j. Metal-to-Metal Shoulder
k. Bayonet or Threaded Coupling, Permanent Captivation
l. Contact Retention Clip
m. Pin Contact, MIL-C-39029/31
n. Wire Sealing Risers
o. Grommet

Downloaded from Arrow.com.

Ordering Information

C48-0 6 R 22-55 P 6-102

Series Designation

Coupling Style
0 = Threaded
1 = Bayonet

Shell Style
0 = Square flange receptacle
3 = Single-hole mounting receptacle
6 = Straight plug

Environmental Class
R = Meets MIL-C-26500 (USAF)

Shell Size
8, 10, 12, 14, 16, 18, 20, 22, 24

Order Code (Deviations)
100 = Connector with contacts & cable support
102 = Connector less cable support with contacts
105 = Connector less contacts with cable support
106 = Connector less contacts & less cable support
*See order codes for Boeing on page 15

Alternate Shell Positions
6, 7, 8, 9, 10, see page 4, Table 1
(Omit for normal position)

Contact Style
P = Pin
S = Socket

Insert Arrangements
See page 5

MS24266 R 22 T 55 P 6

Military Designation
MS24264 = Square-flange receptacle
MS24265 = Single-hole mounting receptacle
MS24266 = Straight plug

Environmental Class
R = Meets MIL-C-26500 (USAF)

Shell Size
8, 10, 12, 14, 16, 18, 20, 22, or 24

Alternate Shell Positions
N, 6, 7, 8, 9, Y, see page 4, Table 1

Contact Style
P = Pin
S = Socket

Insert Arrangements
See page 5

Coupling Style
T = Threaded
B = Bayonet

Table 1 - Alternate Shell Positions

Shell Keying (Front face of receptacle shown)
Alternate position 6 through Y incorporate special shell polarizing key and keyways. All inserts remain in the normal posiiton.

	Connecetor Size 8 and 10				Connecetor Size 12, 14, 16, 18, 20, 22, 24 and 28			
Position	**A**	**B**	**C**	**D**	**A**	**B**	**C**	**D**
Normal (N)	105°	140°	215°	140°	105°	140°	215°	265°
6	102°	132°	248°	275°	18°	149°	192°	259°
7	80°	118°	230°	140°	92°	152°	222°	342°
8	35°	140°	205°	275°	84°	152°	204°	342°
9	64°	155°	234°	140°	24°	135°	199°	334°
10 or Y*	25°	115°	220°	275°	98°	152°	268°	338°

*Not available in Size 8 Connectors. See indivdual part number systems.

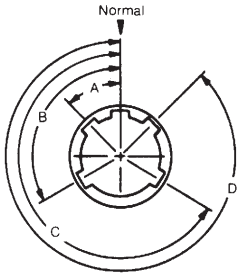

Military Stand Part Numbers

You can use MS* as well as C48 Series part numbers when ordering C48 Series connects.
*MS part numbers are supplied less cable support. If cable support is desired, it must be ordered separately.

Downloaded from Arrow.com.

Insert Arrangement

Showing Front Face of Socket Inserts

Shell Size 8

2#20 contacts
Insert 8-2(Y)

3#20 contacts
Insert 8-3(Y)

Shell Size 10

2#20 contacts
Insert 10-2(Y)

2#16 contacts
Insert 10-20

5#20 contacts
Insert 10-5(Y)

Shell Size 12

3#16 contacts
Insert 12-3

12#20 contacts
Insert 12-12(Y)

Shell Size 14

2#16 contacts
1#2 shielded contact
Insert 14-3

4#12 contacts
Insert 14-4†

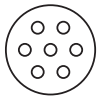

7#16 contacts
Insert 14-7

9#20 contacts
3#16 contact
Insert 14-12(Y)

15#20 contacts
Insert 14-15(Y)

Shell Size 16

10#16 contacts
Insert 16-10

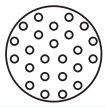

24#20 contacts
Insert 16-24(Y)

Shell Size 18

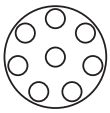

8#12 contacts
Insert 18-8†

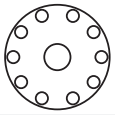

10#16 contacts
1#2 shielded contact
Insert 18-11

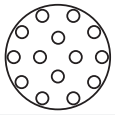

14#16 contacts
Insert 18-14

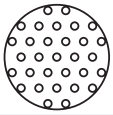

31#20 contacts
Insert 18-31(Y)

Shell Size 20

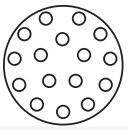

16#16 contacts
Insert 20-16

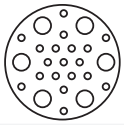

19#20 contacts
6#12 contacts
Insert 20-25†(Y)

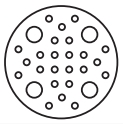

24#20 contacts
4#12 contacts
Insert 20-28†(Y)

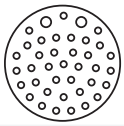

37#20 contacts
2#16 contacts
Insert 20-39†(Y)

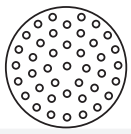

41#20 contacts
Insert 20-41(Y)

Shell Size 22

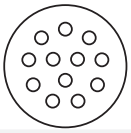

12#12 contacts
Insert 22-12†

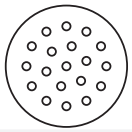

19#16 contacts
Insert 22-19

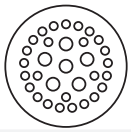

26#20 contacts
6#12 contacts
Insert 22-32†(Y)

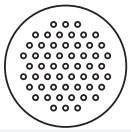

55#20 contacts
Insert 22-55(Y)

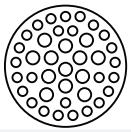

27#20 contacts
12#16 contacts
Insert 22-39(Y)

Shell Size 24

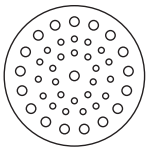

23#20 contacts
20#16 contacts
Insert 24-43(Y)

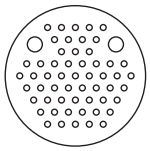

2#12 contacts
55#20 contacts
Insert 24-57†(Y)

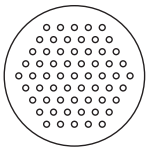

61#20 contacts
Insert 24-61(Y)

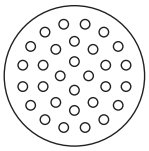

29#16 contacts
Insert 24-29

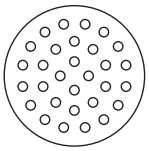

30#16 contacts
Insert 24-30

Shell Size 28

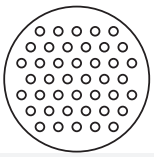

42#16 contacts
Insert 28-42

† = #1 shielded contact is interchangeable with #12 power contact.
(Y) = Available in Boeing Insert Style.

Downloaded from Arrow.com.

Plug Connectors

Threaded Couplings

C48-06RXX-XXXX
MS24266RXXTXXXX
BACC45FS[1]

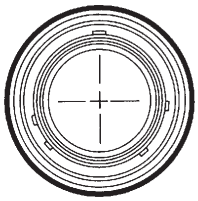

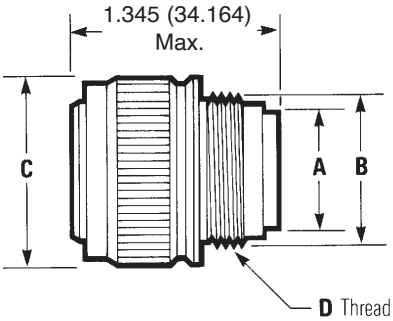

Bayonet Coupling

C48-16RXX-XXXX
MS24266RXXBXXXX
BACC45FT[1]

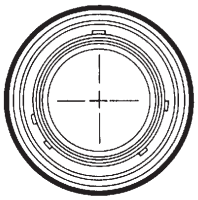

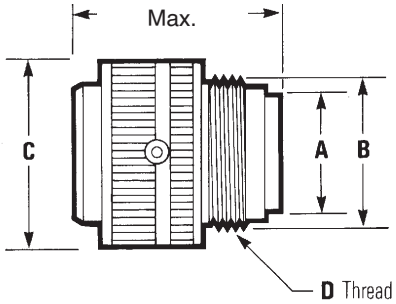

Shell Size	A Diameter		B Diameter		C Maximum		D Thread
	in	mm	in	mm	in	mm	UNEF-2A
8	0.328	8.331	0.437	11.100	0.776	19.712	0.437-28
10	0.420	10.668	0.562	14.275	0.906	23.013	0.562-24
12	0.580	14.732	0.750	19.050	1.078	27.381	0.750-20
14	0.664	16.866	0.812	20.625	1.141	28.982	0.812-20
16	0.769	19.533	0.938	23.825	1.266	32.157	0.937-20
18	0.902	22.911	1.062	26.975	1.375	34.925	1.062-18
20	1.033	26.238	1.182	30.023	1.510	38.354	1.187-18
22	1.152	29.261	1.312	33.325	1.625	41.275	1.312-18
24	1.282	32.253	1.432	36.373	1.760	44.704	1.437-18

[1]*Boeing specifications, see page 15*

Downloaded from Arrow.com.

Receptacle Connectors

Square Flange, Threaded Coupling

C48-OORXX-XXXX
MS24264RXXTXXX
BACC45FM[1]

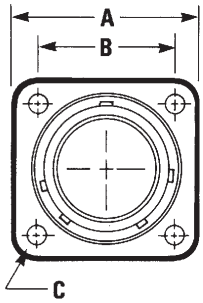

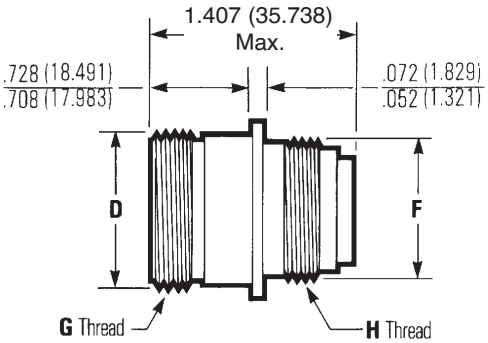

Square Flange, Bayonet Coupling

C48-1ORXX-XXXX
MS24264RXXBXXX
BACC45FN[1]

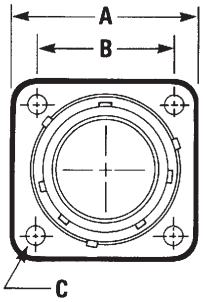

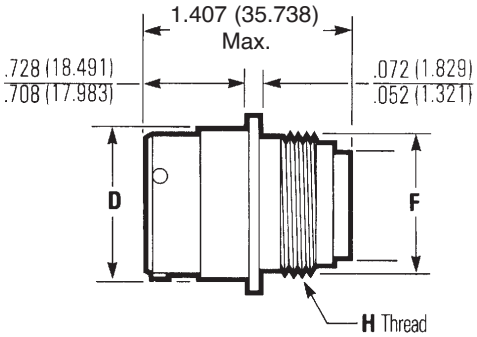

Shell Size	A ±0.005 (0.127)		B ±0.005 (0.127)		C Maximum Diameter		D Maximum		F Maximum		G Thread	H Thread	J Minimum		K Minimum	
	in	mm	in	mm	in	mm	in	mm	in	mm	UNEF-2A	UNEF-2A	in	mm	in	mm
8	0.812	20.625	0.594	15.088	0.125	3.175	0.561	14.250	0.437	11.100	0.562-24	0.437-28	0.620	15.748.	0.447	11.35
10	0.937	23.800	0.719	18.263	0.125	3.175	0.696	17.679	0.562	14.275	0.687-24	0.562-24	0.748	18.999	0.572	14.52
12	1.031	26.188	0.812	20.625	0.125	3.175	0.875	22.225	0.750	19.050	0.875-20	0.750-20	0.913	23.190	0.760	19.30
14	1.125	28.575	0.906	23.013	0.125	3.175	0.935	23.749	0.812	20.625	0.937-20	0.812-20	0.980	24.892	0.822	20.87
16	1.250	31.750	0.969	24.613	0.125	3.175	1.062	26.975	0.938	23.825	1.062-18	0.937-20	1.107	28.119	0.948	24.07
18	1.343	34.112	1.062	26.975	0.125	3.175	1.187	30.150	1.062	26.975	1.187-18	1.062-18	1.209	30.709	1.072	27.22
20	1.437	36.500	1.156	29.363	0.125	3.175	1.312	33.325	1.182	30.023	1.312-18	1.187.18	1.337	33.960	1.192	30.27
22	1.562	39.675	1.250	31.750	0.125	3.175	1.437	36.500	1.312	33.325	1.437-18	1.312.18	1.452	36.881	1.322	33.57
24	1.703	43.256	1.375	34.925	0.154	3.912	1.562	39.675	1.432	36.373	1.562-18	1.437.18	1.577	40.056	1.442	36.62

[1] *Boeing specifications, see page 15*

Downloaded from Arrow.com.

Single-Hole Mount, Threaded Coupling

C48-03RXX-XXXX
MS24265RXXTXXX

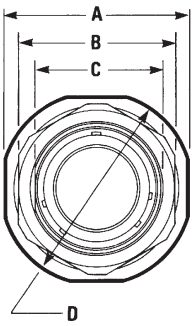

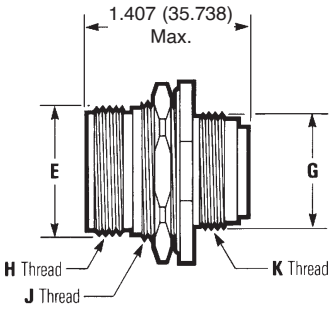

Single-Hole Mount, Bayonet Coupling

C48-13RXX-XXXX
MS24265RXXBXXX

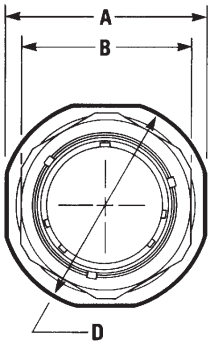

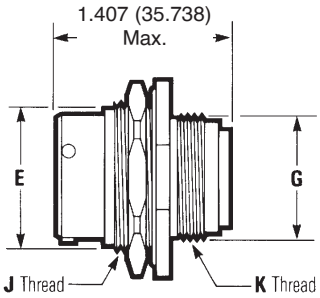

Shell Size	A ±0.005 (0.127)		B Maximum Hex		C ±0.003 (0.076)		D Maximum		E Maximum Diameter		G Maximum	H Thread	J Thread	K Thread
	in	mm	in	mm	in	mm	in	mm	in	mm	UNEF-2A	UNEF-2A	UNEF-2A	UNEF-2A
8	0.979	24.867	0.828	21.031	0.593	15.062	1.068	27.127	0.561	14.249	0.437	0.562-24	0.625-20*	0.437-28
10	1.104	28.042	0.953	24.206	0.718	18.237	1.192	30.277	0.696	17.678	0.562	0.687-24	0.750-20	0.562-24
12	1.291	32.791	1.140	28.956	0.905	22.987	1.380	35.052	0.875	22.225	0.750	0.875-20	0.937-20	0.750-20
14	1.391	35.331	1.250	31.750	0.968	24.587	1.505	38.227	0.935	23.749	0.812	0.937-20	1.000-20	0.812-20
16	1.516	38.506	1.329	33.757	1.093	27.762	1.630	41.402	1.062	26.975	0.938	1.062-18	1.125-20*	0.937-20
18	1.641	41.681	1.455	36.957	1.217	30.912	1.740	44.196	1.187	30.150	1.062	1.187-18	1.250-20*	1.062-18
20	1.766	44.856	1.642	41.707	1.342	34.087	1.860	47.244	1.312	33.325	1.182	1.312-18	1.375-18	1.187-18
22	1.954	49.632	1.705	43.307	1.467	37.262	2.040	51.816	1.437	36.500	1.312	1.437-18	1.500-20*	1.312-18
24	2.079	52.807	1.892	48.057	1.592	40.437	2.160	54.864	1.562	39.675	1.432	1.562-18	1.625-18	1.437-18

** Thread: UN-2A*

NOTES:
Contact factory for information about Boeing specifications.
For mounting hole dimensions and jam nut torques, see page 21.

Downloaded from Arrow.com.

Limited Wiring Space Receptacle Connecters, Crimp Removal Contacts

Square-Flange, Threaded Coupling

CN0915B-XXXXXXX-XXX

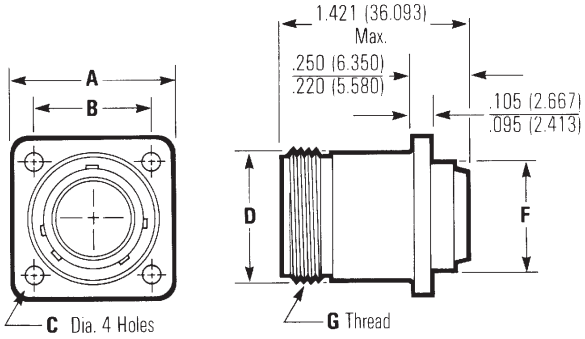

Square-Flange, Bayonet Coupling

CN0915A-XXXXXXX-XXX

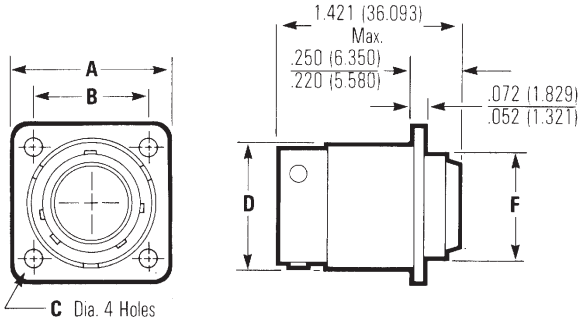

Shell Size	A ±0.0045 (0.114) in	A mm	B ±0.005 (0.127) in	B mm	C ±0.004 (0.102) in	C mm	D Maximum in	D mm	F ±0.0015 (0.038) in	F mm	G Thread UNEF-2A
8	0.812	20.625	0.594	15.088	0.121	3.073	0.561	14.250	0.497	12.624	0.562-24
10	0.937	23.800	0.719	18.263	0.121	3.073	0.696	17.679	0.503	15.799	0.687-24
12	1.031	26.187	0.812	20.625	0.121	3.073	0.875	22.225	0.745	18.923	0.875-20
14	1.125	28.575	0.906	23.012	0.121	3.073	0.935	23.749	0.871	22.123	0.937-20
16	1.150	29.210	0.969	24.613	0.121	3.073	1.062	26.975	0.995	25.273	1.062-18
18	1.343	35.382	1.062	26.975	0.121	3.073	1.187	30.150	1.058	26.873	1.187-18
20	1.437	36.500	1.156	29.362	0.121	3.073	1.312	33.325	1.184	30.074	1.312-18
22	1.562	39.675	1.250	31.750	0.121	3.073	1.437	36.500	1.307	33.198	1.437-18
24	1.703	43.256	1.375	34.925	0.154	3.912	1.562	39.675	1.432	36.373	1.562-18

NOTES:

1 For other modifications, classes, etc., contact factory
• For mounting hole dimensions, see page 21
• Uses CRIM-LOK contacts. See page 13

Downloaded from Arrow.com.

Ordering Information

CN0915 A 10 A 05 P N - 000

Series Designation
CN0915

Series Modification
A = Bayonet coupling
B = Threaded coupling

Shell Size
8, 10, 12, 14, 16, 18, 20, 22, or 24

Environmental Class
A = Anodized aluminum
N = Electroless nickel-plated aluminum
S = Stainless steel

Order Code
000 = Less contacts
200 = Gold-plated contacts

Shell Position
N, 6, 7, 8, 9, 10, see page 4, Table 1

Contact Style
P = Pin
S = Socket

Insert Arrangement
See page 5

NOTES:
1 For other modifications, classes, etc., contact factory
• For mounting hole dimensions, see page 21
• Uses CRIM-LOK contacts. See page 13
** Former order code - 100 designated rhodium plated contacts*

Downloaded from Arrow.com.

Short Receptacle Connectors, Non-Removable Contacts

Single-Hole Mount, Bayonet Coupling

CN0942D XXXXXXXXX
CN0944D XXXXXXXXX

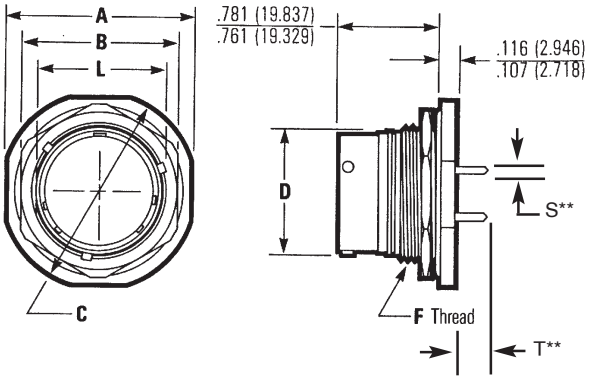

Square Flange, Bayonet Coupling

CN0942B XXXXXXXXX
CN0944B XXXXXXXXX

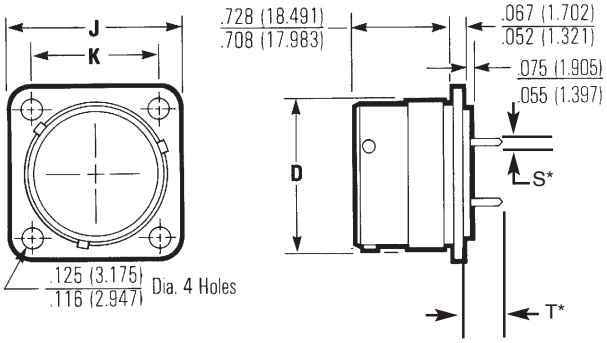

Shell Size	A Maximum		B Maximum		C Maximum		D Maximum		F Thread	J ±0.005 (0.127)		K ±0.005 (0.127)		L ±0.003 (0.076)	
	in	mm	in	mm	in	mm	in	mm	UNEF-2A	in	mm	in	mm	in	mm
8	0.984	24.994	0.828	21.031	1.068	27.127	0.561	14.250	0.625-20*	0.812	20.625	0.594	15.088	0.593	15.062
10	1.109	28.169	0.953	24.206	1.192	30.277	0.696	17.679	0.750-20	0.937	23.800	0.719	18.263	0.718	18.237
12	1.296	32.919	1.140	28.956	1.380	35.052	0.875	22.225	0.937-20	1.031	26.188	0.812	20.625	0.905	22.987
14	1.396	35.459	1.250	31.750	1.505	38.227	0.935	23.749	1.000-20	1.125	28.575	0.906	23.013	0.968	24.587
16	1.521	38.634	1.329	33.757	1.630	41.402	1.062	26.975	1.125-20*	1.250	31.750	0.969	24.613	1.093	27.762
18	1.646	41.809	1.455	36.957	1.740	44.196	1.187	30.150	1.250-20*	1.343	34.112	1.062	26.975	1.217	30.912
20	1.771	44.984	1.642	41.707	1.860	47.244	1.312	33.325	1.375-18	1.437	36.500	1.156	29.363	1.342	34.087
22	1.959	49.759	1.705	43.307	2.040	51.816	1.437	36.500	1.500-20*	1.562	39.675	1.250	31.750	1.467	37.262
24	2.084	52.934	1.892	48.057	2.160	54.864	1.562	39.675	1.625-18	1.703	43.256	1.375	34.925	1.592	40.437

** Th'd: UN-2A*

*** See "S" and "T" dimensions on page 11*

Downloaded from Arrow.com.

CN0942 Series: Fluorosilicone Inserts

Ordering Information

CN0942 B 10 J 05 P N 01

Series Designation

Series Modification
B = Square-flange mount bayonet coupled
C = Square-flange mount thread coupled
D = Single-hole mount bayonet coupled
E = Single-hole mount thread coupled

Shell Size
8, 10, 12, 14, 16, 18, 20, 22, or 24

Class
G = Cadmium/nickel finish
J = Anodized finish
N = Electroless nickel finish

Insert Arrangements
See page 5

Termination
See table

Shell Position
N, 6, 7, 8, 9, Y, see page 4, Table 1

Contact Style
Solder pin terminal
P = Pin
S = Socket
Solder cup terminal
X = Pin
Y = Socket
Wire wrap terminal
T = Pin
W = Socket

Fluorosilicone Inserts

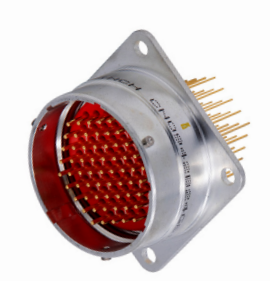

Table 2 - CN0942 Series: Fluorosilicone Inserts

Termination Designator	Contact Style	Termination	
		T Minimum	S ±0.002
01*	P & S	0.250	0.025
02*	X & Y	0.230	N/A
03**	P & S	0.144	0.025
04**	X & Y	0.124	N/A
06*	T & W	0.900	0.025

** Applies to CN0942B/CN0942C*
*** Applies to CN0942D/CN0942E*

NOTES:
[1] For other modifications, class, etc., consult factory.
For mounting hole dimensions, see page 21.

Downloaded from Arrow.com.

CN0944 Series: Neoprene Inserts

Ordering Information

CN0944 B 10 R 05 P N C 01

Series Designation

Series Modification
B = Square-flange mount bayonet coupled
C = Square-flange mount thread coupled
D = Single-hole mount bayonet coupled
E = Single-hole mount thread coupled

Shell Size
8, 10, 12, 14, 16, 18, 20, 22, or 24

Class
G = Cadmium/nickel finish
N = Electroless nickel finish
R = Anodized finish

Termination
See page 13, table 3

Termination Type
B = Solder pin
C = Solder cup
W = Wire wrap

Shell Position
N, 6, 7, 8, 9, Y, see page 4, Table 1

Contact Style
P = Pin
S = Socket

Insert Arrangements
See page 5

Neoprene Inserts

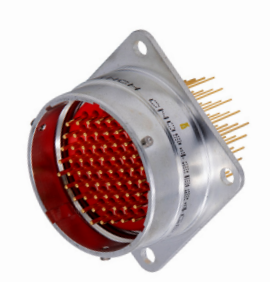

Table 3 - CN0942 Series: Neoprene Inserts

Termination Designator	Termination Type	Termination	
		T Minimum	S ±0.002
01*	B	0.250	0.025
02*	C	0.230	N/A
03**	B	0.144	0.025
04**	C	0.124	N/A
06*	W	0.900	0.025

** Applies to CN0944B/CN0944C*
*** Applies to CN0944D/CN0944E*

NOTES:
[1] For other modifications, class, etc., consult factory.
For mounting hole dimensions, see page 21.

Downloaded from Arrow.com.

Cable Support Assembly

Cable clamps support cable or wire at the plug or receptacle and prevent twisting and pulling. For use on C48 Series connectors.

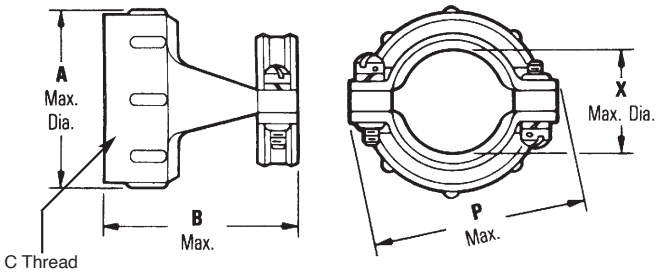

Shell Size	Cinch Part Number	MS Part Number	A Maximum		B ±0.005 (0.381)		X I.D. ±0.005 (0.127)		C Th'D		P Maximum	
			in	mm	in	mm	in	mm	in	mm	in	mm
8	C48-2840	MS27291-13	0.606	15.393	0.935	23.749	0.186	4.725	0.437-28	0.789	20.042	20.042
10	C48-2341	MS27291-1	0.731	18.568	0.935	23.749	0.270	6.858	0.562-24	0.914	23.216	23.216
12	C48-2342	MS27291-2	0.919	23.343	0.935	23.749	0.400	10.160	0.750-20	1.026	26.061	26.061
14	C48-2343	MS27291-3	0.981	24.918	1.170	29.718	0.460	11.684	0.812-20	1.090	27.686	27.686
16	C48-2344	MS27291-4	1.106	28.093	1.170	29.718	0.610	15.494	0.937-20	1.250	31.750	31.750
18	C48-2345	MS27291-5	1.231	31.268	1.170	29.718	0.690	17.526	1.062-18	1.358	34.493	34.493
20	C48-2643	MS27291-14	1.356	34.443	1.170	29.718	0.816	20.728	1.187-18	1.481	37.619	37.619
22	C48-2346	MS27291-6	1.481	37.618	1.170	29.718	0.940	23.876	1.312-18	1.604	40.742	40.742
24	C48-2644	MS27291-15	1.606	40.793	1.170	29.178	1.066	27.078	1.437-18	1.729	43.919	43.919

Downloaded from Arrow.com.

Contacts

When you order Cinch C48 Series connectors with contacts, the contact package contains enough contacts to complete the insert arrangement plus two spares. The package also includes sealing plugs for 15% of the contacts in the inserts, minimum of three. To provide proper sealing, insert unwired contacts and sealing plugs in all unused holes. (Use a #12 contact for a #1 shielded hole.) To order contacts and sealing plugs separately use the part numbers in the table below.

Cinch Part Number Contacts Pin	Cinch Part Number Contacts Socket	MS Part Number Contacts Pin	MS Part Number Contacts Socket	Boeing Part Number Contacts Pin	Boeing Part Number Contacts Socket	Contact Size (Sheilded)	Maxium Wire Size AWG	Current Rating Amps
C48-1226-02	C48-1227-02					No. 1*	**	3
C48-1226-54	C48-1227-54						****	1
C48-1226-55	C48-1227-55						*****	1
C48-2187-02	C48-2188-02					No. 2	***	7.5
		M32029/31-235	M39029/32-254	BACC47CN3S	BACC47CP3S	No. 12	12	41
							14	32
		M39029/31-229	M39029/32-248	BACC47CN2S	BACC47CP2S	No. 16	16	22
							18	16
		M39029/31-627	M39029/32-260	BACC47CN1S	BACC47CP1S	No. 20	20	7.5
							22	5.0
							24	3.0

* *Fits into No. 12 power contact cavity.*
** *Accommodates cables RG174/U, RG179U, RG179A/U, RG187/U, RG188/U, RG161/U, as well as shielded wire. Can also accommodate Cable MIL-C-27500-22 KING (Extruded) or 22 AWG per MIL-C-7078 type II.*
*** *Accommodates Cable MIL-C-27500 KING; 20 KING; 18 KING (Extruded) or 22, 20, 18 AWG, per MIL-C-7078 type II.*
**** *For use with RG195/U and RG180/U, RG180A/U, and RG1808/U.*
***** *Accommodates Cables RG178/U, RG178A/U, RG1788/U, and RG196/U.*

Grommet Sealing Plugs

MS Part Number	Color Code	Size
MS27488-20-2	Red	20
MS27488-16-2	Green	16
MS27488-12-2	Orange	12

Insertion/Removal Tools

Insertion Tool	Removal Tool	Crimp Tool	Adjustable Turret	Contact Size
M81969/17-03	M81969/19-06	M22520/1-01	MS22520/1-02	No. 20
M81969/17-04	M81969/19-01	M22520/1-01	MS22520/1-02	No. 16
M81969/17-05	M81969/19-02	M22520/1-01	MS22520/1-02	No. 12

Crimp/Insertion/Removal tools are listed only for reference, tools are procured from tool manufacture or authorized distributor.

Downloaded from Arrow.com.

Self-Locking Plug Connectors

Ordering Information

CN0966 B 10 S 05 P N - 000

Series Designation

Series Modification
A = Ungrounded
B = Grounded (conductive)

Shell Size
8, 10, 12, 14, 16, 18, 20, 22, 24, 26, 28

Class
A = Anodized aluminum
G = Cadmium/nickel-plated aluminum
N = Electroless nickel-plated aluminum
S = Stainless steel

Order Code
000 = Less contacts
100 = *See below
200 = With gold-plated contact

Alternate Shell Positions
N, 6, 7, 8, 9, 10
See page 4, table 1

Contact Style
P = Pin
S = Socket

Insert Arrangements
See page 5

Threaded Coupling

CN0966XXXXXXXX
BACC63BP[1]

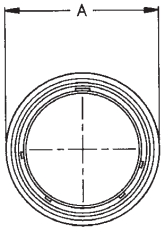

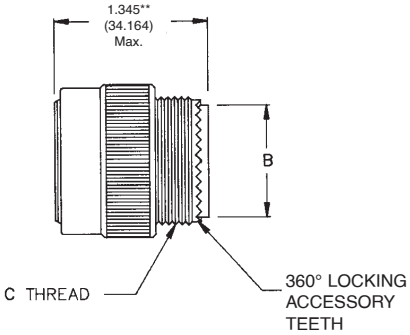

Size	A ±0.005 (0.127)		B Maximum Diameter		C Thread
	in	mm	in	mm	UNEF-2A
8	0.835	21.209	0.306	7.773	0.500-20
10	0.972	23.698	0.371	9.423	0.625-24
12	1.165	27.254	0.547	13.894	0.750-20
14	1.230	30.124	0.613	15.570	0.875-20
16	1.355	33.198	0.758	19.253	1.000-20
18	1.470	34.798	0.865	21.971	1.0625-18
20	1.607	38.100	0.986	25.044	1.1875-18
22	1.735	41.148	1.106	28.092	1.3125-18
24	1.858	44.069	1.235	31.369	1.4375-18
28	2.113	52.070	1.485	37.719	1.750-18*

NOTES:

[1] For modifications, classes, etc. not listed, consult factory
** Th'd: UNS-2A*
*** Size 28 = 1.395 (35.434)*
**** Former order code - 100 designated rhodium plated contacts***

Downloaded from Arrow.com.

Vibration-Resistant Receptacle

Ordering Information

CN0967 C 10 S 05 P N - 000

Series Designation

Series Modification
C = Square-flange mount
G = Square-flange with clinch nuts

Shell Size
8, 10, 12, 14, 16, 18, 20, 22, 24, 26, 28

Class
A = Anodized aluminum
G = Cadmium/nickel-plated aluminum
K = Stainless steel flame resistant
N = Electroless nickel-plated aluminum
S = Stainless steel

Order Code
000 = Less contacts
100 = *See below
200 = With gold-plated contact

Alternate Shell Positions
N, 6, 7, 8, 9, 10
See table 4, table 1

Contact Style
P = Pin
S = Socket

Insert Arrangements
See page 5

Threaded Coupling

CN0967XXXXXXXX
BACC63BV[1]

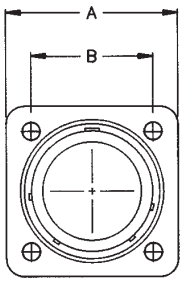

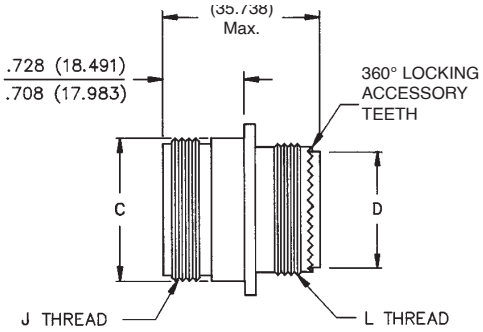

Size	A ±0.0045 (0.114)		B ±0.005 (0.127)		C Maximum		D Maximum		J Thread	L Thread
	in	mm	in	mm	in	mm	in	mm	UNEF-2A	UNEF-2A
8	0.812	20.625	0.594	15.088	0.561	14.250	0.328	8.331	0.5265-24	0.5000-20
10	0.937	23.800	0.719	18.263	0.696	14.250	0.371	9.423	0.6875-24	0.6250-24
12	1.031	26.187	0.812	20.625	0.875	17.679	0.547	13.894	0.8750-20	0.7500-20
14	1.125	28.575	0.906	23.012	0.935	22.225	0.609	15.469	0.9375-20	0.8750-20
16	1.250	31.750	0.969	24.613	1.062	23.749	0.758	19.253	1.0625-18	1.0000-20
18	1.343	34.112	1.062	26.975	1.187	30.150	0.865	21.971	1.875-18	1.0625-18
20	1.437	36.500	1.156	29.362	1.312	33.325	0.986	25.044	1.3125-18	1.1875-18
22	1.562	39.675	1.250	31.750	1.437	36.500	1.106	28.092	1.4375-18	1.3125-18
24	1.703	43.256	1.375	34.925	1.562	39.675	1.235	31.369	1.5625-18	1.4375-18
28	2.000	50.800	1.562	39.675	1.810	45.976	1.485	37.719	1.8125-16	1.750-18*

NOTES:

1 For modifications, classes, etc., not listed, consult factory
• For mounting hole dimensions, see page 21
** Th'd: UNS-2A*
***Size 28 = 1.457 (37.008)*
**** Former order code - 100 designated rhodium plated contacts***

Downloaded from Arrow.com.

Vibration-Proof Plug Connector

Ordering Information

CN1020 A 10 G 05 P N - 000

Series Designation

Series Modification
A = Standard plug

Shell Size
8, 10, 12, 14, 16, 18, 20, 22, 24, 26, 28

Class
A = Anodized aluminum
G = Cadmium/nickel-plated aluminum

Order Code
000 = Less contacts
100 = *See below
200 = With gold-plated contact

Alternate Shell Positions
N, 6, 7, 8, 9, 10
See page 4, table 1

Contact Style
P = Pin
S = Socket

Insert Arrangements
See page 5

Bayonet Coupling

CN1020-XXXXXXXX
BACC63CB1

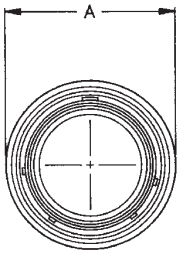

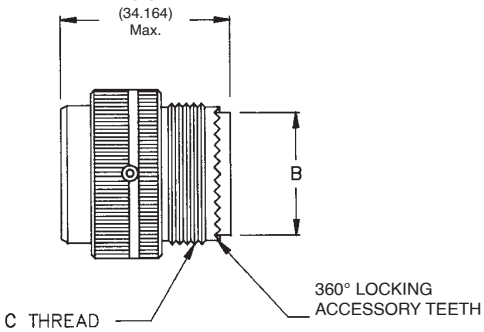

Size	A ±0.005 (0.127)		B Maximum Diameter		C Thread
	in	mm	in	mm	UNEF-2A
8	0.765	19.447	0.306	7.773	0.500-20
10	0.967	24.561	0.371	9.423	0.625-24
12	1.078	27.381	0.547	13.894	0.750-20
14	1.187	30.149	0.613	15.570	0.875-20
16	1.309	33.248	0.758	19.253	1.000-20
18	1.375	34.925	0.865	21.971	1.0625-18
20	1.505	38.227	0.986	25.044	1.1875-18
22	1.625	41.275	1.106	28.092	1.3125-18
24	1.755	44.577	1.235	31.369	1.4375-18
28	2.161	54.889	1.485	37.719	1.750-18*

NOTES:

[1] For modifications, classes, etc., not listed, consult factory
• For mounting hole dimensions, see page 21
** Th'd: UNS-2A*
***Size 28 = 1.395 (35.434)*
** Former order code - 100 designated rhodium plated contacts*

Downloaded from Arrow.com.

Vibration-Resistant Receptacle

Ordering Information

CN1021 A 10 G 05 P N - 000

Series Designation

Series Modification
A = Square-flange mount
C = Square-flange with clinch nuts

Shell Size
8, 10, 12, 14, 16, 18, 20, 22, 24, 26, 28

Class
A = Anodized aluminum
G = Cadmium/nickel-plated aluminum

Order Code
000 = Less contacts
100 = *See below
200 = With gold-plated contact

Alternate Shell Positions
N, 6, 7, 8, 9, 10
See page 4, table 1

Contact Style
P = Pin
S = Socket

Insert Arrangements
See page 5

Bayonet Coupling

CN1021XXXXXXXX
BACC63CC[1]

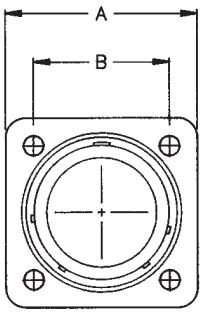

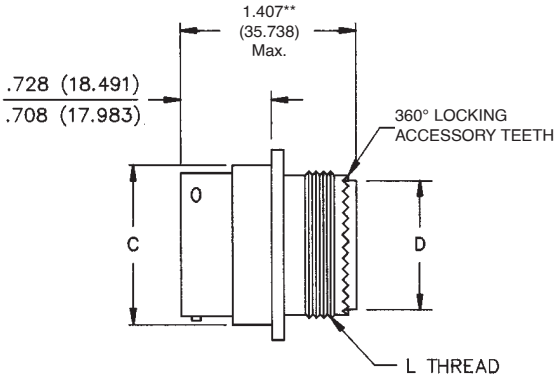

Size	A ±0.0045 (0.114)		B ±0.005 (0.127)		C Maximum		D Maximum Diameter		L Thread
	in	mm	in	mm	in	mm	in	mm	UNEF-2A
8	0.812	20.625	0.594	15.088	0.561	14.250	0.328	8.331	0.500-20
10	0.937	23.800	0.719	18.263	0.696	14.250	0.371	9.423	0.625-24
12	1.031	26.187	0.812	20.625	0.875	17.679	0.547	13.894	0.750-20
14	1.125	28.575	0.906	23.012	0.935	22.225	0.609	15.469	0.875-20
16	1.250	31.750	0.969	24.613	1.062	23.749	0.758	19.253	1.000-20
18	1.343	34.112	1.062	26.975	1.187	30.150	0.865	21.971	1.0625-18
20	1.437	36.500	1.156	29.362	1.312	33.325	0.986	25.044	1.1875-18
22	1.562	39.675	1.250	31.750	1.437	36.500	1.106	28.092	1.3125-18
24	1.703	43.256	1.375	34.925	1.562	39.675	1.235	31.369	1.4375-18
28	2.000	50.800	1.562	39.675	1.810	45.976	1.485	37.719	1.750-18*

NOTES:

[1] For modifications, classes, etc., not listed, consult factory
• For mounting hole dimensions, see page 21
** Th'd: UNS-2A*
***Size 28 = 1.457 (37.008)*
** Former order code - 100 designated rhodium plated contacts*

Downloaded from Arrow.com.

Vibration-Proof Plug Connector

Ordering Information

C0909A 10 - 05 P 8 - XXX

Series Designation

Shell Size
8, 10, 12, 14, 16, 18, 20, 22, 24

Class
(Dash) = Anodized aluminum
E = Cadmium/nickel-plated aluminum
N = Nickel-plated aluminum

Order Code
202 = with gold-plated contacts*
106 = Less contacts

Alternate Shell Positions
N, 6, 7, 8, 9, 10
See page 4, table 1

Contact Style
P = Pin
S = Socket

Insert Arrangements
See page 5

Bayonet Coupling

CN909AXXXXXXX
BACC63BN[1]

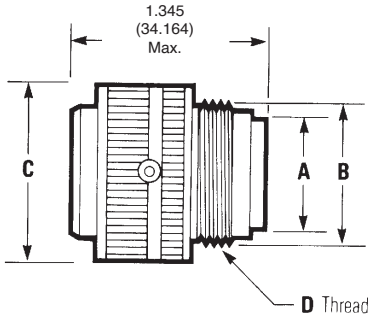

Size	A Diameter		B Diameter		C Maximum		D Thread
	in	mm	in	mm	in	mm	UNEF-2A
8	0.328	8.331	0.437	11.100	0.766	19.456	0.437-28
10	0.420	10.668	0.562	14.275	0.906	23.012	0.562-24
12	0.580	14.732	0.750	19.050	1.078	27.381	0.750-20
14	0.664	16.866	0.812	20.625	1.141	28.981	0.812-20
16	0.769	19.533	0.938	23.825	1.266	32.156	0.937-20
18	0.902	22.911	1.062	26.975	1.375	34.925	1.062-18
20	1.033	26.238	1.182	30.023	1.510	38.354	1.187-18
22	1.152	29.261	1.312	33.325	1.625	41.275	1.312-18
24	1.282	32.253	1.432	36.373	1.760	44.704	1.437-18

NOTES:

[1] For deviations, classes, etc. not listed, consult factory
** Former order code - 102 designated rhodium plated contacts*

Downloaded from Arrow.com.

Mounting Panel Data

Square-Flange Mount

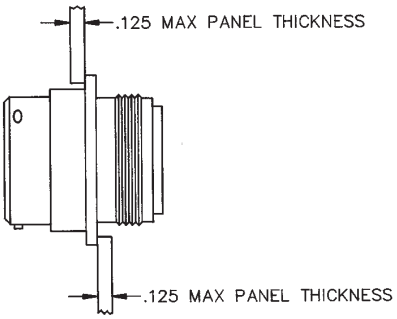

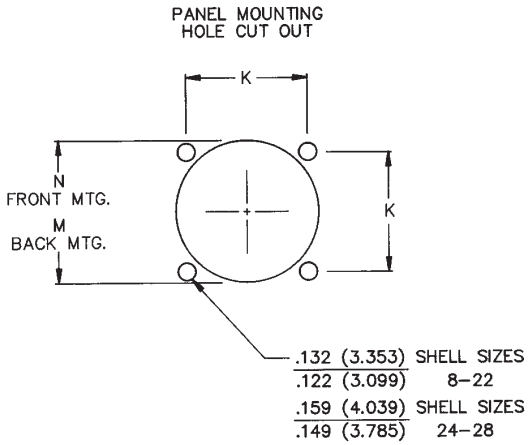

Single-Hole Mount (Jam-Nut Mount)

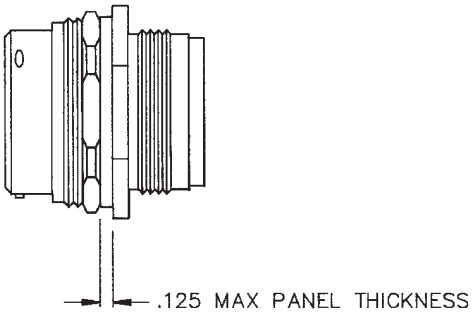

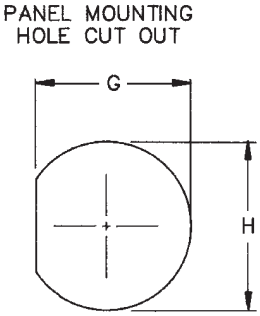

Size	M Minimum in	M Minimum mm	N Minimum in	N Minimum mm	G ±0.005 (0.127) in	G ±0.005 (0.127) mm	H ±0.005 (0.127) in	H ±0.005 (0.127) mm	K ±0.005 (0.127) in	K ±0.005 (0.127) mm
8	0.620	15.748	0.447	11.354	0.605	15.638	0.635	16.129	0.594	15.088
10	0.748	18.999	0.572	14.529	0.730	18.542	0.760	19.304	0.719	18.263
12	0.913	23.190	0.760	19.304	0.917	23.292	0.947	24.054	0.812	20.625
14	0.980	24.892	0.822	20.879	0.980	24.892	1.010	25.654	0.906	23.013
16	1.107	28.119	0.948	24.079	1.105	28.067	1.135	28.829	0.969	24.613
18	1.209	30.709	1.072	27.229	1.225	31.115	1.260	32.004	1.062	26.975
20	1.337	33.906	1.192	30.277	1.350	34.290	1.385	35.179	1.156	29.363
22	1.452	36.881	1.322	33.579	1.475	37.465	1.510	38.354	1.250	31.750
24	1.577	40.056	1.442	36.627	1.600	40.640	1.635	41.529	1.375	34.925
28	1.827	46.406	1.760	44.704	1.856	47.143	1.885	47.879	1.562	39.675

Recommended Minimum Torque for Jam Nut

Shell Size	8	10	12	14	16	18	20	22	24
Torque (inch/lb)	28	36	56	64.5	69	81	102	122.5	144

Downloaded from Arrow.com.

About Cinch Connectivity Solutions

For over 100 years, Cinch Connectivity Solutions has manufactured high-quality and reliable high-performance connectors and cable assemblies. Cinch is recognized as a world class connectivity supplier of RF, fiber optic, hybrid, microwave components, circular, d-subminiatures, modular rectangular, electronic enclosures and cable assemblies.

Cinch provides innovative solutions to the military, commercial aerospace, networking, telecommunication, test and measurement, oil and gas and other harsh environment industries.

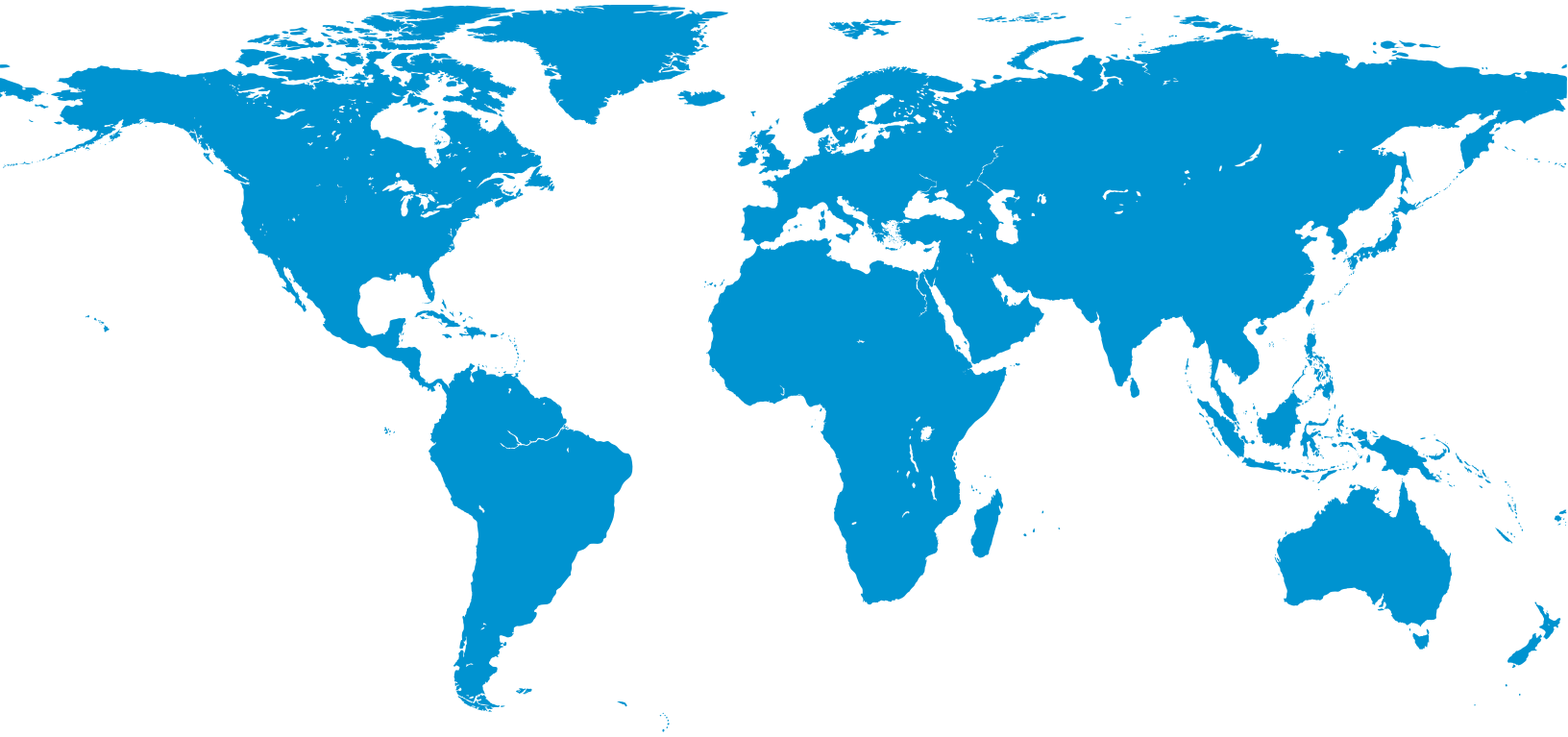

For more information, please contact us:

North America
+1 507.833.8822
ccsorders@us.cinch.com

Asia-Pacific
+86 21 5442 7668
ccs.asia.sales@as.cinch.com

Europe, Middle East
+44 (0) 1245 342060
CinchConnectivity@eu.cinch.com

cinch
CONNECTIVITY SOLUTIONS
a bel group

belfuse.com/cinch.com

ca-ccs-omega-catalog-11302021
© 2021 Cinch Connectivity Solutions

Downloaded from Arrow.com.