CA1544-000 ✔ ACTIVE

TE Internal #: CA1544-000

TE Internal Description: HT-SCE-1K-3/16-2.0-4

View on TE.com >

Product Compliance

For compliance documentation, visit the product page on TE.com>

EU RoHS Directive 2011/65/EU	Compliant
EU ELV Directive 2000/53/EC	Compliant
China RoHS 2 Directive MIIT Order No 32, 2016	有害物质含量符合标准要求 No Restricted Substance(s) Above Threshold
EU REACH Regulation (EC) No. 1907/2006	Current ECHA Candidate List: JUNE 2025 (250) Candidate List Declared Against: JAN 2025 (247) Does not contain REACH SVHC
Halogen Content	Low Bromine/Chlorine - Br and Cl < 900 ppm per homogenous material. Also BFR /CFR/PVC Free
Solder Process Capability	Not applicable for solder process capability

Product Compliance Disclaimer

This information is provided based on reasonable inquiry of our suppliers and represents our current actual knowledge based on the information they provided. This information is subject to change. The part numbers that TE has identified as EU RoHS compliant have a maximum concentration of 0.1% by weight in homogenous materials for lead, hexavalent chromium, mercury, PBB, PBDE, DBP, BBP, DEHP, DIBP, and 0.01% for cadmium, or qualify for an exemption to these limits as defined in the Annexes of Directive 2011/65/EU (RoHS2). Finished electrical and electronic equipment products will be CE marked as required by Directive 2011/65/EU. Components may not be CE marked. Additionally, the part numbers that TE has identified as EU ELV compliant have a maximum concentration of 0.1% by weight in homogenous materials for lead, hexavalent chromium, and mercury, and 0.01% for cadmium, or qualify for an exemption to these limits as defined in the Annexes of Directive 2000/53/EC (ELV). Regarding the REACH Regulation, the information TE provides on SVHC in articles for this part number is based on the latest European Chemicals Agency (ECHA) 'Guidance on requirements for substances in articles' posted at this URL: https://echa.europa.eu/guidance-documents/guidance-on-reach

Compatible Parts



TE Part # 1-2186503-1
T3224-SWARE-PRINTER



TE Part # 1-2186500-1
T3212-PRINTER



TE Part # 1-2186502-1
T3224-PRINTER

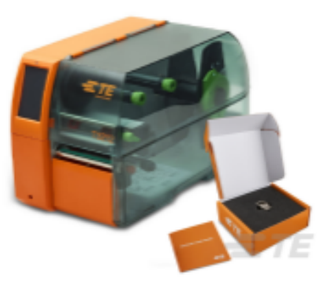

TE Part # 1-2186501-1
T3212-SWARE-PRINTER

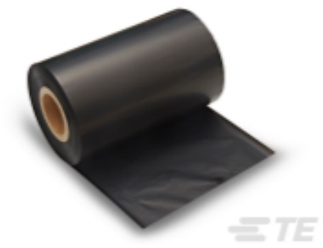

TE Part # 754073-000
TMS-RJS-RIBBON-4HT

Customers Also Bought



TE Part #CAT-D48-ST273
DEUTSCH Connector Solid Contacts



TE Part #DT04-2P
REC, 2P, GRY, N



TE Part #CAT-D487-W416
Wedgelocks: DEUTSCH DT



TE Part #DT06-2S
PLG, 2P, GRY, N



TE Part #114017-ZZ
SEALING PLUG, SIZE 12/16, WHT

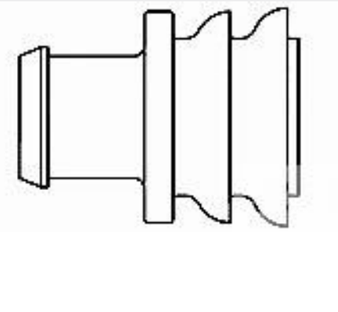

TE Part #281934-2
SINGLE WIRE SEAL



TE Part #CAT-AM71-CH8172
AMP SUPERSEAL 1.5MM, CONNECTOR HOUSING

Documents

Datasheets & Catalog Pages

HT-SCE High Temperature Heat Shrink Identification System

English

Cable Identification Product Shelf Life

English

Product Specifications

IDENTIFCATION PRINTER PRODUCT RIBBON MATRIX

English

Instruction Sheets

Instruction Sheet (non U.S.)

English