HPT5K0-L series

XP Power

5kW Fan cooled

AC-DC power supplies

The HPT5K0-L series offers ultimate flexibility with both output voltage and output current programming and user defined signals, warnings and alarms. Programming is via voltage, I²C PMBus, RS485 and CANopen in a very high efficiency, high power density 5kW chassis mount package. The HPT-L can be used in both constant voltage and constant current operation.

Measuring just 13.25” x 10.00” x 2.50” the HPT5K0-L also features active current sharing, remote on/off, remote sense and a power OK signal. The standby output is available whenever the mains supply is present.

PMBus

Features

- 3 phase 180 to 528VAC input - 3 wire and earth
- High efficiency - up to 94%
- Programmable output voltage (0-105%)
- Programmable output current (0-110%)
- Parallel operation
- Analog and digital interfaces
- Multiple digital protocols - PMBus, CANopen, MODBUS and SCPI
- Fully featured signals and controls
- 5V/2A standby output
- Graphical user interface (GUI)
- SEMI F47 compliant
- 3 year warranty

Applications

Healthcare

Industrial Electronics

Semiconductor Manufacturing

Technology

Dimensions

336.5 x 254.0 x 63.5 mm
(13.25 x 10.00 x 2.50 in)

More resources

Click the link or scan the code

→ xppower.com

Models & ratings

Model number[2]	Max output power	Output voltage V1			Output current		Efficiency[1]
		Minimum	Nominal[3]	Maximum	Minimum	Maximum	
HPT5K0TS048-L	5kW	0VDC	48VDC	50.4VDC	0.0A	104.0A	93%
HPT5K0TS060-L	5kW	0VDC	60VDC	63.0VDC	0.0A	83.3A	93%
HPT5K0TS100-L	5kW	0VDC	100VDC	105.0VDC	0.0A	50.0A	93%
HPT5K0TS200-L	5kW	0VDC	200VDC	210.0VDC	0.0A	25.0A	93%

Notes:

1. Measured with 480VAC input and full load.
2. Standard models include PMBus, CANopen and RS485 interfaces. RS485 default is full duplex. RS485 half duplex can be configured via I²C or factory configured on request.
3. 48V output classified as ES1 and PS3 for IEC/EN62368-1.

HPT5K0-L series

Input

Characteristic	Minimum	Typical	Maximum	Units	Notes & conditions
Input voltage	180		264	VAC	3kW output power max, 3 wire & earth
	342		528		5kW output power max, 3 wire & earth
Input frequency	47		63	Hz	
Power factor		0.96			Complies with EN61000-3-2 for Class A
Input current			10/11	A	Per phase, 342VAC (5 kW)/180 VAC (3kW)
Inrush current			60	A	Per phase, 528VAC (5 kW)
Earth leakage current			1.0	mA	528 VAC/60Hz
			3.3		528 VAC/60Hz, single fault
Input protection	F16A/500 V fuse fitted in each phase				
Loss of phase	Shut down after 0.5s, auto-recovery				

Output

Characteristic	Minimum	Typical	Maximum	Units	Notes & conditions
Output voltage	0		210	VDC	See Models and ratings table
Output set tolerance		±0.5		%	Nominal voltage irrespective of set voltage.
+5V standby tolerance		±4		%	5V/2A standby
Output voltage program	0		105	%	Of nominal, slew rate <40ms 10-105% & 105-10%. Max frequency of voltage program is 0.5Hz 0-5% load, 0.67Hz 5-10% load, 1Hz 10-20% load, 3Hz 20-100% load
Output voltage adjust	±10			%	Of set output via potentiometer 105% of nominal max.
Output current program	0		110	%	Of nominal
Minimum load	0			A	No minimum load required
Start up delay		2.0	2.3	s	Under all load and line conditions
Start up rise time			40	ms	
Hold up time	20	22		ms	380 VAC at 5000W and 25°C
	40	44			180 VAC at 3000W and 25°C
Line regulation			±0.5	%	Of nominal voltage
			±0.5		5V Standby
Load regulation			1	%	0-100% or 100-0% load
			2		5V Standby
Transient response			3	%	Deviation with a 50-75-50% load change. Output returns to within 1% in less than 500µs
Ripple & noise			1/2.5	%	Of nominal voltage/5V Standby. Measured with 20MHz bandwidth limited oscilloscope 0-50°C.
Overshoot			5	%	Turn on & turn off
Overvoltage protection	110		120	%	Of nominal voltage, latching. Cycle AC to reset. No protection for 5V Standby
Overtemperature protection	Auto resetting thermal protection				
Overload protection			±3	% of max load	Set current limit point. Constant current characteristics. Max current limit is 108% ±3% of maximum rated current. For low line (180-264VAC), constant power characteristic set at 3.4W until current limit point is reached. 5V Standby: <5A max
Temperature coefficient			0.03	%/°C	Of maximum load
Short circuit protection	Constant current characteristics. 5V Standby: Foldback characteristic < 5A max.				
Remote sense	Compensates for 1% max of nominal voltage per lead, 2% of total nominal voltage drop. Not fitted on HPT5K0TS200-L.				

HPT5K0-L series

General

Characteristic	Minimum	Typical	Maximum	Units	Notes & conditions
Efficiency	92	93		%	Measured from 342 to 528 VAC, 5V Standby at full load.
Isolation: Input to output	6000(1)			VDC	
Input to ground	4000(1)			VDC	
Output to ground	500			VDC	
Switching frequency	55	60	65	kHz	Fixed frequency PFC
	40		250	kHz	Variable frequency main converter
Power density			15.38	W/in³	
Signals and controls	V Program, I Program, AC OK, DC OK, Fan Fail/Temperature Warning, Sync, PMBus, Inhibit, Current Share.				
MTBF		600		kHrs	Telecordia 332
Weight		12.5 (5.7)		lb (kg)	

1. Rating for complete assembly with HI-POT screw removed (see mechanical details for screw position). Maximum isolation test voltage is 2121VDC with screw installed.

Environmental

Characteristic	Minimum	Typical	Maximum	Units	Notes & conditions
Operating temperature	-20		70	°C	Derate linearly from 50°C to 50% rated power at 70 °C
Storage temperature	-40		+85	°C	
Cooling					Force-cooled with intelligent fan speed control
Humidity	5		95	%RH	Non-condensing
Operating altitude			3000	m	Medical
			5000		ITE
Transport altitude			10000	m	
Shock	±3 x 30 g shocks in each plane, total 18 shocks. 30 g = 11 ms (±0.5 ms) half sine. Conforms to EN60068-2-27 & EN60068-2-47				
Vibration	Single axis 10-500 Hz at 2 g sweep and endurance at resonance in all 3 planes. Conforms to EN60068-2-6				
Acoustic noise	< 70db(A) Lw				

Signals & controls

	Function
V Program(1)(2)	0V to 5V signal will program Vout from 0-105%. VProg accurancy ±1% of nominal output voltage. When left open, supply will go into its default operating mode.
I Program(1)(2)	0V to 5V signal will program the current limit from 0-110%. When this signal is left open, supply will go into its default operating mode. IProg accurancy ±2% of maximum rating.
AC OK	LOW = Input Voltage is within operating range, HIGH = Input Voltage is outside of operating range or there is a loss of phase. Uncommitted opto-transistor, 2 ms warning time
DC OK	When the supply is used as a variable output supply, this signal is disabled. When the supply is programmed as a fixed output supply, LOW = Vout > 95% of Vnominal. This level is programmable by the user through the PMBus. Uncommitted opto-transistor
Fan Fail/Temp Warning	High = Fan FAIL and/or overtemperature, Low = Fan OK and temperature OK (3.3V Logic), unit switches off 10 s after Fan Fail/Temp Warning alarm, auto recovery. XP GUI available for download, contact sales.
Sync.	Connect parallel units to synchronise output turn on.
PMBus, CANopen and RS485	Operation of the product using the Fieldbus interfaces and associated protocols is defined in the supporting document 'HPT5K0/HPL5K0 Communication, Control and Status Specification'. Installation and use of the XP PS Manager software (graphical user interface) is defined in the supporting document 'XP PS Manager User Manual'. These documents are available through our website. Analogue to digital monitoring accuracy: Vout monitor accuracy ±1% of nominal voltage. Iout monitor accuracy ±2% of full load. Vout & Iout setting accuracy are ±1% & ±2% respectively
Current Share	Connecting pin 23 on one unit to pin 23 on a like voltage unit will force the current to be shared. Up to 5 units can be paralleled. Current share accuracy ±3% of full load of single unit.
Inhibit	Uncommitted opto diode. See Signals & controls.

(1) In analog mode, the default Vout and Iout settings are 0% when open circuit.

(2) To activate analog mode, PMBus_EN (pin 24) must be pulled down to SGND or 5VSBY return. Default when open is digital progamming.

HPT5K0-L series

EMC: emissions

Phenomenon	Standard	Test Level	Notes & conditions
Conducted	EN55011/EN55032	Class B	
Radiated	EN55011/EN55032	Class A	
Harmonic currents	EN61000-3-2	Class A	

EMC: immunity

Phenomenon	Standard	Test level	Criteria	Notes & conditions
ESD immunity	EN61000-4-2	4	A	±8 kV contact / ±15 kV air discharge
Radiated immunity	EN61000-4-3	3	A	
EFT/Burst	EN61000-4-4	3	A	
Surge	EN61000-4-5	Installation class 4	A	
Conducted	EN61000-4-6	3	A	
Magnetic field	EN61000-4-8	4	A	
Dips and interruptions	EN61000-4-11 (200/380 VAC)	Dip 100% (0 VAC), 8.4ms	A	
		Dip 100% (0 VAC), 16.7ms	A	
		Dip 60% (80/152 VAC), 200ms	A	
		Dip 30% (140/266 VAC), 500ms	A	
		Dip 20% (160/304 VAC), 5000ms	B	
		Int 100% (0 VAC), 5000ms	B	
	EN61000-4-11 (240/480 VAC)	Dip 100% (0 VAC), 10ms	A	
		Dip 100% (0 VAC), 20ms	A	
		Dip 60% (96/192 VAC), 200ms	A	
		Dip 30% (168/336 VAC), 500ms	A	
		Dip 20% (192/384 VAC), 5000ms	B	
		Int 100% (0 VAC), 5000ms	B	
	EN60601-1-2 (200/380 VAC)	Dip 100% (0 VAC), 10ms	A	
		Dip 100% (0 VAC), 20ms	A	
		Dip 60% (80/152 VAC), 100ms	A	
		Dip 30% (140/266 VAC), 500ms	A	
		Int 100% (0 VAC), 5000ms	B	
	EN60601-1-2 (240/480 VAC)	Dip 100% (0 VAC), 10ms	A	
		Dip 100% (0 VAC), 20ms	A	
		Dip 60% (96/192 VAC), 100ms	A	
		Dip 30% (168/336 VAC), 500ms	A	
		Int 100% (0 VAC), 5000ms	B	
	SEMI F47-0706	480VAC nominal	A	

Safety approvals

Safety agency	Safety standard	Notes & conditions
CB report	IEC62368-1 Ed 2	Information technology
	IEC60601-1 Ed 3 Including Risk Management	Medical
UL	UL62368-1, CSA 22.2 No.62368-1, UL60950-1	Information technology
	ANSI/AAMI ES60601-1:2005 & CSA C22.2, No.60601-1:08	Medical
TUV	EN62368-1	Information technology
	EN60601-1/2006	Medical
CE	Meets all applicable directives	
UKCA	Meets all applicable legislation	
Equipment protection class	Class I	See safety agency conditions of acceptibility for details

Means of protection		Notes & conditions
Primary to secondary	2 x MOPP (Means of patient protection)	IEC60601-1 Ed 3
Primary to earth	1 x MOPP (Means of patient protection)	
Secondary to earth	N/A	

Application notes

Input derating

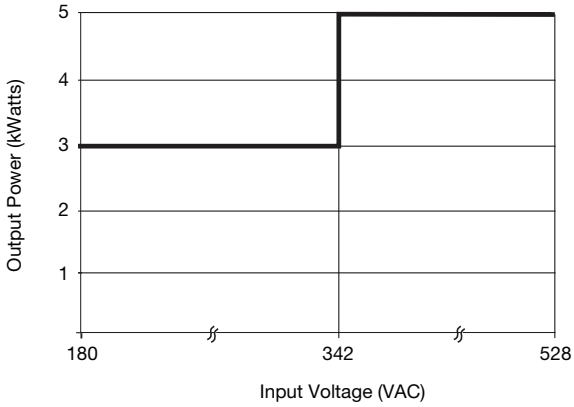

Output voltage programming

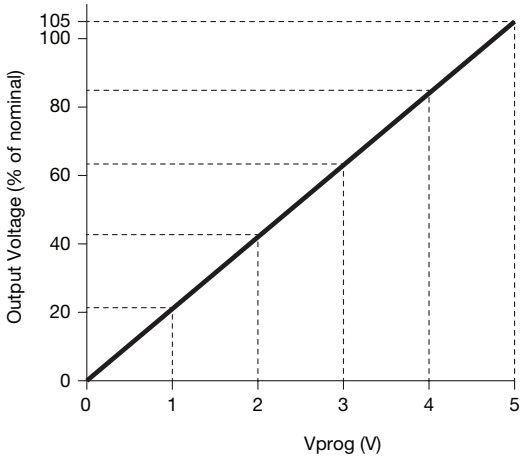

Output current programming

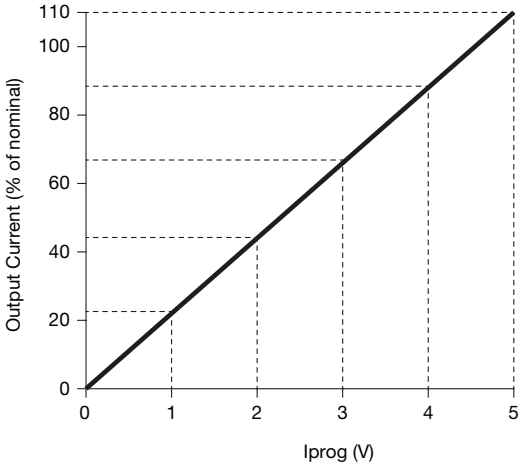

Signals & controls

Signal connections

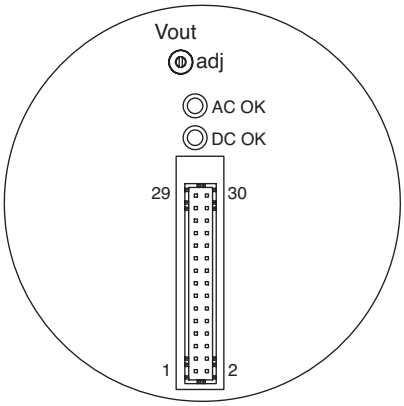

View A

J1 signal connector connections		
Pin	**Function**	**Description**
1	DCOK	Low means Vout is within range (Opto Isolated; Open Collector)
2	DCOK return	Return for DCOK (Opto Isolated)
3	Remote inhibit	High to Inhibit - uncommitted opto diode
4	Remote inhibit return	Return for Inhibit - uncommitted opto diode
5	A0	I^2C Device Address Bit (10kΩ pull up to 3.3V)
6	A1	I^2C Device Address Bit (10kΩ pull up to 3.3V)
7	A2	I^2C Device Address Bit (10kΩ pull up to 3.3V)
8	CANH	CAN Bus Communication using CANopen protocol
9	RS485_Y	RS485 Differential Serial Bus Communication
10	CANL	CAN Bus Communication using CANopen protocol
11	RS485_Z	RS485 Differential Serial Bus Communication
12	SGND	Signal Return
13	RS485_A	RS485 Differential Serial Bus Communication
14	I^2C SDA	I^2C (10kΩ pull up to 3.3V)
15	RS485_B	RS485 Differential Serial Bus Communication
16	I^2C SCL	I^2C Bus Clock (10kΩ pull up to 3.3V)
17	FAN_FAIL/TEMP WARNING	Fan Failure/Temp Warning Reporting (High means fan fails and/or overtemperature rating; 10kΩ pull up to 3.3V)
18	SYNC	Connect parallel units to synchronise output turn on
19	VPROG	0 - 5V to set Vout from 0 to 105%[1] (50.8 kΩ discharge resistor to SGND (2))
20	RS+	Postive Remote Sense (HPT5K0TS060 & HPT5K0TS100 only)
21	RS-	Negative Remote Sense (HPT5K0TS060 & HPT5K0TS100 only)
22	IPROG	0 - 5V to set Current Limit from 0 - 110% of rated current[1] (50.8 kΩ discharge resistor to SGND[2])
23	ISHARE	0 - 2.6V for current sharing of units in parallel
24	PMBUS_EN	Selecting Digital (open) or Analog (low) mode for VPROG & IPROG (10kΩ pull up to 3.3V)
25	ACOK	Low means AC is within range operating range (Opto Isolated; Open Collector)
26	ACOK return	Return for ACOK (Opto isolated)
27	5VSBY	5V/2A Standby
28	5VSBY	5V/2A Standby
29	5VSBY_RTN	5V/2A Standby Return
30	5VSBY_RTN	5V/2A Standby Return

Notes:

1. In analog mode, the default Vout & Iout settings are 0% when Vprog & Iprog are open circuit.
2. To activate analog mode, PMBus_EN must be pulled down to SGND or 5VSBY return. Default if left open is digital programming.

Signals & controls

DC OK

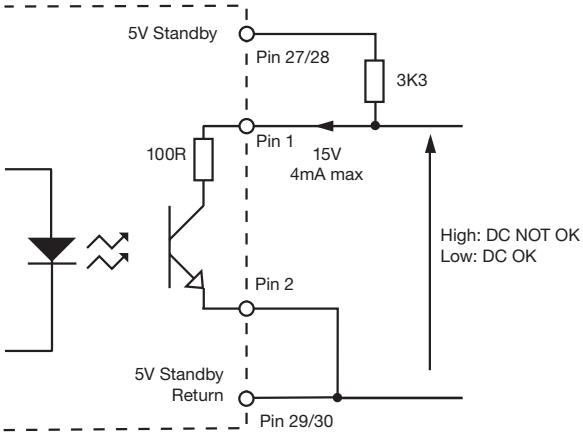

AC OK

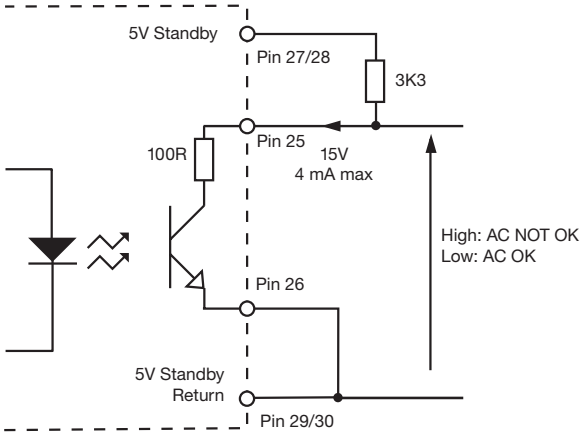

Fan fail/Temperature warning

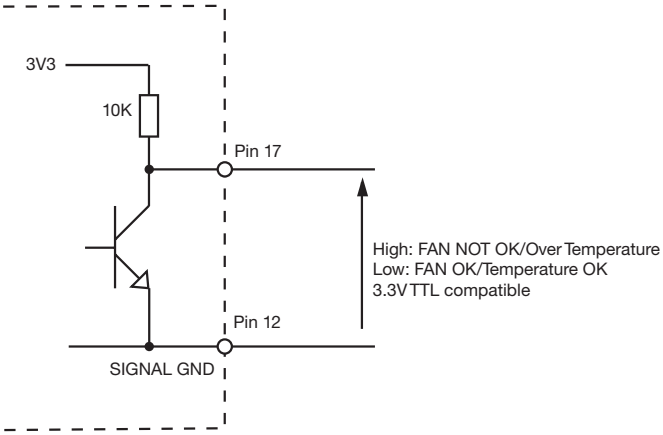

Inhibit

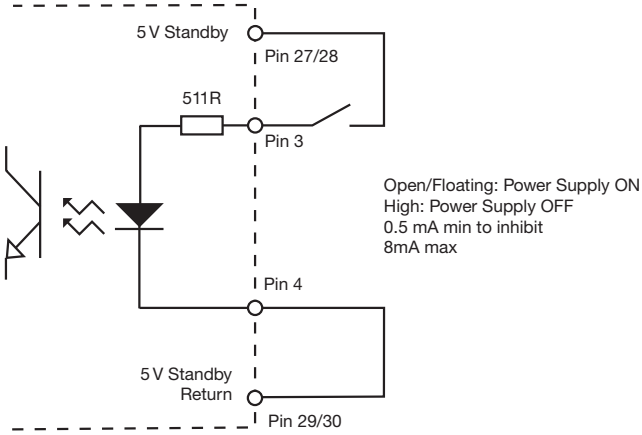

Current share

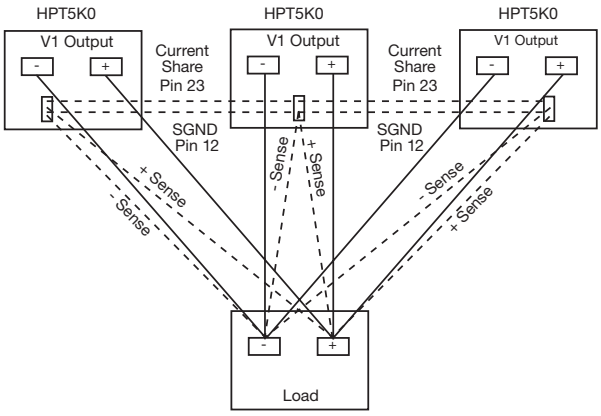

Up to 5 x HPT5K0 units

To synchronise output turn on from application of AC input, connect SYNC (pin 18) of parallel units together.

LED signals

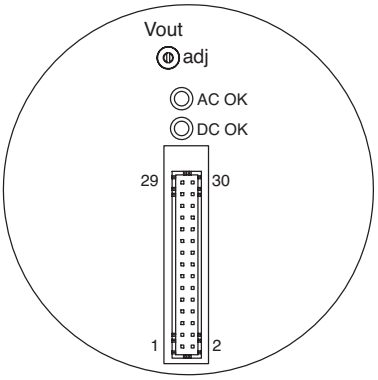

View A

Conditions	LED state		Signals			
	AC OK	DC OK	AC OK	DC OK	FAN _FAIL/ TEMP	Remote inhibit
AC input OK	ON	ON(3)	LOW	LOW	LOW	LOW
AC not present or too low	OFF	OFF	HIGH	HIGH	LOW	X(2)
AC present but out of range or PFC failure or no primary to secondary communication	Blink (0.2s ON, 0.2s OFF)	OFF	HIGH	HIGH	LOW	X(2)
Output over voltage	ON	OFF	LOW	HIGH	LOW	LOW
Current limit (Constant current response)	ON	Blink (0.2s ON, 0.2s OFF)	LOW	LOW or HIGH(3)	LOW	LOW
Fan failure/Thermal shutdown	ON	OFF	LOW	HIGH	HIGH(1)	LOW
Remote OFF	ON	Blink (1.0s ON, 1.0s OFF)	LOW	HIGH	LOW	HIGH
PMBus operation OFF	ON	Blink (1.0s ON, 1.0s OFF)	LOW	HIGH	LOW	LOW

Notes:

1. In case of fan failure, and/or Overtemperature, FAN_FAIL/Temp Warning signal will be set 10s before output shutdown.
2. Don't care / not applicable.
3. DC_OK LED is ON if Output Voltage >= VOUT_UV_FAULT_LIMIT, if Output Voltage < VOUT_UV_FAULT_LIMIT, the DC_OK LED will be OFF

Mechanical details

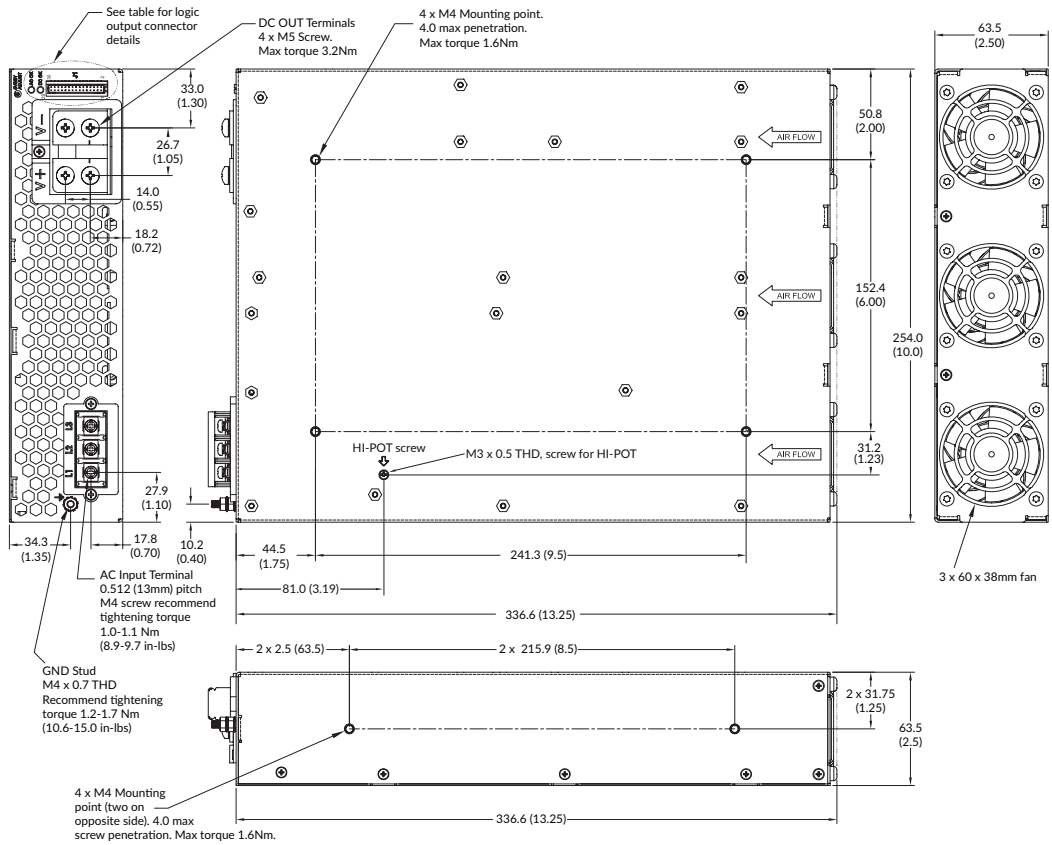

Notes:

1. All dimensions are in inches (mm).
2. Weight 5.7kg (12.5lb)
3. Signal Connector: P/N JST S30B-PHDSS (LF) (SN) or equivalent
   Mates with P/N JST PHDR-30VS or equivalent
   Contact: SPHD-002T-P0.5