BS,C ,201632,018	A	GEN. ST.	01	02	03	04	05	06	07	08	0D	50	60	70	80	90
		INT. ST.	10 11 12 13 14 18 20 31 32 33 34 38 39 40 42 43 44 45 46 48 56 70 72 73 ~~75~~ 76 81 ~~82~~ 83 84 88													

REV.	DATE	DESCRIPTION	BY	C'K'D'
A	14-09-01	CONVERSION REVISION 04	KN	

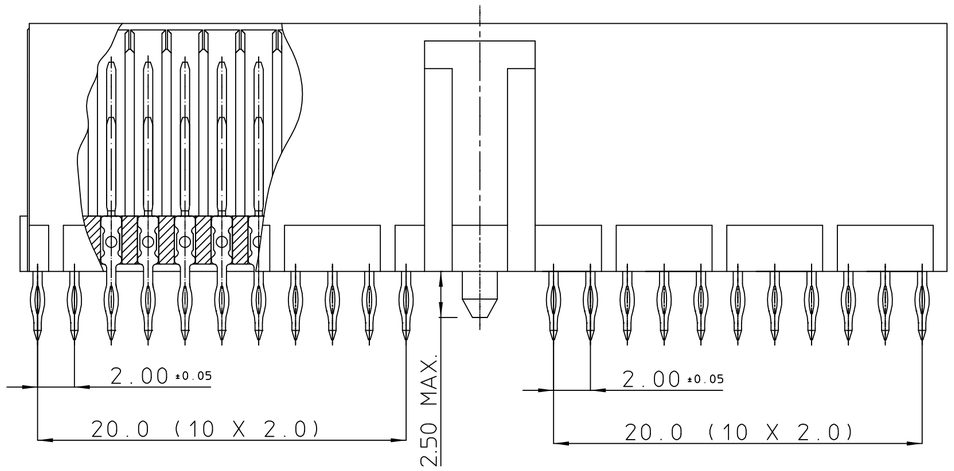

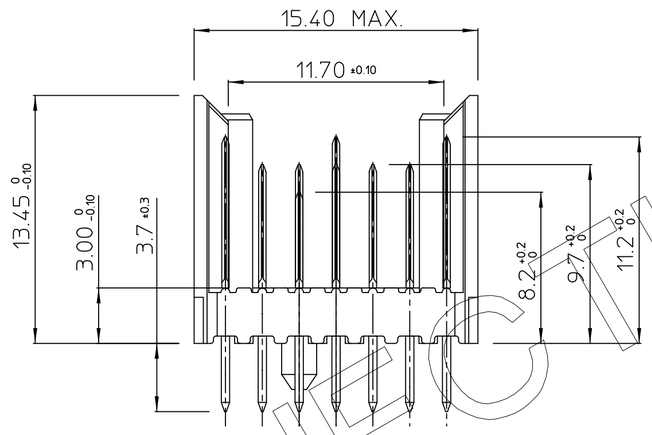

LAY-OUT
P.C.B.-HOLES

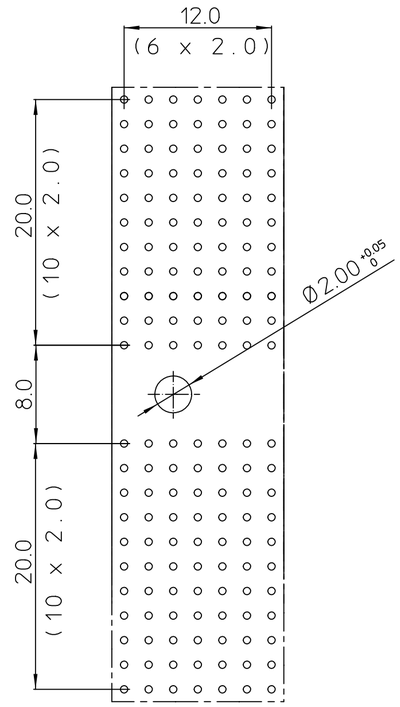

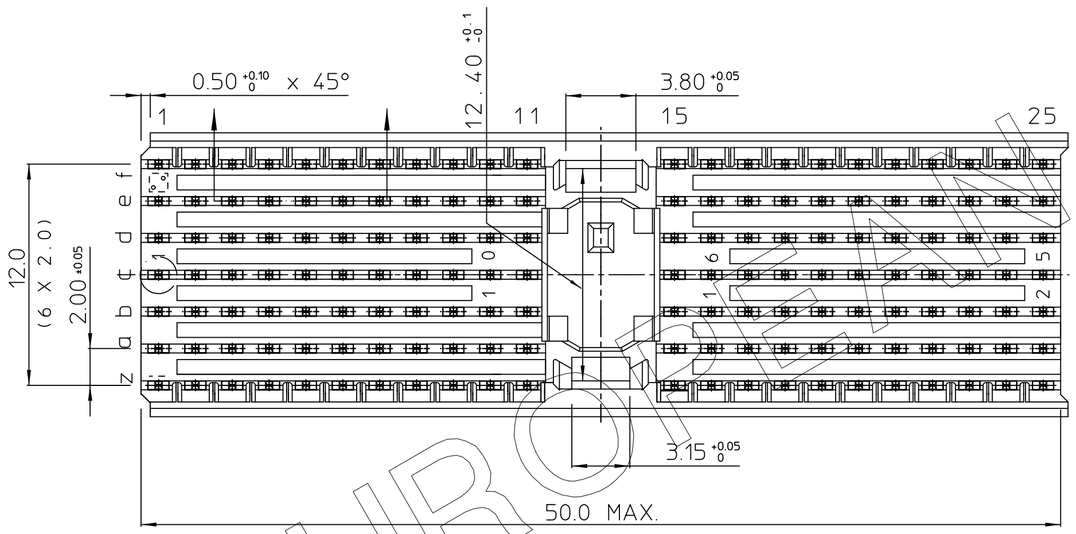

PERFORMANCE CHARACTERISTICS

CURRENT RATING : 1,5 A AT 20°C (FULLY LOADED)
1 A AT 70°C (FULLY LOADED)
RATED VOLTAGE : 500 V AC (CONT / CONT)
OPERATING TEMPERATURE : -55°C TO 125°C
CONTACT RESISTANCE : 20 mΩ MAX
INSERTION FORCE : 0.75 N MAX / CONT
EXTRACTION FORCE : 0.15 N MIN / CONT
INSULATION RESISTANCE : 10^4 MΩ MIN

CONTACT LAY-OUT

ROW Z,F ALL POS : MATING LEVEL 3 / SHORT TERMINATION

ROW A,B,E ALL POS : MATING LEVEL 2 / SHORT TERMINATION

ROW C ALL POS : MATING LEVEL 2 / SHORT TERMINATION
EXCEPT POS 10: MATING LEVEL 3

ROW D ALL POS : MATING LEVEL 2 / SHORT TERMINATION
EXCEPT POS 11: MATING LEVEL 1

NOTES

1. "--" PERFORMANCE LEVEL INDICATION: (SEE CAT.NR.)
   Z1= PL3 (SHORT) | GC= PL3 (REAR PLUG-UP)
   N9= PL2 | GF= PL2
   E9= PL1 | GL= PL1
2. THIS PRODUCT IS CSA APPROVED.
   THIS PRODUCT IS UL RECOGNIZED.

THIS IS OUR EXCLUSIVE PROPERTY. IT IS NOT TO BE COPIED, REPRINTED OR DISCLOSED TO A THIRD PARTY, NOR USED FOR MANUFACTURING WITHOUT OUR WRITTEN CONSENT, AND HAS TO BE RETURNED TO US IN CASE OF NO USAGE

DIT IS ONZE EIGENDOM EN MAG NOCH NAGEMAAKT, HERDRUKT, OVERGEMAAKT AAN DERDEN, NOCH VOOR FABRIKATIE GEBRUIKT WORDEN, ZONDER ONZE SCHRIFTELIJKE TOELATING. BIJ NIET GEBRUIK IS TERUGZENDING VERPLICHT.

MALE SIGNAL STRAIGHT PRESS-FIT-TO-BOARD CONNECTOR WITH SERVICECENTER (WIDE BODY)

1DEC ±0,2 1DEC
2DEC ±0,1 2DEC
ANGLES ±1° HOEKEN

WE RESERVE THE RIGHT TO CHANGE DIMENSIONS OR REQUIREMENTS WITHOUT PRIOR NOTICE.

ALL DIMENSIONS IN MM

ALLE AFMETINGEN IN MM

APPR.	DATE	SIGN.
DRAFT	16.05.94	W.Panis
CHECKED		
PROD. MGR.		
PR.ENG.MGR.		
PR.MGT.MGR.		

REFERENCES/REFERENTIES

MILLIPACS 2 / TYPE A / SHIELDED (25 POS.)

CAT. No. HM2P07PDG1A1--

FCI MECHELEN N.V.
A. SPINOYSTRAAT 8, 2800 MECHELEN

SCALE 3/1

BS,C ,201632,018 — DRAWING No.
CUSTOMER DRAWING
A — REVISION

EUROPRIMA
PROJECTION